BOSTON PUBLIC LIBRARY
3 9999 06656 626 4

Published May 18, 1943 Serial No. 46,912

# ALIEN PROPERTY CUSTODIAN

## EXTRACTION PROCESS

Willem J. D. van Dijck, The Hague, Netherlands;
vested in the Alien Property Custodian

Application filed October 26, 1935

This application is a continuation-in-part of my copending applications Serial No. 455,959, filed May 26, 1930, Serial No. 694,280, filed October 19, 1933, and Serial No. 669,580, filed May 5, 1933. This invention relates to an improved process for the separation of multi-component liquid mixtures, and particularly hydrocarbon mixtures, into more than two portions having different compositions by extracting the mixtures with selective solvents. The invention may be applied to the extraction of any multi-component mixture, but is especially useful in the extraction of petroleum fractions, such as gasoline, kerosene, Diesel fuel, gas oil, fuel oil, and various lubricating oils.

Such hydrocarbon mixtures are highly complex in character, and contain numerous hydrocarbons having widely different chemical structure and characteristics, such as anti-knock properties, burning qualities, stability against oxidation or sludge formation, viscosity index, specific gravity, refractive index, and the like. Such mixtures may, for example, contain hydrocarbons belonging to some or all of the following classes: Saturated straight chain or branched chain hydrocarbons, cyclo-paraffins or naphthenes with aliphatic side chains, unsaturated straight chain or branched chain hydrocarbons, aromatic hydrocarbons with aliphatic side chains, partially or wholly hydrogenated mono- or poly-cyclic aromatic hydrocarbons, and mono- or poly-cyclic aromatic hydrocarbons. These various hydrocarbons are polarizable to different degrees, and have different solubilities in polar liquids, such as sulfur dioxide, furfural, quinoline BB' dichloroethyl ether, etc.

At the present time such multi-component mixtures are separated into two portions by extracting them with a polar liquid as a selective solvent. The simplest form of extraction process involves merely the contacting of the liquid mixture with a selective solvent, in which the components of the mixture have different solubilities, followed by the separation of the phases by settling and decantation or by centrifuging. The solvent-poor phase, which contains the relatively less soluble components is known as the raffinate phase, while the solvent-rich phase, which contains the relatively more soluble components, is known as the extract phase. In the case of hydrocarbon mixtures the selective solvent, being a polar substance, dissolves the more highly aromatic or non-paraffinic hydrocarbons (i. e., the more polarizable hydrocarbons), while the more paraffinic hydrocarbons are obtained in the raffinate phase. The separation of the phases is generally effected by utilizing the difference in their specific gravities. The solvent or solvents may then be removed from either or both of the separated phases by any suitable method, such as distillation, or by washing them with suitable extracting agents, for example, as described in the application of Sijbren Tijmstra, Serial No. 20163, filed May 7, 1935, or by absorption, or by precipitation with chemical reagents, etc., to produce pure raffinate and extract.

When a more complete removal of the relatively more soluble components is desired, the mixture is contacted with the selective solvent in multiple extractions or in countercurrent. It now becomes possible to remove the more soluble component from the raffinate to any desired extent, provided that a sufficient number or stages or length of contacting zone is provided and/or a sufficient quantity of selective solvent is employed. To this removal of the more soluble component from the raffinate I have applied the term "elutrification." The degree of elutrification may often be further increased by employing non-selective diluents with the selective solvents. Processes of this type are described in the U. S. Patent No. 1,945,516, and in the application of Lindeke and Greensfelder, Serial No. 740,286, filed August 17, 1934. These diluents are of the nature of the components preferably soluble in the selective solvents employed, and must be capable of being separated from the mixture being treated outside of the extraction zone, as by distillation or washing, etc. As an improvement on this process, the diluent may be removed at one or more points in the course of the extraction, as described in my co-pending application Serial No. 11,647, filed March 18, 1935. Although the countercurrent treatment of such mixtures will permit a mixture to be elutrified to any desired extent, it will not produce an extract which is entirely free from the raffinate.

A pure or purer extract may be produced by "deraffinating" the extract or the extract phase. By this term I mean any process which is effective in removing the relatively less soluble component from a liquid composition. Deraffiination of the extract phase may be effected by washing the extract phase, preferably in countercurrent, with a second solvent which, in the presence of the extract phase, is not entirely miscible with the main selective solvent, as described, for example, in my copending application Serial No. 455,959, filed May 26, 1930; or with a backwash, as described in my copending applications Se-

rial Nos. 669,580 and 27,390, filed May 5, 1933, and June 19, 1935, respectively; or the extract phase may be passed through a chilling zone to lower the solvent power of the selective solvent, as described in my copending application Serial No. 694,280, filed October 19, 1933; or by removing a portion of the solvent from the extract phase and separating from it raffinate contained therein, as described in the application of Frank Cutting, Serial No. 22,541, filed May 21, 1935; or by combinations of these steps.

The separation of multi-component mixtures into more than two portions by selective solvents has heretofore been effected either by further extracting one of the products of an extraction process or by chilling the extract phase in a series of consecutive stages and withdrawing a separated phase at each step. The former expedient involves the running of several extraction operations; while the latter is incapable of producing sharply cut intermediate products because the withdrawn portions are in equilibrium with the liquid in the extraction apparatus, and contain undesirable quantities of components which it is desired to remove in another product of the process.

It is an object of my invention to provide a process for producing a number of closely fractionated intermediate products in a single extraction process, thereby improving the quality of the raffinate and/or the extract. It is another object of my invention to provide a process for separating complex mixtures into a number of products containing substances of different chemical constitution and/or physical properties. Other objects of my invention will be apparent from a reading of the following specification and from the accompanying drawings, it being understood that although I have described certain specific embodiments thereof, and have shown certain forms of apparatus suitable for carrying out the process, my invention is not restricted either to the particular embodiments described or to the apparatus illustrated, but may be practiced in many other forms without departing from the scope and spirit of the invention.

In accordance with my invention I extract a multi-component mixture in a countercurrent manner, employing either an elutrification zone, or a deraffinating zone, or both, preferably in a continuous countercurrent treater, such as a system of series of agitators or mixers and settling chambers, or a tower provided with perforated partitions or packing, or any other means for effecting the countercurrent contact of liquids, although my process may be carried out in a discontinuous manner. At one or more points in the process I separate out a portion of the counterflowing liquids as side streams and either withdraw such streams as a whole or subject the side streams either to an elutrification or deraffination treatment, withdraw the elutrified or deraffinated side streams as intermediate products, and return the residual portion of the side streams to the extraction process, preferably near the point or points at which they were separated from the process.

In accordance with the invention it is possible to withdraw either a solvent-rich or a solvent-poor phase, or a combination of the two as a side stream, thereby permitting a wide choice of side stream compositions. In the case of a packed tower, the side stream will often consist of a mixture of both phases present in the process at the point at which the side stream is separated. In this situation it is preferable to run the separated stream through a settling zone or centrifuge to separate it into two phases, and to treat and/or withdraw from the process only one of these phases as the side stream, the other phase being returned to the extraction process; a portion of the latter phase may be treated together with the first phase. Alternatively, the latter phase may also be treated separately as an additional side stream.

Although either phase may be separated from the extraction and any phase may be treated either to elutrify it or to deraffinate it, depending upon the nature of the intermediate product desired, preferably I withdraw a portion of the solvent-rich or extract phase as a side stream from the elutrification zone of the process, and deraffinate this side stream to produce the intermediate product. In extraction processes employing a deraffination zone, I withdraw a portion of the solvent-poor or raffinate phase as a side stream from the deraffination zone of the main process, and preferably elutrify it to produce the intermediate product. In extraction processes having both elutrification and deraffination zones, I may withdraw side streams from either or both of these zones.

The process of my invention is more fully described below, with reference to the drawings, in which Figure 1 is a diagrammatic elevation view, partly in section, showing one form of apparatus suitable for carrying out my invention; Figures 2 and 3 are similar diagrams, showing two modified forms of apparatus for treating the side streams; Figure 4 is a plan view taken through the horizontal midsection of the distributing nozzle; and Figure 5 is a side elevation, partly in section, of the distributing nozzle.

Referring to Figure 1, A and B are tanks having circular cylindrical walls or tank shells **20** and horizontal partitions dividing said tanks into sections, hereinafter referred to as settling chambers **1** to **7** and **11** to **17**, each provided with an inlet, such as distributing nozzle **8**, preferably located so that their center lines all lie in the same vertical plane, but alternately situated on opposite sides, and spaced approximately midway between the partitions. Each settling chamber is provided with two outlet conduits **9** and **10** placed near the top and the bottom of each chamber, respectively. The outlets in each chamber are placed diametrically or substantially diametrically opposite the feed inlet or distributing nozzle. Each distributing nozzle is connected with an agitator or mixer, designated on the drawing by reference numerals **21** to **27** and **31** to **37**, preferably placed at a short distance from the outer wall of the settling chamber, and in which the liquids employed in the process are intimately contacted.

The distributing nozzles **8** are shown in detail in Figures 4 and 5. Each nozzle is connected to a flat, rectangular plate **18**, which is affixed to a support **19** carried by the circular tank shell **20**. The support **19** is preferably shaped to have an elongated rectangular opening through which the distributing nozzle can be inserted and withdrawn. The outer side of the plate **18** is provided with a flanged nipple **28** for connecting the nozzle with a feed conduit. A flange **29** on the inside of the plate **18** has an elongated rectangular cross-section and carries two substantially horizontal fan-shaped plates **30**, which are interconnected by a number of vertical, diverging partitions **38**. The distance between the two substan-

tially horizontal plates 30 decreases gradually, so that the vertical distance at the outer edge is about one-half of the vertical distance at the flange 29.

The channels formed between the fan-shaped plates and the partitions have a rectangular cross-section, the width of which gradually increases, and the height of which gradually decreases in the direction of flow. The purpose of this construction of the nozzle is to distribute the feed liquid evenly in a horizontal plane. The small vertical dimension of the nozzle at its orifice as compared to the height of the settling chamber insures a proper distribution of the feed into the settling chamber, and aids in the stratification of the feed mixture therein.

Another feature of the construction shown is that, it effectively reduces the turbulence within the settling chambers and permis rapid separation of liquid phases. As a further means for avoiding turbulence within the settling chamber, guide partitions, such as vertical baffles, may be installed therein.

When all of the settling chambers are filled with the liquids being contacted, the pressures on the opposite sides of the horizontal partitions are nearly equal and the partitions are but lightly stressed. Therefore, these partitions may be constructed of relatively thin plates.

One of the intakes of each of the mixers 21 to 26 and 31 to 36 is connected to the upper outlet 9 of the next lower settling chamber by a conduit 39 and one of the intakes of each of the mixers 22 to 27 and 32 to 37 is connected to the lower outlet 10 of the next higher settling chamber by a conduit 40 and valve 41. If desired, any or all of the mixers 22 to 27 and 31 to 37 may be provided with chilling apparatus 42 to 47 and 51 to 57, respectively, and all or a portion of the liquid passed through them by closing the valves 41. The mixer 31 is connected to the outlet 10 of the settling chamber 7 by a conduit 48, and the mixer 21 is connected by a conduit 49 to a source of a selective solvent 50.

The upper settling chambers in each tank are provided with overflow control devices 58 and control valves 59 for regulating the withdrawal of liquids from the respective chambers 1 and 11. The outlet 9 in the zone 11 is connected through its overflow device 58, a valve 60 and conduit 61 to the mixer 27. This mixer is also connected by conduit 62 to the supply of liquid to be extracted. Suitable pumps, control valves, and auxiliary equipment, not shown, may be provided to cause the circulation of the liquids in the manner described below. In the following description it has been assumed that the extract phase is heavier than the raffinate phase with which it is in equilibrium. However, the particular apparatus and the method of this invention are just as effective where the raffinate phase is the heavier of the two, the required alterations in flowing liquids through the extraction system to be obvious to those skilled in the art.

The extraction apparatus shown, is adapted to effect both the elutrification of the raffinate phase and the deraffination of the extract phase, it being understood that my invention may be practiced although either of these operations is omitted from the process.

In operation, the liquid mixture to be extracted is continuously supplied through conduit 62 to the mixer 27, mixed with the extract phase from the upper adjacent chamber; the resulting mixture separates in the settling chamber 7 into two liquid phases, the raffinite phase being withdrawn through the upper outlet 9, and the extract phase through the lower outlet 10. The raffinite phase thus produced is elutrified by being extracted in counterflow with the selective solvent supplied through conduit 49, as shown in the drawing, the completely elutrified raffinate phase being withdrawn from the chamber 1 through overflow device 58 and conduit 63 and introduced into a separating apparatus 64 where it is separated into a solvent portion and a raffinate portion, which portions are withdrawn at 65 and 66, respectively. The apparatus 64 may be a distilling apparatus, or any other type of washing, adsorption, or precipitation apparatus adapted to remove the solvent from the raffinate. In this operation, the extract phase from each settling chamber may be fed directly into the mixer of the next lower settling chamber through the valves 41, so that the temperature is substantially the same throughout the several stages of the elutrification zone. I have, however, found that a more efficient elutrification can be effected by maintaining progressively decreasing temperatures in the several stages or chambers in the direction of flow of the solvent. This may be effected by closing or throttling the valves 41 and chilling the extract phases flowing between settling zones. For example, in extracting lubricating oil with furfural as the selective solvent, I may employ a temperature of 140° C. in the top chamber 1 and a temperature of 94° in the bottom chamber 7, the temperatures in the intermediate chamber being at a uniform gradient.

If elutrification is not desired, as when the raffinate formed in the settling bottom chamber 7 is of the desired composition, this raffinate phase may be introduced directly into the solvent separator 64 by a conduit not shown, and the selective solvent from the tank 50 may be fed directly into the mixer 27.

The extract phase withdrawn at 48 may be deraffinated by treatment in accordance with any of the methods already mentioned in this specification. I have indicated certain of these modes of treatment in the drawing in connection with the tank B, it being understood that my invention may be practiced with any one of them, or with combinations of any or all of them.

According to one method of deraffinating, the extract phase from 48 is contacted, preferably in a countercurrent manner, with a second solvent for the portion or component of the feed mixture which is not preferentially soluble in the first solvent, and which is not completely miscible with the selective solvent at the temperature of treatment and in the presence of the feed mixture. To this purpose the second solvent may be supplied through conduit 67 to tank B and passed therethrough and through the corresponding mixers in countercurrent to the extract phase from the conduit 48. The secondary raffinate phase produced in this treatment is withdrawn from the top of the chamber 11 and may be returned to the mixer 27 of tank A through conduit 61. If the valve 60 is open, the second solvent will likewise be returned to the tank A, and may then be recovered from the final raffinate phase by treatment in the apparatus 64, the second solvent being withdrawn at 68. It is, however, often desirable to remove all or at least a portion of the second solvent from the secondary raffinate phase before returning it to the tank A. This may be effected by closing or throttling the valve 60, opening the valve 69, and passing the

secondary raffinate phase through solvent separator 70, from which the second solvent may be withdrawn at 71. The deraffinated extract phase is withdrawn from the bottom chamber of tank B through a valve 72 and a conduit 73 and introduced into solvent separator 74, which may be similar to the apparatus 64. The two solvents are withdrawn separately at 75 and 76, respectively, and may be recycled for the treatment of additional quantities of the feed mixture. The extract is withdrawn at 77, and is a product of the process.

According to another mode of deraffinating the extract phase from tank A, not employing a second selective solvent, the extract phase from the conduit 48 is passed through tank B and corresponding mixers countercurrently to a portion of the final extract phase withdrawn through 73 and from which all or a portion of the selective solvent has been removed. This may be effected by opening a valve 78 in conduit 79. If desired, this may be diluted with selective solvent by admitting a portion of the extract phase from the conduit 73 through a valve 80. This treatment, known as the "backwash" process, is more fully described in my application Serial No. 669,580.

If desired, the above described backwash treatment may be combined with the previously described treatment with an auxiliary solvent, this combination being more fully described in the copending application of Sijbren Tijmstra, Serial No. 759,185, filed December 26, 1934, it being understood that the various features there described may be applied to my process.

In either of the above operations the settling chambers 11 to 17 may be operated at the same temperature. I have, however, found it advantageous to make use of the chillers 51 to 57 and to maintain a negative temperature gradient in the direction of flow of the extract phase, as described in connection with the tank A. For example, in a furfural extraction of lubricating oil, using a backwash, I may employ a temperature of 86° C. in the chamber 11 and a temperature of 40° C. in the chamber 17, with a uniform gradient in the intermediate chambers.

It is, moreover, possible to deraffinate the extract phase in the tank B without employing either an auxiliary or second solvent or a backwash, but by gradual cooling of the liquids flowing through tank B at an effective rate, often greater than the one indicated in the preceding paragraph, whereby the extract phase entering tank B from the conduit 48 is caused to separate into secondary raffinate and secondary extract phases.

Still another mode of deraffination comprises the removal of a portion of the selective solvent from the extract phase flowing between the settling chamber 11 to 17 and between 7 and 11, the residual portions of the extract phases being chilled before being introduced into the settling chambers if the solvent separation involved the addition of heat. If desired, a temperature gradient may also be employed with this mode of operation.

If the deraffination of the extract phase is not required, as when the extract phase from the bottom of tank A is of the desired purity or composition, the extract phase from the conduit 48 may be introduced directly into the apparatus 74.

To produce the intermediate product according to my invention, I withdraw a portion of one of the phases flowing between the several stages or settling chambers of my process as a side stream, either deraffinate or elutrify the side stream, withdraw the deraffinated or elutrified side stream as the intermediate product, and return the residual portion of the side stream to the process. As already mentioned, although I may withdraw either a raffinate or an extract phase from any part of the extraction process, I prefer to withdraw an extract phase from the elutrification zone, i. e., from either of the settling chambers of the tank A, and/or to withdraw a raffinate phase from the deraffination zone, i. e., from the settling chambers of the tank B. One or more of such side streams may be removed from either or both of these zones, at different points of the process, but I have for convenience shown only the withdrawal of a single side stream from each of these zones. The residual portions of the side streams are preferably returned to the extraction process at a point at which the composition of the phases most nearly approaches the composition of the returned portoin of side streams. The exact point at which this composition occurs depends upon the nature and intensity of the treatment to which the side stream is subjected, and it is understood that while I have indicated certain preferred points for the return of these residual portions of the side streams, my invention is not limited to the specific arrangements shown, since these portions may be returned either to the same stage or to a higher stage or to a lower stage than the stage from which the side stream was withdrawn.

Referring again to Figure 1, a portion of the extract phase which is withdrawn from the lower outlet 10 of one of the settling chambers in tank A, such as chamber 3, is fed through a conduit 85 and a valve 86 and introduced as a side stream into a deraffinating apparatus 87. If desired, the side stream may be passed through the chillers before treatment in the apparatus 87. The deraffinated side stream may be withdrawn at 88 and introduced into a solvent separator 89, from which the intermediate product may be withdrawn at 90 and the solvent at 91. The complementary raffinate phase is withdrawn from 87 at 92 and may be returned to the next higher chamber through a conduit 93 and a valve 94.

The apparatus 87 may be of any desired type, and may, for example, be similar to the tank B, provided with suitable settling chambers, and may be operated in accordance with any of the modes of operations described for the tank B. I may also employ a packed tower, as shown in Figure 1 of the drawing. This packed tower may be provided with suitable chilling means, such as cooling coils located within the tower, or cooling elements 95, as shown. Moreover, a single settling zone may be employed instead of the plurality of stages shown in connection with the tank B or the packed tower as shown. If an auxiliary solvent is to be employed, it may be introduced through an inlet 96. This auxiliary solvent may be the same as or different from the second solvent which is employed in the tank B. In either case, this auxiliary solvent is preferably separated from the complementary raffinate phase before returning the latter to the tank A, as by closing the valve 94, opening a valve 97, and passing the raffinate phase through a separator 98, the complementary raffinate being withdrawn at 99 and the auxiliary and selective solvents at 100 and 101, respectively. If desired, a portion of the selective solvent may be returned with the complementary raffinate by operating the apparatus 98 to produce at 99 a liquid which contains

both the raffinate and the selective solvent, or by reintroducing the separated selective solvent into the complementary raffinate phase by means of a conduit 102 and a valve 103. When an auxiliary solvent is employed, the apparatus 89 may be operated to cause the removal of the latter at 104. In the apparatus shown in Figure 1 the complementary raffinate or raffinate phase (i. e., the residual portion of the side stream) is preferably returned to a mixer connected with a settling chamber higher than chamber 3, as, for example, the mixer 22, as shown, but may be returned to the mixer 23 or to any other mixer of the process.

In Figure 2 I have illustrated an alternative form of deraffinating apparatus. In this apparatus, the side stream in the conduit 85 is first passed through a solvent separator 105, wherein a portion, but not all, of the selective solvent is removed from the side stream at 106; the resulting solvent-poor side stream is withdrawn at 107, passed if desired, through chiller 108, and then into settling chamber or centrifugal separator 109, where it is allowed to stratify or is separated into extract and raffinate phases; chiller 108 may be by-passed by means of conduit 110 provided with valve 111. The temperature of the solvent-poor side stream, which is introduced into the chamber 109 may be the same as or slightly higher than that of the original side stream in the conduit 85, but is preferably somewhat lower. The extract phase from the chamber 109 is withdrawn at 112, and may be further freed of selective solvent and further treated in the manner described above, or may be introduced directly into the apparatus 89, similar to the apparatus 89 in Figure 1. The raffinate phase from the chamber 109 is withdrawn at 113 and returned to the process, either directly, or after admixture with all or a portion of the solvent from 106, the valve 114 being employed to control the admixing. This raffinate or raffinate phase is preferably returned to the mixer 23 or to a mixer connected with a chamber lower than the chamber 3, although it may be returned to any other mixer, preferably to the mixer containing liquids having a composition most nearly resembling that of the returned raffinate.

The method of operation illustrated by Figure 2 is particularly suitable when extraction in the tank A is carried out in the presence of a non-selective diluent, such as an aromatic hydrocarbon employed in mineral oil extractions, flowing concurrently with the selective solvent. In this case, the solvent separator 105 is used to remove from the side stream either a part or whole of the said diluent, thereby causing the separation of the residual mixture in the phase separator 109 into two liquid layers which are withdrawn through conduits 112 and 113 and treated, if desired, in the manner already described.

Considering next the treatment of a side stream from the deraffinating zone, i. e., from the tank B, and referring again to Figure 1, a portion of the raffinate phase which is withdrawn from the outlet 9 of the settling chamber 15 may be fed through a conduit 115 and a valve 116 and introduced into an elutrifying apparatus 117. A selective solvent, which may be the same as that contained in the tank 50, or which may have different solvent characteristics, is introduced into the apparatus 117 from a tank 133 through a conduit 134, and removes the more soluble components from the side stream. The selective solvent is preferably contacted with the side stream in a countercurrent manner. The elutrified side stream may be withdrawn at 118 and introduced into a separating apparatus 119, from which the intermediate product may be withdrawn at 120 and the solvent at 121. The complementary extract phase is withdrawn at 122 and may be returned to the process through a conduit 123 and a valve 124.

The apparatus 117 may be of any desired type, and may, for example, be similar to the tank A, and provided with suitable settling chambers, and may be operated in accordance with any of the modes of operation described for the tank A. I may also employ a packed tower, as shown in Figure 1 of the drawing. The packed tower may, if desired, be provided with suitable chilling means, such as cooling coils or jackets, not shown. Moreover, a single elutrifying stage may be employed. It may, however, be provided with a deraffinating zone 125. If an auxiliary solvent is employed in this deraffinating zone, it may be introduced through an inlet 126. This auxiliary solvent may be the same as, or different from that which is introduced at 67. If desired, this auxiliary solvent may be separated from the complementary extract phase before returning it to the tank B by closing the valve 124 and opening a valve 127, and passing the extract phase through a separating apparatus 128, the complementary extract phase being withdrawn at 129, and the auxiliary solvent and selective solvent at 130 and 131, respectively. When an auxiliary solvent is employed, the apparatus 119 may be operated to cause the removal of the latter at 132.

The complementary extract or extract phase produced at 117 is preferably returned either to the mixer 35 as shown, or to the mixer 36 or to a mixer connected with a settling chamber higher than chamber 15, depending upon the quantity and nature of the solvent used in the apparatus 117, and the compositions of the complementary extract phase and the liquids in the various mixers. This phase may, however, also be returned to a mixer lower than the mixer 36.

In Figure 3 I have illustrated an alternative form of deraffinating apparatus. In this apparatus, the side stream from the conduit 115 is passed through a chilling device 135 and fed into a settling chamber or centrifugal separator 136, where the chilled side stream is allowed to stratify, or is separated into extract and raffinate phases. The extract phase is withdrawn at 137 and may be returned to the process, either directly, or after being freed of a portion of its solvent in a manner not shown. This extract phase is preferably returned also to the mixer 35 or 36, or to a mixer connected with a settling chamber lower than the chamber 16, although it may in certain cases be desirable to return it to a higher settling chamber, as determined by the composition of the extract phase. The raffinate phase may be withdrawn at 138 and passed through a solvent separator 139, from which the solvent is withdrawn at 140 and the intermediate produce is withdrawn at 141.

When treating hydrocarbon oils, such as lubricating oils, kerosenes, gasolines, naphthas, etc., my invention may be used with any suitable solvent or solvent mixtures, such as: sulfur dioxide, phenol, nitrobenzol, ethanol amines, furfural, BB' dichloroethyl ether, quinoline, isoquinoline, nitrogen bases, ether alone or together with other solvents, such as alcohols, ketones, etc. These can be used in conjunction with auxiliary sol-

vents which possess a solvent power for the more paraffinic hydrocarbons, such as propane, pentane, light naphthas, etc., although my invention is not restricted to the use of any particular solvent or solvents.

The present invention may, moreover, be applied to the treatment of all kinds of hydrocarbon oils, either natural or synthetic, e. g., those obtained by polymerization, hydrogenation, or cracking. Apart from carbon and hydrogen they may contain other elements, such as sulfur, ntrogen, oxygen and/or metals, which may be termed foreign elements. The hydrocarbon oils may contain sulphonic acids, naphthenic acids, phenols, or metal compounds of these substances. As a rule, the more polarizable hydrocarbons, and the hydrocarbon derivatives containing the foreign elements in their molecule will pass into the phase rich in the first solvent used, i. e., the selective or polar solvent. In those cases the solvent rich or extract phase, when deraffinated, will contain naphthenic and/or aromatic constituents and compounds containing the foreign elements, e. g., sulfur compounds. In such cases the intermediate products obtained from the side streams from the tank B can be substantially freed from the compounds containing these foreign elements.

The invention also is not limited to extraction of hydrocarbons, but can be applied in extracting any solution of a plurality of substances, which can be separated from each other by solvent extraction, the selection of suitable solvents and diluents being within the skill of those skilled in the art. Thus, refining of vegetable oils by solvent extraction to produce several products of different grades, or the concentration of lower aliphatic acids by extraction with various solvents, such as some ethers or esters, particularly amyl acetate, and the production of several products containing different acids, and many other solvent extraction treatments are subject to the process of this invention.

As used in the present specification, the term "extraction zone" or "extraction apparatus" is used to designate the aggregate of all zones or stages, or the aggregate of all units of an apparatus adapted to effect the separation of a liquid mixture into several portions of different compositions with the aid of a selective solvent. Such a zone may include either an elutrifying zone, or a deraffinating zone, or both, these terms having been defined in the foregoing specification. Thus, in referring to Figure 1 of the drawing, the term "extraction zone" includes both tanks A and B. The term "component" is not limited to pure substances but includes groups of substances having generally similar solubility characteristics with respect to a particular solvent. A component is said to be pure if it does not contain any portion of a substance which should be present only in another component. In the present specification there is no difference in meaning between the words "solution," "liquid mixture" and "liquid solution."

WILLEM J. D. VAN DIJCK.

PUBLISHED
MAY 18, 1943.
BY A. P. C.

W. J. D. VAN DIJCK
EXTRACTION PROCESS
Filed Oct. 26, 1935

Serial No.
46,912
2 Sheets-Sheet 1

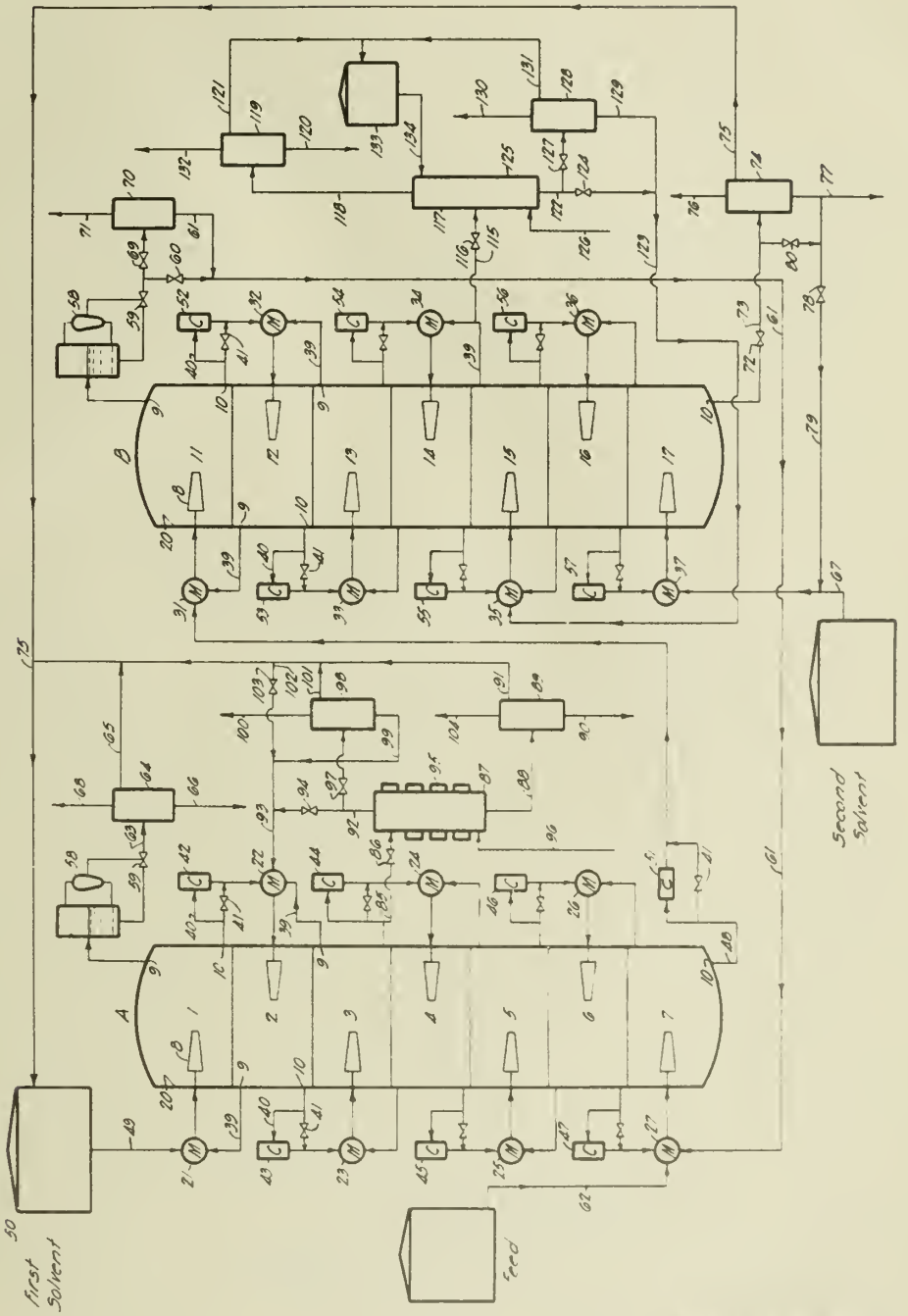


FIG 1

Inventor: Willem J. D. van Dijck
By his Attorney

Digitized by the Internet Archive
in 2014

https://archive.org/details/uspatentapplicat41unit

PUBLISHED
MAY 18, 1943.
BY A. P. C.

W. J. D. VAN DIJCK

EXTRACTION PROCESS

Filed Oct. 26, 1935

Serial No.
46,912

2 Sheets-Sheet 2

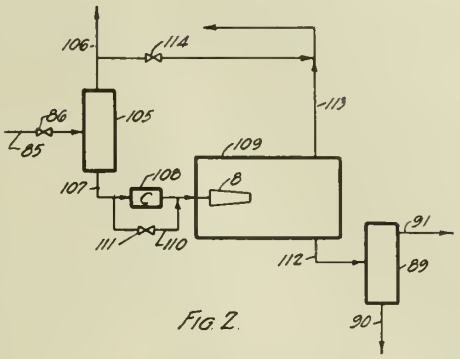


FIG. 2.

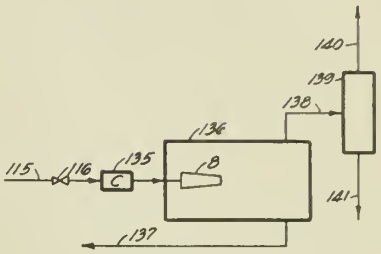


FIG. 3.

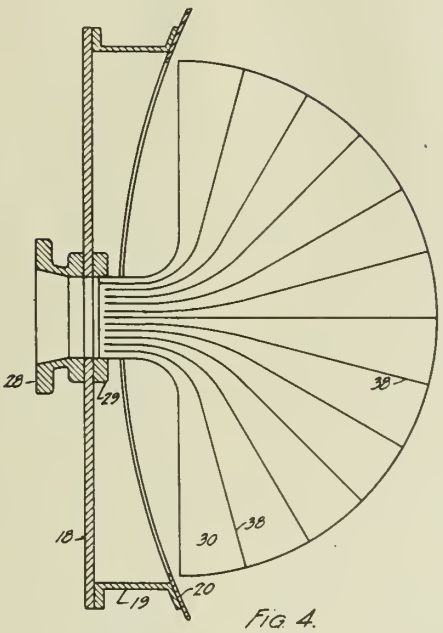


FIG. 4.

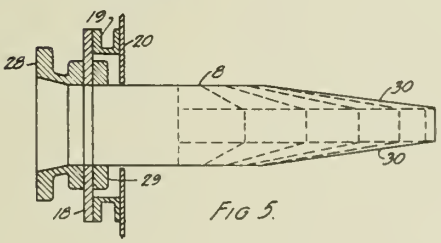


FIG 5.

Inventor: Willem J. D. Van Dijck

By his Attorney: Barton

Published May 18, 1943 Serial No. 108,062

# ALIEN PROPERTY CUSTODIAN

## PICTURE TRANSMISSION SYSTEMS

Pierre Marie Gabriel Toulon, Puteaux, France;
vested in the Alien Property Custodian

Application filed October 28, 1936

The invention has for object a new method of exploration adapted for the transmission to a distance of images of moving or stationary objects which is applicable to transmission as well as to reception.

In the television systems hitherto known, the scanning was ensured either by a rotating mechanical member (collector) or by a moving electronic beam. According to the invention, the exploration of a device having multiple elements, separated or contiguous, is effected without it being necessary to make use of such moving connecting members.

The scanning according to the invention is ensured in such a manner that the characteristic of each element or of the electric circuit which is associated therewith varies in regard to time and that, consequently, the element comes into action periodically (for instance, once during the total time of exploration of a complete image). The multiple elements will generally be arranged side by side and will form a continuous or multicellular surface or line. The device scanned may form part of the electric vision circuit, and in this case all the elements will be inserted simultaneously in the circuit; this device may also play the part of an optical distributor. In the former case, the modification of the characteristics of the elements consists, for instance, in variation of their sensitivity or of the sensitivity of the electric circuits which are connected to these elements.

The scanning may also be ensured by the combination of several superposed multi-cellular devices (such as lines or surfaces), the elements of which receive a different sensitisation.

The modification of characteristics of each element or of the electric circuit which is associated therewith may be effected either mechanically or electrostatically or electromagnetically, or by an auxiliary voltage or current or, alternatively, an auxiliary high-frequency wave, etc. This modification may be the consequence of, or alternatively may consist in, either a variation in tuning of the element or of its circuit or a change in the mean potential of the element. This modification may take the form of a variation of the mechanical, electrical, magnetic, optical properties etc., of the element or of its circuit. The modification of the sensitivity of the element or of its circuit may be obtained mechanically; preferably, it is ensured electrically, starting from a distribution of current or of auxiliary voltages (distributor) in which the value of the current or the voltage, its form or its direction, ensures the distribution between the elements. The distribution of the sensitivity of the elements may be effected in sequence or may be effected in any other manner, for instance, by missing a line of exploration (interlacing scanning) or, alternatively, by passing from one point to another, distant from the former and located on the same line or on a different line etc.

The distribution of the auxiliary current (playing the part of distributor) may be obtained, for instance, by means of thyratron releasers or, alternatively, by means of a transformer having a rotating field etc. This distribution may also be complex, that is, may be effected by the addition of several voltages proceeding from different lines. It may also be effected in such a manner that the modification of an element initiates the modification of the element which follows it and may, moreover, react on the element which precedes it.

The element of the device scanned (or its circuit) may be constructed in such a manner that the effect produced on it is prolonged.

The object and the mode of execution of the invention will be more readily understood from the accompanying drawings which illustrate several particular cases by way of example.

Fig. 1 illustrates the general diagram of an exploring system in accordance with the invention, in which all the elements of the circuit are excited simultaneously by the vision current, and sensitised successively by a distributor.

Fig. 2 diagrammatically illustrates a modification of Fig. 1, according to which the sensitisation is effected by the action on the transmission lines connecting the receiver to the elements.

Fig. 3 illustrates an application of the diagram according to Fig. 2. In order to ensure the transmission, use is made of high frequency, the resonance conditions of lines being modified.

Fig. 4 is another application of the scanning according to Fig. 2, according to which the characteristics of lines are statically varied owing to the use of a tube containing rarefied gas, the dielectric constant of which is modified.

Fig. 5 is another modification of the application of scanning according to Fig. 2.

This figure shows how the successive sensitisation of the circuits associated with the various elements of the surface can be effected with the aid of a magnetic field. This figure also illustrates a connection which owing to the use of a rectifier associated with a circuit offering a certain time constant, allows of prolonging the duration of the response of the electro-optical element, after its

excitation, and of extending it particularly over the whole of the period which elapses between two consecutive scannings.

Fig. 6 illustrates the general diagram of another modification of the invention in which the surface with multiple elements only performs an optical distributing function while an additional device receives the modulation.

Fig. 7 illustrates the application of the principle of scanning according to Fig. 6 to the scanning of the various elements of a line.

This figure shows how it is possible to obtain a transparent spot which is displaced in sequence on an opaque line.

Fig. 8 illustrates the application of the same method to the scanning of an entire surface by means of two relcasers.

Figs. 9, 10 and 11 relate to an improved method of distribution of the distribution current (construction of a distributor).

Fig. 9 illustrates in function of time the form of the voltages in the different wires which feed the distributor.

Fig. 10 illustrates the principle of the cabling of the different wires constituting the distributor and allowing, owing to the form of the voltages described with reference to Fig. 9, of varying the sensitivity of the various elements of a line in the course of time.

Fig. 11 is a diagrammatic table, in which is illustrated the addition of the different voltages furnished by the various wires which conduct the current to the distributor. This table explains why the cabling of Fig. 10 traversed by currents according to those of Fig. 9, ensures the scanning of the line.

Fig. 12 shows the application of a principle analagous to those described with reference to Figs. 9, 10 and 11, but in the case where use is made of several electro-optical elements superposed optically and each supplied by a single distribution of current.

Fig. 13 illustrates in function of time a distribution of polyphase current which permits another type of static distributor to be constructed.

Fig. 14 illustrates the diagram of construction of a transformer having a rotating field which permits the polyphase voltage of the static distribution described with reference to Fig. 13 to be obtained.

Fig. 15 illustrates another form of phase-displaced voltage obtained by the use of an induction coil and a rectifier, these voltages being intended, as in the previously mentioned arrangements, to ensure the successive distribution of the conductivity of the various elements.

Fig. 16 illustrates a method of construction of a static scanning device employing distributor voltages according to Fig. 15.

Fig. 17 represents an application of the invention to transmission, in which the entire image of the object to be transmitted is projected onto a photosensitive surface.

All these figures are only given by way of example and in order better to understand the new method of scanning which forms the object of the invention, but it is obvious that this method may be applied in a very large number of other ways, not only for television (transmission or reception) but also for other uses (remote control automatic communication etc.).

Fig. 1 diagrammatically illustrates the application of the exploring system which forms the object of the invention, to a television receiver in which the scanning device receives the modulation at the same time. This device is formed by a very large number of elements 1, 2, 3, 4 etc. forming the screen and on which the image of the subject televised, is produced. By the term "an element," there should be understood, in particular, any body of small dimensions, of which the brightness, transparency, position, index of refraction or the rotatory power in polarised light etc. varies as a function of the electric field or magnetic field, or of the voltage etc. which is applied to it or the current which traverses it. The vision currents received by the station 7 are applied through the line 6 to the different branches (lines 1', 2', 3', 4') terminating at each of the elements. The exploration is ensured by the static scanning of the device 1—4, obtained by successively varying the sensitivity of these elements by means of a distributing member 5. The function of the distributor is to render all the elements of the device except one insensitive to the modulation at each moment, and to displace continuously on the surface the position of the active element. This distributor is synchronised with the transmission through the line 8.

Fig. 2 illustrates a method of scanning, for reception, in which the same references are employed to denote the same elements as in Fig. 1. This diagram only differs from the diagram of Fig. 1 in that the distributor 5 modifies the characteristics 1', 2', 3', 4' associated with the elements 1, 2, 3 and 4 and the scanning of these elements is thus ensured by the successive sensitisation of these lines. All these lines are permanently connected, for example, by the common line 6, to the receiving station 7 for receiving the image signals, but at each moment one line only is rendered sensitive to the image current and then conveys this current towards the element at which this line terminates. The distributor 5 may be operated mechanically, but preferably this distributor will be constructed in a static form. The rectangles 1', 2', 3', 4' diagrammatically represent the variable part of the line, the term "line" denotes either the line strictly speaking, between the element and the station, or any circuit inserted in this line.

Fig. 3 illustrates the application of the scanning system, the principle of which has been described with reference to Fig. 2, to a television receiver comprising three elements 128, 129, 130 forming a multi-elementary screen, on which the image appears. These elements are, for instance, electric discharge tubes (neon) which are illuminated under the action of a magnetic field produced by a solenoid surrounding them, such as 128', 129', 130'. These elements thus translate the electrical image impulses into luminous impulses. The image currents are received by the station diagrammatically illustrated at 134. They modulate a high-frequency generating tube 133. The high-frequency wave so produced is simultaneously and permanently applied to all the electric lines $130^a$—128', 131—129' and 131—130'. Each line comprises a variable condenser (130, 131, 132 respectively). These variable condensers are driven by a common shaft 136 operated by a suitable motor 135 which serves as distributor.

The scanning of the screen, that is. the illumination of the neon tubes and their modulation, in synchronism with the transmitting station is ensured, according to the invention, by this motor 135 playing the part of distributor which simultaneously modifies the tuning of the different lines 128'—$130^a$, 129'—131 and 130'—132. Ar-

rangements are made so that the condensers are displaced with respect to one another, so that at each moment only one of the lines becomes sensitive owing to its tuning to the frequency of the oscillator 133. The other lines, being detuned, do not cause any transmission of modulation to their respective elements. The high-frequency wave thus penetrates into only one of the lines, for instance, the line 128'—130a, at a given moment. This wave produces in the solenoid 128' a high-frequency magnetic field, the intensity of which corresponds to the brightness of the point of the image transmitted at the given moment. The high-frequency magnetic field, in turn, causes the illumination of the tube 128 placed in the interior. Thus, without resorting to any commutation between the receiver and the elements, owing to the periodic sensitisation of the circuits which are connected to the elements, it is possible to transmit the brightness of a definite point of the transmitted object to a geometrically corresponding element of the receiving station.

Fig. 4 shows how the different elements of the surface can be successively sensitised by the use of an electrostatic field, and how it is possible to apply the modulation at the same time, that is, control the luminosity as a function of the vision current received. In this figure, in order to ensure the distribution use has been made of a modification of the dielectric power by resorting to tubes of rarefied and ionised gas serving as dielectric.

It is known that the dielectric constant varies with the intensity of the auxiliary current traversing the tube; this current rendered variable in the course of time acts as a static distributor by automatically sensitising an electric circuit associated with each element of the line.

At 72 there is illustrated the explored line, the elements of which are formed by piezo-electric quartz crystals of different thickness forming a single block of wedge shape but which may also be separated and capable therefore of entering into resonance for different wave-lengths. At 73 there is illustrated a tube capable of being ionised and to which are applied the electrodes such as 74, 75, 76 etc. connected to the different elements of the quartz. The ionisation of the tube is effected in a progressive manner with the aid of a thyration releaser 77 which furnishes voltage of sawtooth form. The modulation currents picked up by a wireless station 79 are applied to a heterodyner 78 which electrostatically excites all the elements of the line 2. However, at a given moment, the transmission can only act on a single element owing to the fact that each element only enters into resonance for a determined value of ionisation of the tube, depending upon the current furnished by the releaser which plays the part of the static distributor.

The quartz entering into resonance plays the part of an electro-optical element (when it is placed behind a polariser) and allows a quantity of light to pass which reproduces the image.

In the above example, a single transmission line is illustrated. Of course, several ionised tubes may also be arranged in succession and it is thus possible to effect the exploration of a very large number of elements.

Instead of employing a dielectric of which the specific inductive power varies for ensuring the effect of sensitisation, the scanning may also be effected by varying the inductance of the circuit, for instance, the permeability of a magnetic core as shown in Fig. 5. In this figure it is also shown how it is possible to maintain the effect produced on the element by the modulation current during the whole of the time which elapses between the two consecutive scannings, for example, by means of a small auxiliary rectifier associated with the element offering a certain time constant.

According to this construction, each element of the surface S, the elements being represented by small rectangles $S_1$, $S_2$, $S_3$, is associated with an oscillatory circuit such as 80, 81, 82. The inductance coil of each of these circuits is mounted on a magnetic core, the permeability of which may be varied by saturating it owing to the passage of a current in an auxiliary winding such as 84, 85, 86 etc. The distribution of auxiliary current forming a distributor varies the tuning of each of these circuits successively and therefore has the effect of "sensitising" the elements at the suitable moment. A releaser allows of successively neutralising the current in each of the coils 84, 85, 86 etc. This releaser comprises the thyratron 87 associated with the condenser 88 and the resistance 89. A potentiometer 90 suitably constructed and connected to the continuous current supply of the releaser allows of distributing the voltages to each of the coils 84, 85 etc. The grid of the thyratron 87 is controlled by the synchronisation current proceeding from the wireless station 91. The modulation is transmitted to a heterodyner 92 which simultaneously excites all the oscillatory circuits, but only a single element is at each moment employed, namely, that which is sensitised. The high-frequency voltage successively appears in each of the auxiliary circuits at the moment when they are sensitised, with an amplitude which corresponds to the modulation. This voltage is rectified by individual copper oxide rectifiers such as 93, and charges the capacity, the plates of which are formed by the two electrodes $S_1$ and $S_1'$ of the electro-optical element. This charge has the effect that the optical modification which the element has undergone, owing to the action of the modulation current, continues during the whole of the time which elapses between two successive scannings. The discharge of this capacity occurs very slowly owing to a certain leakage in the element.

This method allowing of prolonging the effect produced by the modulation on the characteristics of the electro-optical element, by means of a rectifier supplying a circuit offering a certain time constant, applies not only to the circuit connection of Fig. 5 but to all the circuit connections employing a device having multiple elements operated successively by the vision modulation.

Moreover, use may be made of the rectifier adapter to apply the modulating voltage to the elements, in order to ensure at the same time its sensitisation for a definite voltage of the distributor. It is sufficient, for this purpose, to arrange, for instance, the circuit of the element, rectifier included, in such a manner that it becomes conductive only when the voltage of the distributor is applied to it. The modulation voltage will be introduced in series with the former. The same circuit connection may also be applied to the instantaneous subjection to the modulation voltage of the whole of the line comprising several elements which come into operation successively owing to a second distributor.

Fig. 6 illustrates a modification of the application of the invention: the vision currents received by the station 1 are applied to a device 9 transforming them into light of a variable in-

tensity. The scanned multiple device 1, 2, 3, 4 serves here only to transform this light into an image, which is ensured owing to the distributor 5, synchronised by the line 8, which has the effect of successively modifying the optical properties of the elements 1 to 4, that is, modifying either their transparency or their reflecting power. Of course, this arrangement also applies to transmission, in which case 9 will be a photo-electric cell and the device 1—4 will play, for instance, the part of a shutter between the object and the cell.

As is illustrated in Fig. 7, it is possible to ensure, for instance, the transparency of the various elements of a line and thus to effect an entirely static scanning by making use of the electro-optical elements such as those which have been employed in Fig. 1 and by employing a releaser for controlling these various elements.

In this figure there is illustrated at 9*bis* the continuous current supply which feeds the thyratron 10 of the releaser. At 11 there is illustrated its condenser and at 12, 13, 14, 15, 16 are illustrated the fractions of the resistance which determines the period of release. It is known that such a connection (or any other similar releasing device employed in television) allows of obtaining a voltage represented in the course of time by a curve of sawtooth form. The different electro-optical elements are designated by 17, 18, 19, 20, 21 and their juxtaposition constitutes the line to be explored. These elements are connected between the sections 12, 13, 14, 15, 16 of the above-mentioned resistance through the intermediary of the electrodes 17', 18', 19', 20', 21'. The extremities of these sections are brought to progressively increasing and variable potentials, as a function of time, when the releaser operates.

A common electrode 26 is connected to the centre point 22 of a potentiometer 23, 24, which fixes the mean potential of the continuous current supply. If necessary, the condensers 25 are introduced, which prevent any alternating component from appearing at the potentiometer 23, 24; the electro-optical elements 17, 18 etc. possess the remarkable property of becoming transparent only if the voltage between their electrodes is zero; this property is obtained, for example, by producing a very weak transverse field which orientates in a permanent manner crystals polarising the light; use may also be made of any other device sensitive to the electrical impulse and modulating the light. At a given moment, this difference of potential between 26 and any one of the electrodes 17'—21' is zero, while all the other elements present appreciable differences of potential. In order to fix the ideas, let us assume that at the beginning of the release (lower part of the sawtooth curve) the voltage between 17' and 26 is zero; the corresponding elements will then be transparent. On the other hand, the voltage between 18' and 26 will be, for instance, 10 volts, between 19' and 26, 20 volts etc; the corresponding elements will thus be opaque.

Some time afterwards, the element between 17' and 26 will become opaque; on the other hand, the element 18 will become transparent in turn and so on. The releaser thus plays the part of distributor which successively and periodically renders transparent the various elements of the line. In this way, the successive transparency of all the elements is obtained, and this is displaced in a progressive manner from one extremity to the other of the line. This method of scanning may be employed, for instance, for exploring a cinematographic film by projecting this film line for line on to the scanning device having multiple elements, and by collecting the light which this band allows to pass on a photo-electric cell.

Fig. 8 shows that the above principle can very easily be applied to the scanning of an entire surface. In this figure there are shown at 27 and 28 the two thyratrons constituting the line and image releasers, similar to those of which use is being made at present in television receivers having a Braun tube. However, instead of causing the voltage produced by the releaser to act on the deflecting plates of the electronic tube as is customary, the ends of the resistances 29, 30, 31 etc. on one hand and 32, 33, 34 etc. on the other are connected to rectilinear bands, such as 37, 38, 39 etc. extending in one direction and 40, 41, 42 etc. in the perpendicular direction, these bands constituting two plane electrodes facing one another. At a given moment, the different bands of the same electrode are brought to definite potentials defined by the intensity of the current which traverses the resistance. These potentials determine the electrostatic field in the space enclosed between these two electrodes. At each moment, only a single element of this space is found for which the electric field is zero, namely, that which is delimited by the two perpendicular bands which, at the moment under consideration, are at the same potential, whereas the field in all the other elements is not zero. Gradually as the releasers function, the element in which the field is zero is displaced progressively over the surface, and as the two releasers have different frequencies, the element of zero field is displaced along a line and progresses by one line to the following until the surface is scanned. In the space between the two electrodes, an electro-optical substance is placed which possesses the properties already described in the device of Fig. 1.

This system of scanning of a surface may be employed for the reception of television according to the diagram of Fig. 6; the function of the static scanning device is entirely analogous to that which would be performed by a Nipkow disc placed in front of a modulated electric discharge lamp.

The devices described in reference to Figs. 7 and 8 may also be applied to the receiving circuit of Fig. 1.

In this case, the electric distribution which has just been described will play the part of a static distributor which has for effect the successive sensitisation of the elements 1—4, that is, their subjection to the conditions such that they respond to the electrical image impulses which are also applied to these elements. For instance, use may be made of the electro-optical elements formed by a large number of small crystals energised by a Brownian movement. The voltages applied to these elements by the distributor direct the crystals in a definite direction and thus render the elements insensitive to the modulation by the image currents. At a given moment, a single element, as has been described in connection with Figs. 7 and 8, is under the zero voltage of the distributor. Its crystals, therefore, will not be directed and this element will therefore not be blocked. It will translate the electric image impulse into a luminous impulse which will correspond to the brightness of the geometrically corresponding point of the subject televised. In Fig. 7 there is shown in dotted lines the station

7 receiving the electrical image impulses, and by 7*bis* a loop connected to this station and simultaneously submitting all the elements 17 to 21 of the screen to the magnetic field corresponding to the image impulses. Each element is thus submitted to the static voltage of the distributor, applied between its electrodes, for instance, 17' and 26, and to the magnetic modulation field. It is only when this static voltage passes through zero that the element becomes sensitive to the magnetic field and reproduces a point of the image.

The arrangement of the above-described distributor presents the disadvantage of not being very precise; the total voltage of the releaser being limited, only a very small fraction of this voltage is provided between each consecutive element, in order to pass from the transparency to their opacity, if the number of elements is increased. The precision of the system may be much improved and the necessary voltages may be reduced by employing the following means:

Instead of applying to the different elements of the line (or of the surface) to be scanned, voltages which at a given moment are distributed in an order increasing in a regular manner, the voltage of the "distributor" is obtained by means of several distribution wires independent of one another, and there are applied to these different wires voltages variable in the course of time, which allows, as will be shown by the following example, of reducing the voltage on the element. By suitably choosing the voltages of the elementary wires, it is possible to achieve the result of applying to only one of the elements a total voltage of zero, and it also is possible to modify the different voltages of the wires in such a manner that this result is produced successively in the course of time for each of the elements.

Figs. 9, 10 and 11 explain this improved method of distribution of the distribution current. In the example illustrated in Fig. 10, it has been assumed that the number of elements (51*a*, 51*b*, 51*c* etc.) of the line to be explored is 15. Use has been made of a distributor comprising four independent pairs of distribution wires. These pairs are designated by 47 and 47*bis*, 48 and 48*bis*, 49 and 49*bis*, 50 and 50*bis*.

Fig. 9 illustrates as a function of time the form of the voltages applied to each of the wires which feed the distributor. In this figure, the abscissa $T_1$—$T_2$ represents the time which elapses between the two consecutive scannings of any one of the elements of the surface. The voltage applied to the first wire 47 which feeds the coil 47' is represented by the curve 43. The inverse of the voltage 43 which feeds the wire 47*bis* and its coil is represented by the curve 43*bis*. The voltage applied to the second wire which feeds its coil 48' is represented by 44, and its inverse which feeds the wire 48*bis* by the curve 44*bis*. By 45 there is represented the voltage furnished to the third wire 49 which feeds the coil 49' and by 45*bis* its inverse which feeds the wire and the coil 49*bis* etc. All these coils magnetise the cores 52, 53, 54 etc. of transformers on which are selected the different individual distributions which constitute the distributor. The successive elements of the line explored such as 51*a*, 51*b*, 51*c* are brought to a potential with respect to earth by means of a distributing cabling which is shown in Fig. 10 and which is fed by the above-described cores. The elements of even rows, such as 51*a*, 51*c* etc., are fed by the core 52, while the elements of odd rows such as 51*b*, 51*d* etc. are fed by the core 53. By other means, the secondary windings such as 55 and 56 which feed the first two elements 51*a* and 51*b* are connected to one another, and the potential of their junction point is modified by the action of the core 54 and so on. The voltage of each of the elements of the line such as 51*a*, 51*b*, 51*c* etc. results from the addition of the voltages furnished individually by the different wires 47, 47*bis*, 48 and 48*bis*. As is shown in Fig. 9, the frequencies of currents which feed the different wires are sub-multiples of one another. It will be shown that at each moment, only one of the elements of the line explored possesses a zero voltage and that the voltage applied to all the other elements is different from zero. For this purpose, there have been illustrated in the table of Fig. 11 the first three successive distributions of the voltages during scanning (that is, during the exploration of the first three elements of the line). The voltage of each secondary winding 55, 56 etc. has successively a zero or a unitary value (Fig. 9), which is represented in the table by 1 or by 0 and the voltage applied to each element has been totalled. In the last line of each table, the location corresponding to the active element at the moment under consideration, that is, that which is transparent while all the others are opaque, has been framed. It is clear from this table that a continuous scanning is obtained if frequencies which are sub-multiples of one another are applied to the different wires. In the above-mentioned examples, the successive variation of the transparency of the device scanned is obtained. This result may find television applications in installations of the type described in Fig. 6. The action on the elements may have as result also the variation of their power of reflection or any other optical modification and may be employed for receiving an image transmitted to a distance.

Moreover, these circuits may be employed for providing the television installation described in Fig. 1. It is sufficient for this purpose to transmit the modulation simultaneously to all the elements. This transmission may be effected by the distributing member itself.

The distributing circuit connection of Fig. 10 may be simplified by combining the cores 52 and 53 into a single core and by winding the secondaries 55 and 56 in opposite directions.

In the example chosen a particularly simple case has been described where a line is explored and use has been made of a linear division system, but it is evident that the same principle can be applied to the scanning of a surface. Instead of the binary division system it is evident that any geometrical progression whatsoever may be employed.

This geometrical distribution may be effected by circuits other than that forming the object of Fig. 10, provided that they fulfill the following conditions; the elements of the line or surface scanned are distributed in groups, each of them into sub-groups and so on, and the whole of the elements of each group, then of each sub-group, is fed by an individual distribution of current, these different distributions of current having frequencies which are sub-multiples of one another.

Instead of employing a single row of electro-optical elements, to which the sum of several elementary voltages is applied, several optical elements may, on the contrary, be placed one behind the other, and a single voltage may be applied to each of them. Thus the equivalent

of a mechanical shutter is statically obtained, the vanes of which would be of different dimensions and which would be movable with different speeds.

Fig. 12 illustrates this modification. At **58, 59, 60** and **61** are shown the four lines of optical element arranged one behind the other and traversed at the same time by the luminous beam **62**. The lines **63, 64, 65, 66** feed electrodes in the form of grids, which act on the elements.

The dimensions of these electrodes vary from one line to the other according to a geometric progression; in particular, the length of the electrode of the line **79** is half of that of the line **58**. The distributor wires are associated, for instance, with oscillatory circuits such as **67, 68, 69, 70** receiving their energy originally from a common multi-vibrator **71**. This multi-vibrator furnishes lines **63—66** with voltages similar to those of Fig. 9.

Instead of employing a releaser comprising a thyratron for obtaining the voltage of the static distributor (that is, for ensuring the blocking and the successive sensitisation of the elements), it may again be obtained originally from, for example, a polyphase transformer.

In Fig. 13 there is illustrated the form of the voltages furnished by such a distributor as a function of time and in Fig. 14 a cabling of the phase-multiplying transformer furnishing these voltages. On the image-modulating voltage there is superposed a negative polarising voltage which is capable of modifying the sensitivity. At **94, 95, 96** there is shown a certain number of alternating voltages displaced with respect to one another, which are furnished by a phase-multiplying transformer, and serving to sensitise the different elements of a line. On these alternating voltages there is superposed a continuous voltage **97**, which allows of successively sensitising each element in a very short interval of time, such as that shown in hatching at **98, 99, 100** etc. Each element is associated with a rectifier and its sensitisation takes place as soon as the polarisation voltage exceeds a certain value, starting from which the rectification may be effected.

Fig. 14 shows, in a receiver, a cabling system which allows of obtaining different voltages in a very simple manner and if necessary in a sealed tube. Through the glass wall V of this bulb there pass, for example, four conductors **101, 102, 103, 104** fed by two triodes $T_1$ and $T_2$ furnishing a distribution of polyphase currents. These conductors feed two coils **105** and **106** perpendicular to one another and arranged on a core N. This core carries a continuous winding similar to the armature of a Gramme ring, which winding furnishes the different polarisation voltages necessary for feeding the wires of the distributor **107, 108, 109** etc. terminating at the elements arranged between the electrodes $S_1$, $S_2$, $S_3$ and a common electrode E. In the lead of each element there is inserted a rectifier $R_1$, $R_2$, $R_3$. The winding is so arranged so as to comprise an accessible neutral point P (such as is the case in the Dolive-Dobrovolosky generators). This neutral point is connected by a wire F to the terminal **102** which serves at the same time as return lead for the coils **105** and **106**. The modulation (that is, the image current) is introduced by the coil M between the wires **101** and **102**. The wire **101** is connected to the electrode E common to all the elements. Moreover, a polarising battery B is inserted in the wire **101**. This battery polarises the circuit of each rectifier ($R_1$, $R_2$, $R_3$) so as to prevent any current from passing (voltage **97** of Fig. 13), and the image currents received in M therefore cannot act on the electro-optical elements. The voltages of the Gramme ring (**94, 95, 96**, Fig. 13) are superposed on the blocking voltage **97** and neutralise it periodically (point **98, 99, 100**). At these moments, the rectifier allows the modulating current to pass, which acts on the element.

The arrangement described with reference to Figs. 13 and 14 presents the drawback that the moment of sensitisation of each element is not sufficiently precisely defined, as the continuous sinusoids of voltage (**98** for example) which sensitise the elements are tangent to the straight line **97**. A better precision can be obtained in the definition of the moment of the sensitisation, by producing a voltage of very short duration at the moment when the sinusoid cuts the X-axis.

Fig. 15 illustrates, as a function of time, the instantaneous voltage applied to the different elements in this way and Fig. 16 represents the corresponding cabling of the elements. Moreover, Fig. 16 differs from Fig. 14 in that the different voltages, displaced in phase with respect to one another are obtained, not by means of a Gramme ring, but by means of a simple potentiometric arrangement. The over-voltage obtained is utilised by a rectifier which discharges in series to an inductance coil. As Fig. 15 shows, voltages **110, 111, 112** of very short duration are obtained and displaced with respect to one another with the aid, for example, of an individual copper oxide device and an inductance in series on each element. In Fig. 16 there are illustrated at **116, 117, 118, 119** the current tappings of a circular potentiometer serving to distribute the voltage between the different elements. At **120, 121, 122** etc. there are illustrated the current tappings selected on this potentiometer, which each feed a rectifier (for example, **123**) through an inductance coil (for example, **124**).

The instantaneous over-voltage (which is produced successively at each of the rectifiers, as is shown in Fig. 15) is employed to effect the distribution of the voltages between the bands **125** through the condensers (for example, $C_1$). A second similar distributor **126** ensures the distribution between the bands **127** perpendicular to the former bands. As has been described in connection with the circuits of the preceding figures, this installation allows of successively sensitising the elements included between these two planes of bands.

Fig. 17 illustrates the application of the invention to transmission. The lens **138** forms on the cathode of a photo-electric cell an image of the subject televised. Opposite this cathode there is arranged a large number of elementary anodes **139, 140, 141, 142, 143** which are permanently connected to the transmitting station **152**. According to the invention, the electronic image forming on the cathode is scanned, without employing a moving electronic beam, but by successively sensitising all the points of the cathodic surface. To this end, each of the elementary anodes is connected to a circuit comprising a polarising battery **144** serving for "blocking" this anode, and the coil such as **145, 146, 147, 148, 149** into which may be introduced an auxiliary voltage which neutralises the effect of the battery **144** at the moment when the element must be sensitised.

This sensitising voltage is obtained originally

from the distributor **150** and by means of the coils **154, 155, 156, 157, 158.**

It is thus possible to obtain a photo-electric current which at each moment corresponds to the electronic transmission of the element of the surface of the cathode situated opposite the anode, and as the distributor successively sensitises the various elements, the current collected at the terminals of the resistance **151** in the output circuit corresponds successively to the tint of the various points of the image explored by the distributor. This modulation is introduced into the wireless apparatus **152**, which may also transmit the synchronising signal furnished by the distributor **150** and suitably conducted through the transmission line **153.**

Instead of causing the modulation to act on a system of wires which is independent of distribution (Figs. 1 and 2) or on a lamp placed behind the distributor (Fig. 6), the distributor itself may also be employed for directing the modulation. This result may be obtained, for instance, by employing electro-optical elements, the sensitivity of which is not linear and in which the modulating voltage cannot influence the operation of the distributor.

It is possible to reduce the voltage applied to the electro-optical elements and serving either to sensitise them or to block them, by making use of bodies which do not follow Ohm's law in combination with the electro-optical elements. The use thereof is particularly interesting in the case of the circuit arrangement of Fig. 7, as it permits of considerably reducing the continuous exciting voltage applied to the electro-optical elements (voltage between **17'** and **26** or **18'** and **26** etc.) An increased resistance is introduced into each of the wires **17'—18'** etc. which will be arranged in series with the body in question, placed in parallel with the electro-optical element. This body must be chosen in such a manner that the voltage drop at its terminals does not substantially exceed a limiting value which must be equal to or greater than the blocking voltage of the element. Thus the greatest part of the voltage is absorbed by the resistance and the voltage applied to the electro-optical element included between zero and this limiting value may be chosen sufficiently low. As the body in question, use may be made, for example, of an electrolytic solution; this may be the electro-optical element itself.

In order to ensure the sensitisation and the blocking of the different elements or their circuits, use may be made of the following means. Each element, by being sensitised, causes the desensitisation of the element which immediately precedes it and initiates the sensitisation of the element which immediately follows it. Thus, the elements are sensitised in sequence and the complicated circuit arrangements described above (such as releasers, distributors with numerous elements) are avoided.

PIERRE MARIE GABRIEL TOULON.

PUBLISHED
MAY 18, 1943.
BY A. P. C.

P. M. G. TOULON
PICTURE TRANSMISSION SYSTEMS
Filed Oct. 28, 1936

Serial No.
108,062
6 Sheets-Sheet 1

Fig. 1

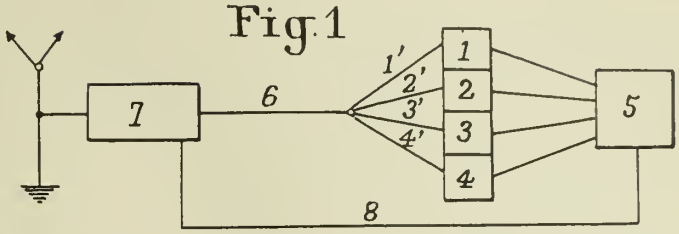


Fig. 2

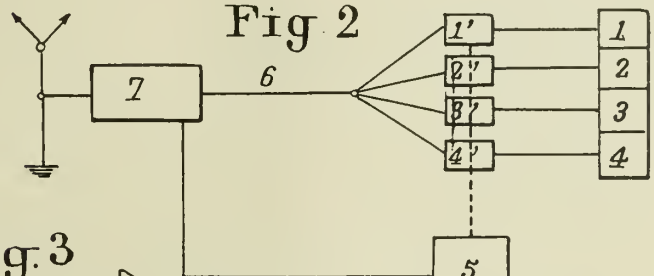


Fig. 3

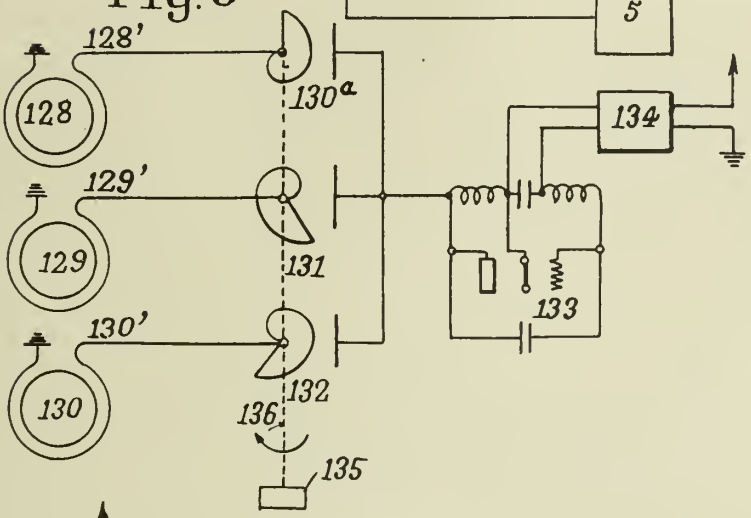


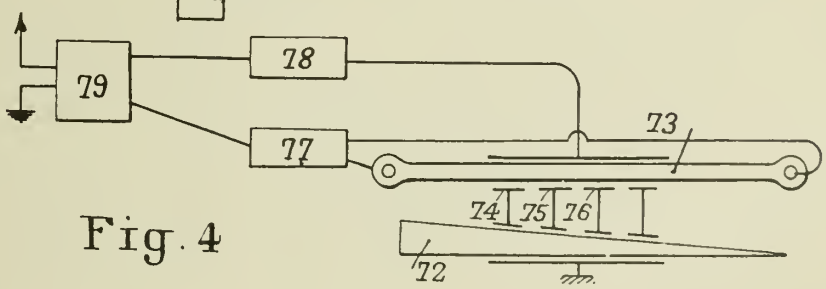


Fig. 4

INVENTOR,
P. M. G. TOULON.
BY Ben Kilburn
ATTYS.

PUBLISHED
MAY 18, 1943.
BY A. P. C.

P. M. G. TOULON

PICTURE TRANSMISSION SYSTEMS

Filed Oct. 28, 1936

Serial No.
108,062

6 Sheets-Sheet 2

Fig. 5

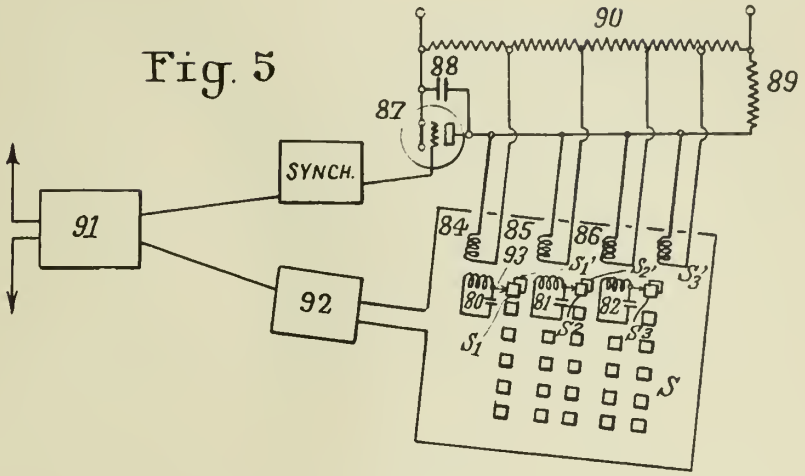


Fig. 6

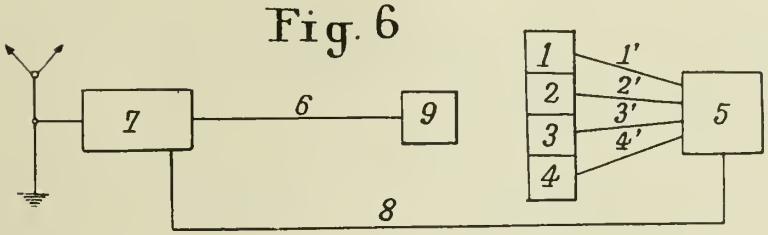


Fig. 7

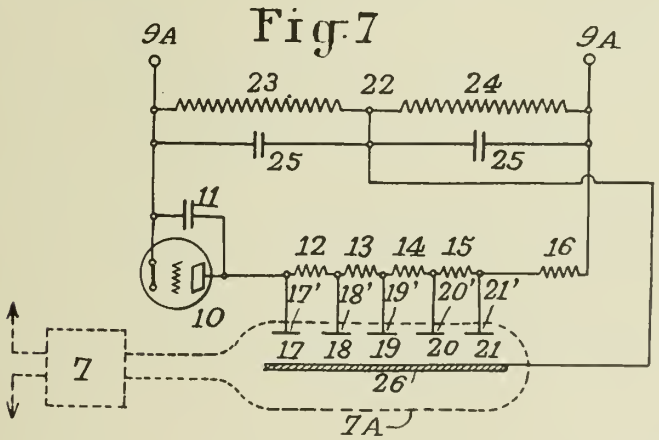


INVENTOR,
P. M. G. TOULON.
By Blair Hilsgrove
ATTYS.

PUBLISHED
MAY 18, 1943.
BY A. P. C.

P. M. G. TOULON

PICTURE TRANSMISSION SYSTEMS

Filed Oct. 28, 1936

Serial No.
108,062

6 Sheets-Sheet 3

Fig. 8

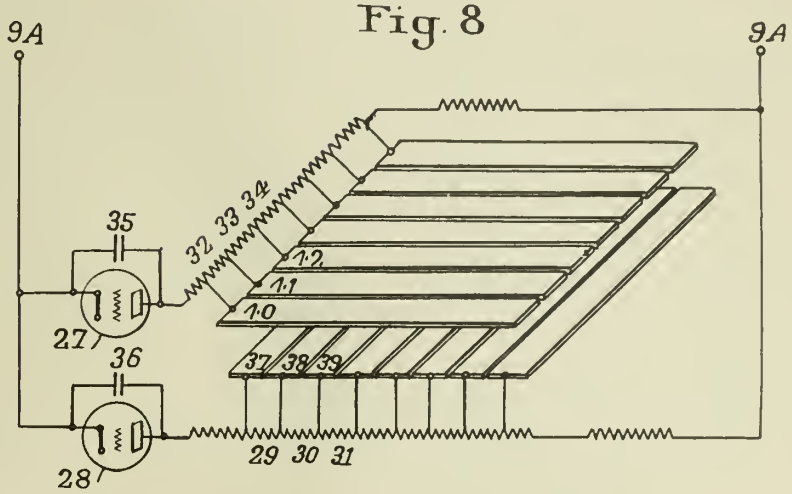


Fig. 9

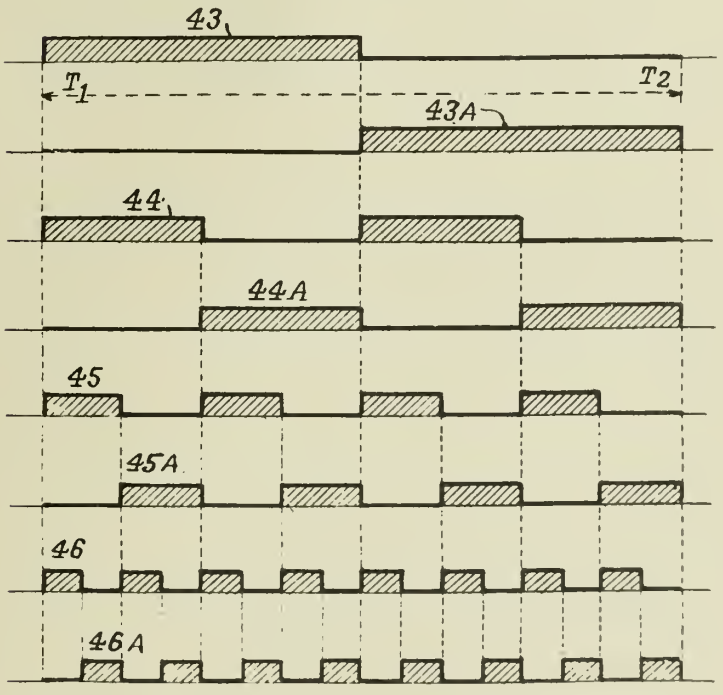


INVENTOR
P.M.G. TOULON.
BY Blair & Kalegna.
ATTYS

PUBLISHED
MAY 18, 1943.
BY A. P. C.

P. M. G. TOULON
PICTURE TRANSMISSION SYSTEMS
Filed Oct. 28, 1936

Serial No.
108,062
6 Sheets-Sheet 4

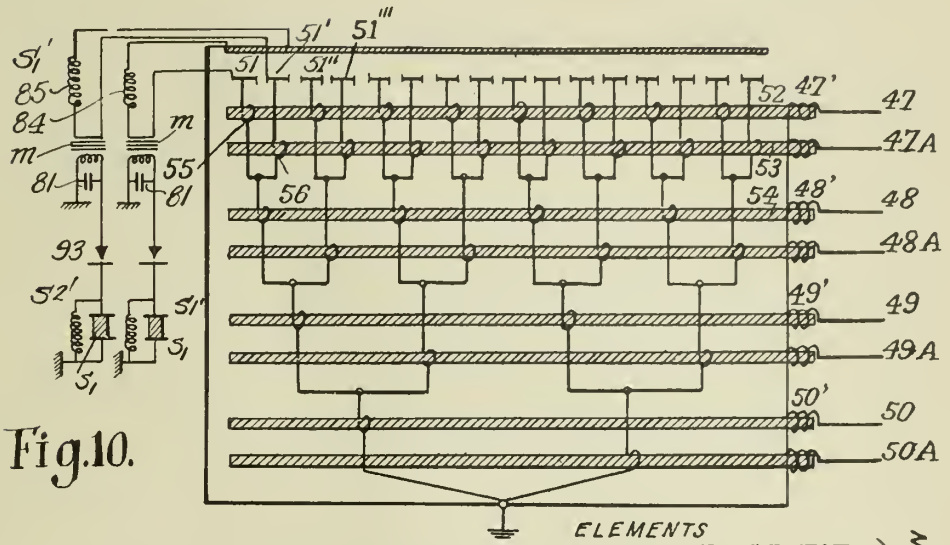


Fig.10.

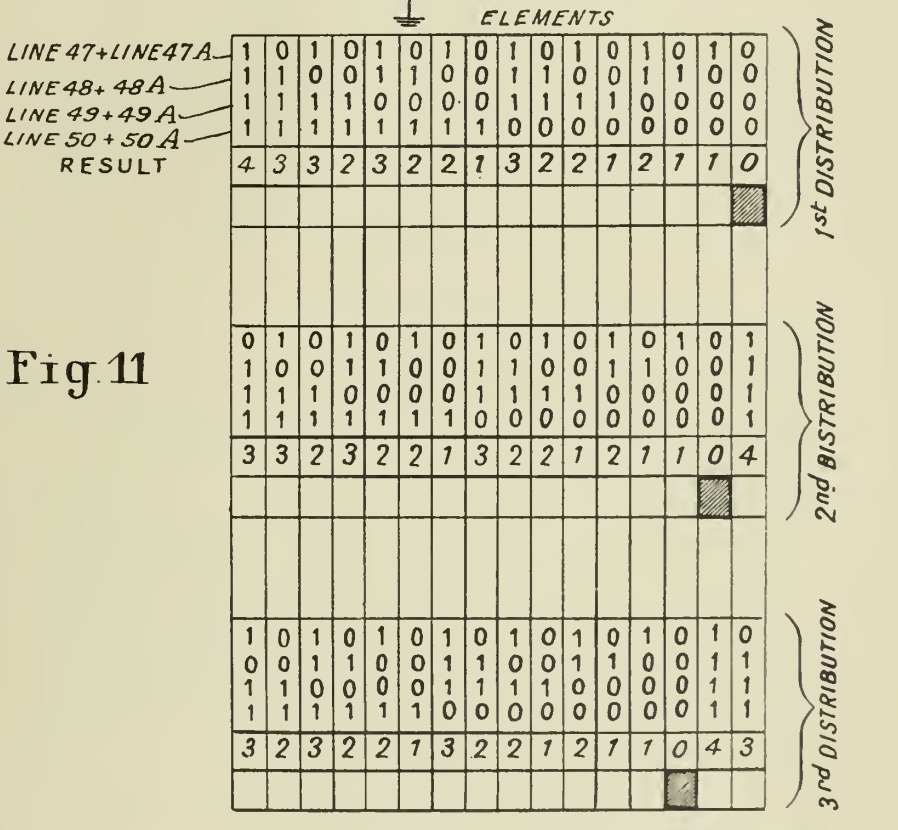


Fig. 11

INVENTOR
P.M.G. TOULON.
By Cahill & Kilcoyne
ATTYS.

PUBLISHED
MAY 18, 1943.
BY A. P. C.

P. M. G. TOULON
PICTURE TRANSMISSION SYSTEMS
Filed Oct. 28, 1936

Serial No.
108,062
6 Sheets-Sheet 5

Fig. 12

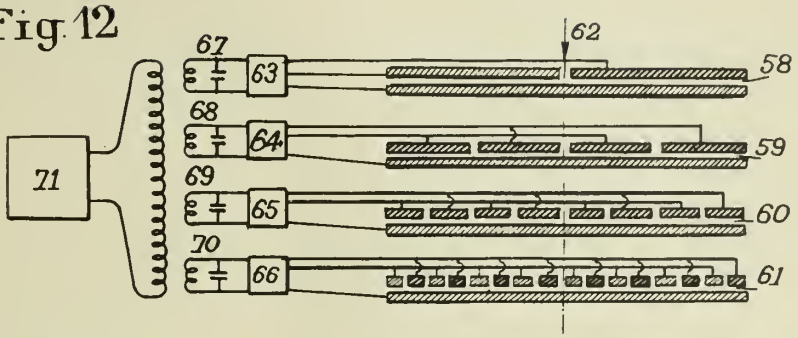


Fig. 13

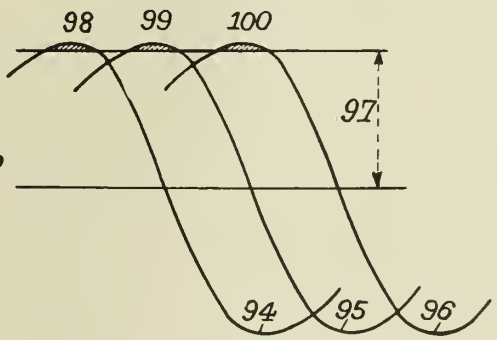


Fig. 14

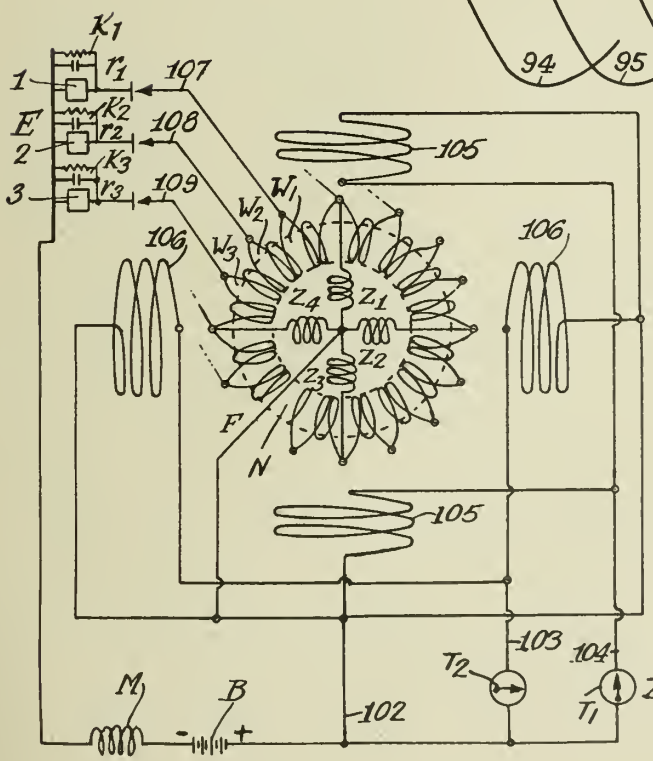


INVENTOR,
P. M. G. TOULON.
By Blair & Lilesque
ATTYS.

PUBLISHED
MAY 18, 1943.
BY A. P. C.

P. M. G. TOULON

PICTURE TRANSMISSION SYSTEMS

Filed Oct. 28, 1936

Serial No.
108,062

6 Sheets-Sheet 6

Fig. 15.

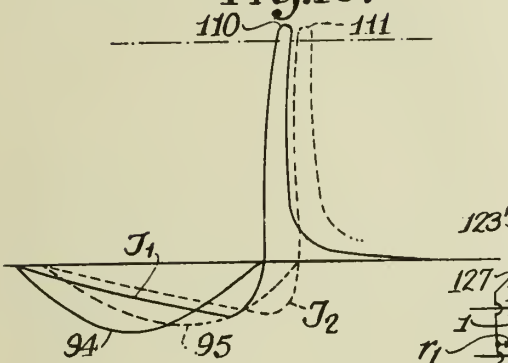


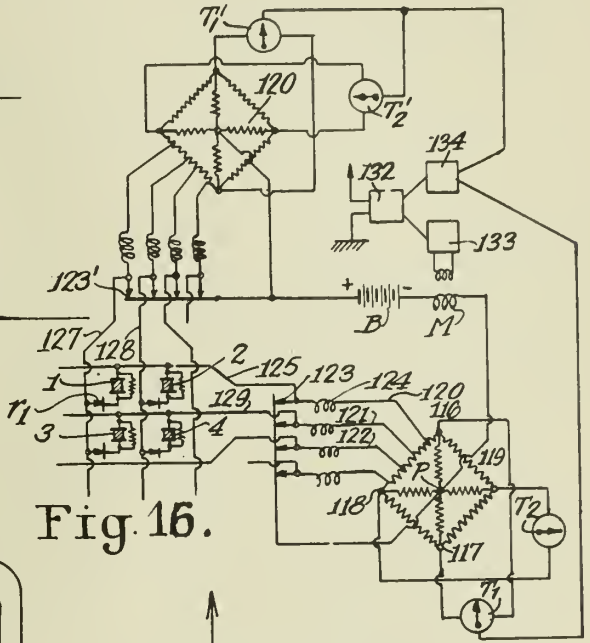


Fig. 16.

Fig. 17.

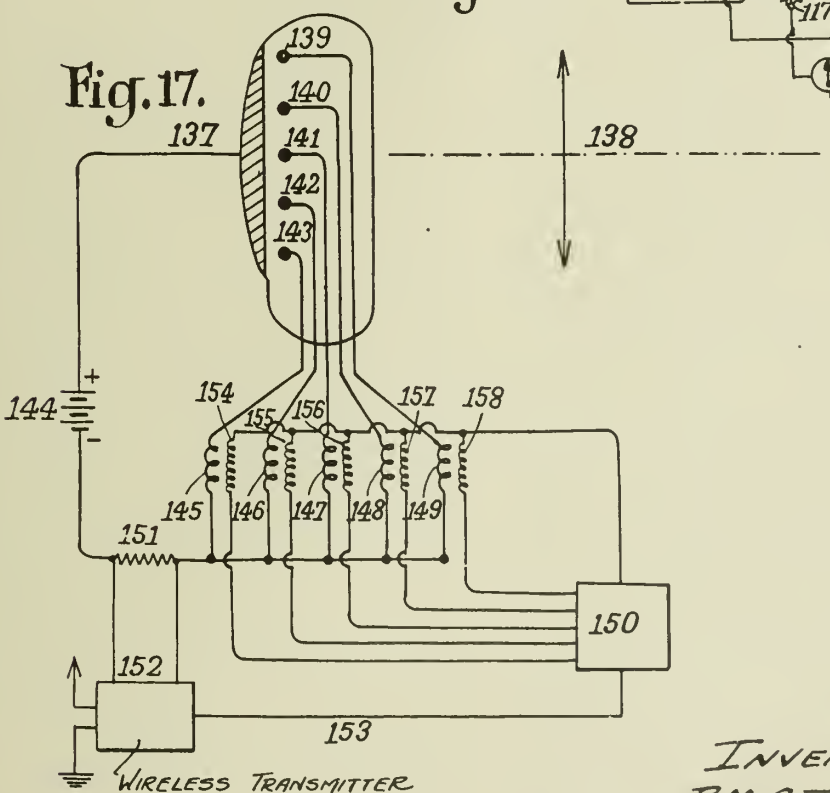


INVENTOR.
P. M. G. TOULON.
By Blair & Kilburn
ATTYS.

Published May 18, 1943 Serial No. 109,507

# ALIEN PROPERTY CUSTODIAN

## SYNCHRONISING APPARATUS FOR CATHODE RAY OSCILLOGRAPHS

René Barthelemy, Fontenay Aux Roses, France; vested in the Alien Property Custodian

Application filed November 6, 1936

It is known, for the production of "saw-tooth" potential differences to control the movement of the luminous spot in cathode ray oscillographs, to use relaxation circuits including gas discharge tubes known as "thyratrons". One of these systems employed for television in which there are two scannings movements at right angles to one another known as "line" movement and "image" movement, consists more particularly in giving to the corresponding thyratron circuits appropriate time constants to trigger the oscillations of the line circuit by means of impulses synchronised with the transmission of the signals to be reproduced, and to trigger the oscillations of the image circuit by the passage of a current in the line circuit. In these known systems the synchronising impulse is received on the grid of the line thyratron which it depolarises in such a manner as to render the thyratron conductive.

The object of the present invention is to provide an improvement of the above-mentioned systems, which improvement is characterised by the use of the synchronising impulses. In effect in order the more readily to differentiate, in the modulated current, the synchronising impulses from the variations of current due to the analysis of the image, it has been proved to apply the synchronising impulses to the current modulated by the image in such a manner that the variations of current due to the synchronising impulses are of the same sense as the variations of current due to the dark parts of the image. As will be explained hereinafter this method enables the synchronising apparatus at the receiver to be controlled by the whole of the modulated voltage received without the necessity of separating out the synchronising signals by means of filters or other appropriate apparatus.

Figures 1, 2, and 3 of the accompanying drawing represent the curves of the modulated current as a function of time.

Figure 4 is a circuit diagram of a synchronising apparatus at the receiver.

Fig. 1 shows the normal curve of the current modulated by the analysis of the image. The parts **1**, **2** and **3** correspond to the light parts of a line and the parts **1'**, **2'** . . . correspond to the light parts of the following line. On the other hand, the parts **4**, **5**, **6**, **4'** . . . correspond to the dark parts. The mean current $i_0$ is such that, for an interval equal to the analysis of an image, the total surfaces of the curve corresponding to the light parts is equal to the surfaces of the curve corresponding to the dark parts. It will be appreciated that the maximum amplitude of the dark parts, compared with the mean current $i_0$, is small compared with the maximum amplitude of the light parts. It is on the appreciation of this fact that the present invention is based. It is actually current practice to insert the synchronising impulses in the current modulated by the image in such a manner that the impulses produce current variations of the same sense as the light regions of the image. It may thus happen that the maximum amplitude of the light regions in close to the amplitude of the synchronising signals. Filters are then necessary, at the receiver, to separate the signals out of the whole of the modulated current received.

According to the present invention, on the contrary, the amplitude of the synchronising signals is of the same sense as the dark parts of the analysis, as is shown in Fig. 2, in which **7** represents a synchronising signal transmitted between two successive lines. It will thus be seen that this signal is clearly distinguished from the obscure parts **4**, **5**, **6**. It is then possible to operate the synchronising apparatus at the receiver directly by the received modulated current without the interposition of a filter. It is, in effect, sufficient to polarise this apparatus in such a manner that the obscure parts do not cause the same to function whilts the synchronising signals bring it into action.

As shown in Figure 2 the synchronising signals correspond to a reduction of the intensity of the modulated current which may even annul it. When the synchronising device at the receiver consists of gas discharge tubes, considerable difficulties are encountered in obtaining the precise triggering of these tubes by means of the annulement of the modulated current. Therefore, the present invention provides also that the modulation, at the transmitter, shall be such that the light parts **1**, **2**, **3** of the image correspond to the reduction of the intensity of the modulated current (Fig. 3) whilst the dark parts **4**, **5**, **6** and the synchronising signals **7** correspond to an increase of the said current.

The principal advantages of this process are: the increase of security of reception of the synchronising impulses; the easy separation of the synchronising signals from the remainder of the modulation; the provision of a very precise triggering of the gas discharge tube at the receiver; protections against interference due to the fact that if the intensity of the synchronising signals is twice that of the mean intensity the energy corresponding to the same is four times that of the mean energy.

Figure 4 shows a circuit diagram of a convenient synchronising device more particularly for the reception of the molated current of the form shown in Figure 3. This device comprises essentially two gas discharge tubes $Th_1$ and $Th_2$ effecting, respectively, the "line" movement and the "image" movement of a cathode beam. The received modulated voltage is applied to the terminals E and $E_2$ and is transmitted to the terminals of a resistance $R_2$ through the intermediary of a resistance $R_1$ and a condenser $C_1$. One of the terminals of the resistance $R_2$ is connected to the earth line of the receiver and the other terminal is connected to the cathode $K_1$ of the tube $Th_1$. Moreover, $R_2$ forms a potentiometer permitting the application, between the grid $G_1$ and the cathode $K_1$, of the whole or a part of the modulated voltage received. This application is made in such a sense that the synchronising signals, which correspond to an increase of the modulated potential received, bring about a reduction of the potential of the second cathode $K_1$ in order to render the tube $Th_1$ conductive. When only a part of the moduled potential is applied across the grid and the cathode the potential of the cathode will be reduced more than the potential of the grid or, in other words, the potential of the cathode with respect to the grid will be reduced and the tube will become conductive. The contact on the resistance $R_2$ feeding the grid $G_1$ enables the point of triggering of the tube $Th_1$ to be adjusted.

The line oscillating circuit comprises the condenser $C_2$ and the charging resistance $R_3$. An electrostatic coupling provided by the condenser $C_3$ which is very small compared to the condenser $C_2$ allows for the feeding, in turn, of the cathode $K_2$ of the image gas discharge tube $Th_2$ associated with which is the condenser $C_4$ and resistance $R_4$ forming the image oscillating circuit. The capacities $C_5$ and $C_6$ serve to connect the oscillating circuits to the deflector plates of the cathode tube.

The heating circuits of the two gas discharge tubes are well insulated from one another and have as small a capacity as possible.

It will be obvious that, without departing from the scope of the present invention, many modifications may be made in the construction and coupling of the oscillating circuits, the feed to the cathode without separation of the modulated signals being one of the characteristic features of the present invention.

RENÉ BARTHELEMY.

PUBLISHED
MAY 18, 1943.
BY A. P. C.

R. BARTHELEMY
SYNCHRONISING APPARATUS FOR CATHODE RAY OSCILLOGRAPHS
Filed Nov. 6, 1936

Serial No.
109,507

Fig. 1

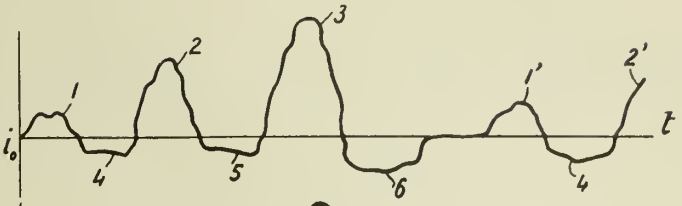


Fig. 2

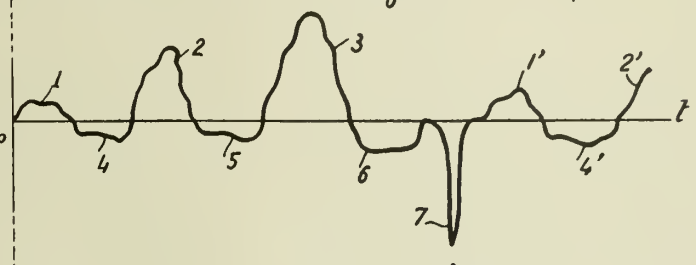


Fig. 3

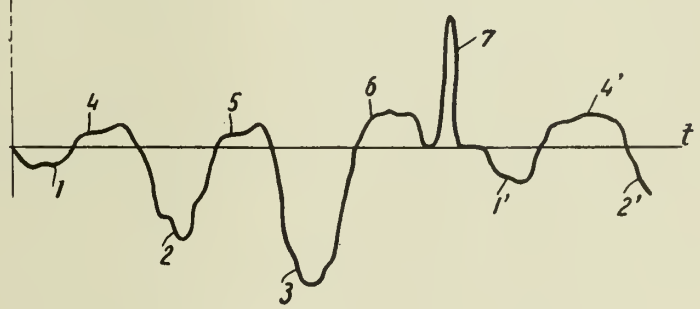


Fig. 4

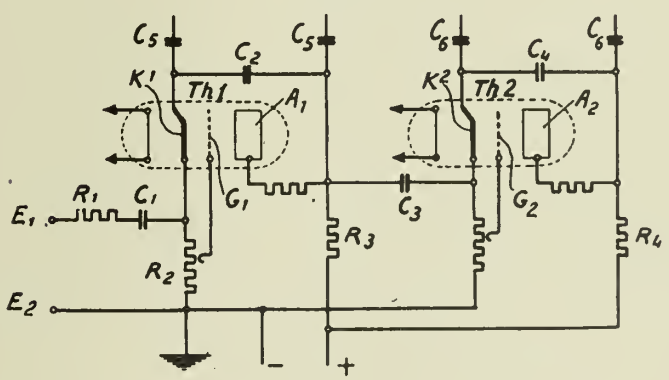


René Barthelemy
INVENTOR
By Otis Mund
his ATTY.

Published May 18, 1943 Serial No. 139,213

# ALIEN PROPERTY CUSTODIAN

## PRODUCTION OF ROLLERS

Loránd de Tavy, Budapest, Hungary; vested in the Alien Property Custodian

Application filed April 27, 1937

This invention relates to the production of such rollers of embossed surface, the embossments of which consist of one or more design elements, for example in intaglio or relief, these being registered on the surface of the roller at least in the direction of the circumference of the roller, but usually also in the direction of the axis of the roller, in such a way that they cover the surface of the roller without any gap or overlapping occurring between, respectively of, their ends or sides.

Such registration of the design element or elements on the surface of the roller is usual in the art and necessary in such cases, when the roller is to be used for transferring the design element or elements, for example by printing, on indefinite lengths of material, for example textile fabric, in such a way, that the design element or elements should be repeated on the material in faultlessly regular and registered, uninterrupted succession indefinitely. Such registration of the design elements is also necessary, when using the roller for transferring the design element on plastic sheet material, such as rubber, by rolling said material between rollers, at least one of which has the said embossed surface. It is further necessary when the roller, for example the well-known hand-engraved steel roller used in the art of preparing printing rollers for printing on textile fabric, is used for transferring its relief design element to the surface of another roller of greater diameter, such as a printing roller consisting of copper, by means of pressing the hard steel roller to the surface of the copper roller and revolving both together with their surfaces in mesh with each other, until the whole circumference of the copper roller has been impressed with the design element or elements of the steel roller, in correct registration.

The term "design element" used in this specification and in the claims signifies no pictures in the ordinary sense of the word, such as halftone pictures, but only all kind of mainly "black-and-white" material, such as drawings, ornamental patterns, designs and the like, for instance such as are used in intaglio printing on textile fabrics, especially artificial silk, and on wall papers, i. e. materials of great paint-absorbing quality, and in which design elements also portions of text or other portions may appear in some cases.

Many kinds of methods have been proposed up to now for the production of the above-mentioned rollers of embossed surface, some of which are mentioned and described in the specification of the Patent No. 1,878,347, and in all these methods, the most serious difficulty was caused by the necessity of the exact registration of the design element or elements on the surface of the roller.

The main object of the present invention is to provide a process, by means of which the above-mentioned drawback consisting in the difficulties of the circumferential registration of the design element or elements on the surface of the roller is removed. This object is, according to the invention, achieved by transferring the design element or elements from the design carrier, for example drawing or film, carrying on its surface one or more design elements, and being preferably shaped as an endless band continuously covered by the design element, by means of scanning said design carrier with a ray of light, and of recording, effected on the external surface of the roller to be covered with the design elements in registration, by any suitable method, i. e. by transmitting the design element from its carrier onto the roller according to the principles of picture telegraphy, and thereby simultaneously registering it on said roller.

Another object of the present invention is to provide a process by means of which also the drawback of the difficulty of the axial registration of the design-elements is removed without necessitating for this purpose the use of such a design carrier, for example film, the axial length of which is substantially equal to that of the roller to be produced. This is according to the invention accomplished by controlling with the photo-electrical tension or current of a single scanning device a plurality of recording devices acting on the same roller, said recording devices being preferably positioned in respect to each other in such a way, that they should record along the same generatrix of the cylindrical roller, but on various points of said generatrix, the axial distances between said points being equal with each other and/or with the axial length of the design element to be transmitted.

A further object of the present invention is to provide a process by means of which the design elements can be transferred to the surface of the roller with the desired sharpness and yet with the necessary speed of operation, and by means of which undesirable parts of the image to be transmitted can be suppressed or omitted from being transferred to the roller, this being, according to the invention, accomplished by controlling the recording device or devices with the scanning device in a special electrical connection,

more fully explained hereinafter and shortly termed as a "toppling circuit".

Another object of the present invention is to provide a process by means of which, in the production of such rollers, on the surface of which the design element repeats itself several times in succession also in the direction of the circumference of the roller, a design carrier can be used, which bears only a smaller number of design elements or preferably even only a single design element, this being, according to the invention, accomplished by using an apparatus of the well-known drum type, on which, however, the diameter of the scanning drum substantially differs from the diameter of the recording drum, i. e. of the roller to be produced, and driving, during the transmission, these drums with substantially equal circumferential, but different angular speeds, one of which speeds preferably being a whole-numbered multiple of the other.

A further object of the invention is to provide a process by means of which several or all the separate individual rollers of the set of rollers necessary for printing a multi-coloured design on textile or other material can be produced by transferring the separately-coloured parts of the design element to the individual separate rollers from a single, identical, multi-coloured design carrier. This is, according to the invention, accomplished by "selective scanning" of the design carrier, as more fully explained hereinafter.

Other objects of the invention, the manner in which the same are attained, and the apparatus with which the process according to the invention may be preferably carried out in practice, will appear from the following description, in which, with these and other ends in view, I illustrate, in connection with the accompanying drawings, such examples of adaption as will clearly disclose the broad underlying features of my invention, without limiting myself to the specific fields of practice and details of process and apparatus shown thereon and described herein.

In the drawings

Fig. 1 is a side view of an apparatus for producing printing rollers for printing on textile material.

Fig. 2 is a partial cross-section of the apparatus shown on Fig. 1 in the plane of the line X—X of Fig. 1.

Fig. 3 is a diagram illustrating the axially multiple recording of a design element.

Fig. 4 is a diagram of an electrical circuit adapted for use in the apparatus according to Fig. 1.

Fig. 5 is a diagrammatical partial cross-section through one of the multiple recording devices of the apparatus according to Fig. 1.

Fig. 6 is a diagrammatical partial section through an alternative recording device.

Fig. 7 is a diagram of an electrical circuit adapted for use with the recording device according to Fig. 6.

Fig. 8 is a diagrammatical cross-section through an alternative, mechanical recording device.

Fig. 9 is a diagram of an electrical circuit, relating to the recording device shown in Fig. 8.

Fig. 10 is a diagrammatical side view of an alternative apparatus similar to that shown on Fig. 1, but illustrated with the scanning and recording devices taken off.

Fig. 11 is an enlarged partial cross-section in the plane of the line Y—Y of Fig. 10.

Fig. 12 is a cross-section in the plane of the line Y—Y of Fig. 10.

Fig. 13 is a side view of a scanning drum.

In utilizing my system in practice I may employ whatever alternatives or equivalents of process, structure and circuits that the exigencies of varying conditions may demand, for example the more complicated circuits known in the art of picture telegraphy, photoradio or photoelectric printing-plate engraving, without departing from the spirit of the invention, which consists, shortly, of effecting the transferring and registering of the design elements electrically, in a continuous single operation.

It has been proposed heretofore to scan and to record by mechanical engraving on the surface of rollers, as instanced in Patent No. 2,029,103 issued January 28, 1936, to Walter Howey. The proposed engraving, however, is not suitable for producing the large copper rollers necessary for printing on textile materials, or the small steel rollers used for the production of the aforesaid rollers, and, furthermore, it has not been proposed to transfer design elements to be registered in relation to each other on the surface of the roller, and has not been found that when employing the methods of picture telegraphy, according to this invention, an automatic circumferential registering of the transmitted design elements occurs, such method rendering the occurrence of gaps or overlapping impossible in itself. Therefore when the circumferential length of the design carrier used in my process is not exactly equal with the circumference of the roller, or with its predetermined fraction or multiple, only a slight and scarcely noticeable distortion of the transmitted design element occurs, in my process, instead of the production of a spoiled roller, which inevitably resulted in such case, when using the methods of manufacture proposed for making such rollers up to now. Furthermore, with the scanning apparatus known up to now, it has been impossible to transfer design elements to a roller in a circumferentially registered way, as the scanning drums of this apparatus were always provided with gripping means preventing the whole circumference of the drum to be covered with the carrier carrying the image to be transmitted by them.

On Fig. 1 of the drawing I have shown an apparatus in which six recording devices are controlled by a single scanning device, but in the production of rollers of considerable length I preferably employ twelve recording devices recording on points situated on the same generatrix of the surface of the roller, these points being at equal distances from each other, corresponding to one twelfth part of the axial length of the roller surface to be covered with the design elements. Notably, in this case, the axial length of the design element to be transferred may be equal to the following fractional parts of the length of the roller surface to be covered with the design: $\frac{1}{12}$, $\frac{1}{6}$, $\frac{1}{4}$, $\frac{1}{3}$, $\frac{1}{2}$. As shown on Fig. 1, the apparatus comprises a lathe, which, if it is used for transmitting only, may be of light weight and inexpensive, seeing that it is hardly subjected to any appreciable mechanical stresses. It is, however, advantageous to employ a massive lathe on which it is also possible to remove the old design from the roller by turning, because in that case the removal of the old design by turning, the smoothening of the surface thus obtained, its coating with a light sensitive layer and the transference of the design can be effected with a single fixing of the roller on the lathe, i. e. with a great saving in time and labour, and it is absolutely assured that the roller will, during transference, run accurately in relation to the recording devices.

The lathe is converted into the apparatus according to the invention in the manner shown diagrammatically on Fig. 1, by mounting the chain wheels 3 and 4, having preferably equal diameters and equal tooth pitches, between the main shaft I and the head stock 2 of the lathe, whilst on the body of lathe the arms 6 and 7 holding the mechanism for fixing and rotating the scanning drum 5 made, in this apparatus, of transparent material e. g. of glass or celluloid, are mounted, in the bearings 8 and 9 of which the shaft II carrying the head stock 10 of the scanning drum is supported in such a manner as to be assured against any lateral displacement. On this shaft II there is keyed the chain wheel 3*b* driven from the chain wheel 3 by means of the chain 3*a*, whereas the chain wheel 4*b* driven from the chain wheel 4 by means of the chain 4*a* is mounted loosely on the shaft II and the strong spiral spring 12 is endeavoring to turn this chain wheel 4*b* relatively to the wheel 3*b*. This kind of drive will render the exactly synchronous running of the shafts I and II independent in a high degree of the wear of the chain.

In addition to the above, all that is necessary for converting the lathe into an apparatus according to the invention—by which conversion the said lathe is not rendered unfit for its normal purpose—is only to fix the scanning and recording devices in a removable manner on the carriage 13 and possibly to fix the arm $K_1$ to the tail stock base, because the ratio of transmission between the main shaft and the spindle 14 for moving the carriage is variable in any case on all lathes, and thus the necessary gear ratio depending on the width of lines employed for any transmission can be easily adjusted.

The transferring devices comprise a bar 15 fixed in a removable manner on the carriage, the multiple recording devices 16 and 17 and the scanning device 18, all of which can be displaced on this bar 15 and fixed in their respective positions at any time. The arm 18*a* of the scanning device, projecting into the scanning drum 5, carries the photocell 18*b*. The copper roller A on which the design is to be transmitted is fixed in any desired manner between the headstock 2 and the tailstock 19 and the lathe is driven during the time of transference at a substantially uniform speed, e. g. by means of a small synchronous motor (not shown). The electric conductors 21*a*, 21*b*, 21*c* leading into the scanning and recording devices meet in the cable box 20 mounted on the bar 15, from which box the flexible cable 21 leads to the control box 22 which has been shown on the drawing as being located in the body of the lathe. It is in this box that the various elements of construction of the circuit shown on Fig. 4 (with the exception of the photocell 18*b* and of the magnets 25) are located. When employing highly light-sensitive layers, it is advisable to locate the scanning device in the casing impervious to light indicated by the broken line C.

The manner of operation of the scanning and recording device is shown on Fig. 2. The design carrier B, shaped as an endless band closely fitting on the surface of the scanning drum 5 rotating at a peripheral speed exactly or approximately equal to that of the roller A, but in any case at an angular speed exactly identical with that of the roller A, (the diameter of the scanning drum 5 being exactly or approximately equal with that of the roller A) is scanned by the light rays of the motor car lamp 24 or of some other source of light supplying light of any desired suitable wave-length and intensity, concentrated on the said design carrier by means of the lens or lens system 25*a*, by which rays the photocell 18*b* is illuminated in due course, the motor car lamp or other source of light referred to being capable of being adjusted into focus by means of the screw spindle 23. The photo currents are, in the connection according to Fig. 4, actuating the light shutter member 26, by means of the electromagnet 25, for controlling the beam of light rays illuminating the light-sensitive layer, consisting, for example, of chrome albumin, coating the cylindrical surface of the roller A. In consequence hereof the light of the source of light 27 of the recording device, which is the arc, burning in a high-pressure bulb of quartz glass and having a high surface light density, is concentrated by means of the lens system 28 on the plane of the light diaphragm 29, which is a diaphragm of the disc type rotatable around the shaft 29*a* and fitted with holes of different size and is allowed to pass through or is shut off by the said light-shutting member 26 in the order of sequence and at the time rate controlled by the scanning device. The beam of light rays is projected in the form of a picture point of the desired size, which size is adjustable by means of the diaphragm 29, on the light-sensitive layer with which the roller A is coated. The size of the scanning picture point of light, which must be substantially equal to the size of the recording picture point, is adjusted either by means of the screw spindle 23 or by varying the distance between the whole scanning device and the design carrier B or it is adjusted in such a manner that for the purpose of scanning an optical apparatus similar to that of the recording device is employed instead of the more simple arrangement shown on Figure 2, and the light diaphragms of the scanning and recording devices are adjusted so as to make their openings equal. It is in accordance with the diameter of these openings used at any time that I adjust the ratio of transmission between the main shafts and the carriage screw-spindle of the lathe, whilst the time of exposure is adjusted by the suitable selection of the speed of the main shaft of the lathe. In the diagram of Fig. 3 the scanning of the design carrier B by means of the light ray *y* is begun at its left border, progressing in the right-hand direction. The length X of that part of the design carrier which is covered with the design element amounts in the case of this example to one-sixth of the length L of the roller, in consequence whereof the distances between the points of action of the rays of light *a*, *b*, c, *d*, *e*, *f* of the multiple recording device also possess the length X. If, for instance, the axial length $X_1$ of the figure carrier amounts to one third of the length L, the rays of light *b*, *d*, and *f* are simply shut off. If accordingly the length of that part of the design carrier B, on which a design is provided, can be selected at will, whilst the length of roller on which a design is to be provided, is constant, it is also possible for the mutual axial distances of the recording beams of light to be constant and the adjusting devices for varying these distances can be dispensed with. That part of the design carrier, on which part the design element is provided, is limited from the right hand and from the left hand side in the axial direction by black parts $B_1$ and $B_2$. If the ray of light *y* reaches the black part on the right hand side, it is possible for the machine to be automatically stopped by a suitable mechanical or electrical signal pick-up

device. Such a signal pick-up device may be controlled by an electric contact mounted, for instance, on the body of the lathe and closed in this position by the carriage, it being possible for the said contact to be located in the box K shown on Fig. 1. This box may for the purpose of correct adjustment be displaceable on the bar $K_1$ on which it is supported and this bar may be fixed to the tail-stock base. In the case of such an arrangement the contact is operated by the end of the bar **15** if the said bar end is pushing in the peg $K_2$.

Fig. 4 shows the "toppling circuit" employed for controlling the multiple recording device. In this specification and claims the term "toppling circuit" designates a circuit, wherein the variations of the incoming electrical tension or current (the "input") control the outgoing electrical tension or current, or the position of the member controlled by the input, in such a manner that the output or member controlled are inaffected by such variations of the input, the maximum instantaneous value of which lies below a certain, preferably adjustable, limit. If, however, the input surpasses this limit, the output or member is caused to tend to attain instantaneously its maximal predetermined value or position, and to remain at this value or position unaffected by such fluctuations of the input, the minimum value of which does not fall below the limit mentioned above. As soon, however, as this occurs, the output or member tends to regain its above-mentioned original value or position at once and remains there unaffected by such fluctuations of the input the maximum value of which lies below the limit mentioned above, which will be termed hereinafter as the "toppling limit."

In the circuit shown in Fig. 4, on the resistance **40** connected in series with the photocell **18b** the current of the battery **41** produces a voltage drop depending on the illumination of the photocell, which acting as grid tension on the grid circuit of the electron tube **42** will produce a varying voltage drop in the resistance **43** situated in the anode circuit of the said electron tube, which voltage drop is utilised for the grid control of the thyratron tube **44**. This tube is fed by the source of alternating current **45** with an alternating current of relatively high frequency (e. g. 500–10.000 Hertz), which current is transformed by means of the transformer **46**, the primary coil of which is connected into the anode circuit of this tube, to a voltage suitable for feeding the magnets **25** connected in parallel with each other in the secondary circuit of this transformer and which voltage, before being conducted into these magnets, is preferably rectified by means of a rectifier, not shown on the drawing, which may be of any desired type. The higher the speeds of transmission and the degree of fineness with which transmission is taking place, the higher should be the figure selected for the frequency of the source of current **45**. The connection, moreover, may comprise means for changing the sense of transmission, for example from position to negative, to positive from positive or the reverse. Such means may comprise a change-over switch, a further amplifying tube or stage, or other means suitable for this purpose, all well-known in the art, and the circuit may also comprise means for adjusting the toppling limit, for example by changing or adjusting the working value of any or both of the resistances **40** and **43**, in any suitable way.

Fig. 5 shows the way of operating, with a single source of light, three recording devices. The light of the lamp **27** (shown also on Fig. 2) illuminates not only the lens system **28** shown also on Fig. 2, but also the mutually identical lenses **39**. The parallel beams of light produced by these are reflected by prisms **31** and **32** onto the lens systems **33** and **34**, from which they are thrown further in the way shown in Fig. 2. In view of the fact that parallel beams of light rays are produced by the lenses **39**, the recording devices containing the lens systems **33** and **34** are displaceable relatively to the recording device containing the system **28**, for which purpose their tubes **37** and **38** respectively are displaceable in the tubes **35** and **36** fixed to the casing of the lamp **27**.

I do not wish to limit myself to the optical recording device described, as also other devices may advantageously be employed, for example the well-known glow-tube devices of photoradio apparatus, or the device described hereinafter in connection with Figures 6 and 7 of the drawing.

This device is specially suitable for use with highly light sensitive layers and/or fine scanning, because its source of light consists of electrical discharges taking place under atmospherical pressure, such as spark discharges, preferably attaining after the first discharge, the characteristics of an arc, and these discharges may be brought so near to the light-sensitive layer as to enable the optical systems of the recording devices to be dispensed with, and moreover, in accordance with the above, the mechanical control of the rays of light can also be dispensed with. The circuit which can be employed in this case is shown by Fig. 6. This differs from the circuit according to Fig. 4, only in that the transformers **47** feeding the spark gaps **48** are mutually connected in series in the circuit of the secondary coil of the transformer **46**. These transformers **47** are preferably igniting coils such as used for the storage battery ignitions of the internal combustion engines of motor cars, whilst the spark gaps **48** may be modified sparking plugs. In case of connecting the primary coils of the igniting coils in series, it is also possible to dispense with the transformer **46**.

Such a sparking plug modified and mounted so as to be suitable for being used as a source of light is shown on Fig. 7. The insulated central electrode **49** of the sparking plug is deflected in such a manner as to ensure that the centre of the spark gap provided between this electrode and the other electrode **50** fixed into the body and also suitably deflected should fall into the axial centre line of the sparking plug. The spark gap is preferably adjusted to smaller than the normal e. g. to 0.2–0.4 mm. On the thread cut on the end of the long stem sparking plug shown on the drawing, the cap **51** is screwed, the front wall **52** of which is made of insulating material impervious to light, e. g. of mica plate varnished black, at the centre of which a hole **53** of suitable diameter is provided. The mica plate **52** is held in position by the border provided on the cap, which latter may for instance be made of brass. In certain cases two parallel such mica plates in some distance of each other may be provided. The sparking plug **55** is screwed with the normal sparking plug thread into the iron plate **54** which to some extent corresponds in this apparatus to the bar **15** of Fig. 1 and accordingly carries all the sparking plugs, each of which is screwed into the thread of one of the holes provided at suitable distances from each other on the said iron plate. Fig. 7 shows that with this arrangement

it is possible to bring the source of light constituted by the spark gap very near to the light sensitive layer by which the surface of the roller A is coated but far enough to prevent that the spark should be able to spark over from the electrode 49 to the roller A, for which purpose the plate 54 and the parts connecting the igniting coils with the same may be insulated from the lathe. In the cap 51 it is advisable to provide the holes 56 and 57 situated in the shell parts of the same, projecting beyond the end of the sparking plug, the said holes assuring the necessary air circulation and being also suitable for being used as test openings.

According to my invention, I can also use as photographical recording means Lenard rays issuing preferably from a metal-bulbed Lenard tube provided with a Lenard window the size of which approximately corresponds to the line width of the transmission, and is therefore very small. Lenard tubes suitable for this purpose are preferably incandescent cathode tubes fitted with grid control, which are preferably in the connection according to Fig. 5 connected in place of the thyratron and controlled directly by the amplified photovoltage, because with these tubes it is possible to operate with so high speeds of transmission, at which the lag of the thyratron could already have a disturbing effect. This way of transmission possesses the drawback that the Lenard tubes which are rather expensive and are at present only made to order, and which are preferably completely evacuated, have, in the interest of their correct operation and of maintaining their term of life, to be pumped or gettered from time to time, or permanently, for the purpose of removing the air entering them by diffusion, but this is offset by the advantage that it is possible, owing to the very strong actinic effect of the rays and of the possibility of controlling them accurately without any lag, to raise the speed of transmission very high, and in consequence hereof it is possible to operate at completely satisfactory speeds also with the employment of less delicate layers of lower light-sensitivity. Owing to this high speed of transmission, perfectly satisfactory performance is obtained with apparatus of this type also if only a single Lenard tube operating as recording device is controlled by the scanning device. It is, however, also possible to employ a plurality of Lenard tubes, or the single Lenard tube may be controlled in succession by a number of scanning devices situated at a distance from each other equal to the axial length of the design carrier, if it is not desired to employ a design carrier of an axial length corresponding to the total length of the roller. Owing to the well-known dispersion of the Lenard rays in air, it is necessary that the window of the Lenard tube also should be brought so near to the roller surface that the path of the rays in the air should be of the order of magnitude of one tenth of a millimetre or at most of a millimetre, but there is no difficulty in doing so.

With all the photographic recording methods mentioned above, wherein the light sensitive layer of any suitable known kind is distributed on the surface on the roller in known manner and "developed" after exposure, whereon the roller is being etched in any suitable known manner, it is necessary that the transference, or, in case that the scanning and recording devices are spaced apart from each other for the purpose of distance transmission or simultaneous transmission onto a plurality of rollers, at least the recording should take place in a dark room, as was usual also in case of the photolitographic processes used up to now. With the process according to my invention it is possible to obviate this drawback by using some suitable kind of visual recording. This may be done by using as recording devices the "ink vapor" devices known in the art of photo-radio transmission, by means of which a suitable solution may be sprayed onto the surface of the roller, thereby for example rendering the same locally acid-proof or affecting it or any suitable layer adherent to it chemically in any other desired way. It is also possible to use electrical discharges acting directly on the surface of the roller or the layer adherent to it. In first case, for example, the metal surface, for example of aluminium, may be locally oxidixed, the oxide layer thus produced adhering strongly to the metal, whereafter the roller may after suitable treatment be etched. In the second case, the oxidation may locally remove the acid-proof layer, for example of suitable varnish, containing, for example, nitrocellulse and carbon black, by burning it off and thus also rendering the roller ready for etching. In case the electrical discharge is allowed to act directly on the surface of the roller or the layer adhering thereto, it is also possible to employ spark plugs as electrodes in a manner similar to that shown on Fig. 7. In this case the electrode 50 shown on this figure is removed, the electrode 51 is left in its central position, its end is sharpened into a point and the discharge is allowed to spark over through the opening 53 of the mica plate 52 to the roller A connected as the other electrode. The distance between the roller and the sparking plug can in both cases be easily adjusted by screwing the sparking plug 55. If it is desired to work in a stream of oxygen, the electrode 49 is, at least at its point, made of platinum, a cap 51 closing gas-tightly is employed, and, employing by way of sparking plug the known type of sparking plug comprising a central electrode perforated in its axial direction, the oxygen is introduced through the perforation of this electrode and allowed to stream through the hole 53 on the roller surface arranged at a distance of the order of magnitude of one tenth of a millimetre from it.

According to my invention, I may also employ mechanical recording means, in which case, however, I prefer to work in a widely different manner from those proposed up to now for the photoelectrical engraving of printing plates or rollers. According to my invention, I prefer to cut into the material of the roller itself, or, more preferably, to remove the material of an acid-proof layer adhering to the surface of the roller, in such a way that both the width and the depth of the resulting grooves should be constant. Therefore, if I employ cutting tools, these preferably have a flat cutting edge instead of the usual V-shaped edges, but I preferably employ constantly revolving cutting means, such as milling cutters, as described below in connection with Figures 8 and 9 of the drawings.

The cutting tool of the recording device shown on Fig. 8 consists of the constantly revolving milling cutter 60, which may consist of steel or tungsten wire of suitable diameter corresponding to the desired scanning and recording line width, and provided with cutting edges in any suitable manner. The cutter 60 is held by the socket 61, this being fastened to the hollow shaft

62, made of light metal alloy and borne by the ball bearings 69*a* mounted into the supporting plates 69. This shaft 62 is rotated by means of the pulley wheel 66, which bears the pin 64 extending through a slit 63 of the shaft, so that the shaft can be displaced axially in respect to the driving wheel 66 and yet be constantly driven by the same. The disk 65 of ferromagnetic material, such as soft iron, is fastened on the shaft 62 by means of screw nuts 65*a*, and the shaft bears on its end the cap 67. The electromagnets 71 and 72 are fastened to the supporting bolts 70 by nuts 70*a*, these bolts also being fastened by nuts 73*a* to the shield plate 73, which in turn is fastened by welding to the hollow supporting fork 74, the end of which is held in the head 75 of the brace 76 fastened to the piece 77 inserted into the carriage 13 of the lathe shown on Fig. 1. The shield plate 73 also bears the hollow pin 68, provided with a slidable feeler 68*a*, which actuates an electrical contact (not shown on this figure) located in the casing 68*b*. The milling cutter 60 is normally spaced from the varnish layer *a* adhering to the surface of the roller A to a little distance of the order of magnitude of some tenths of millimetres, and revolves at a high speed of say 3000 or more revolutions per minutes, the pulley wheel being driven to this end by pulley drive from any suitable motor (not shown). The electrical connecting wires of the magnets and contact are led through the hollow fork 74, to be connected as shown in Fig. 9, into a magnetical toppling circuit. The diagram of Fig. 9 shows in its upper part the magnet windings 71*a* and 71*b* of the left-hand magnet, the disk 65, the winding 72 of the right hand magnet, and the cap 67 operating by means of the feeler 68*a* the contact 84, and in its lower part the transformer 46, the primary winding 46*a* is connected in the anode circuit of the thyratron tube 44 shown on Fig. 4. This tube, however, can be substituted in this case by a large output electron tube, as the toppling character of the connection is already ensured by the arrangement of its magnetic fields acting against each other. The secondary coil 46*b* of transformer shown on this figure is connected to the rectifier 78 to supply a rectified current to the leads 79, through which no current flows when the milling cutter does not touch the surface of the roller A, as in the positions shown on Figures 8 and 9. In this position of the device no current flows through the coil 71*a*, but the coils 71*b* and 72 are supplied with direct current from the battery or rectifier 80. The coil 72 is supplied with current through the resistance coil of the potentiometer 81 and through the adjustable resistance 82, as the contacts 84 adapted to short-circuit this resistance are being held open in this position of the device by the feeler 68*a* and cap 67. The coil 71*b* is supplied with current through the adjustable contact of the potentiometer 81, the adjustable resistance 85 and the (omissible) self-induction coil 86. These currents and the distances of the poles of the magnets 71 and 72 from the disk 65 are adjusted so as to let the disk 65 rotate in close proximity to the poles of the magnet 72, although the coil 71*b* is carrying current, and that therefore the cutter 60 is out of contact with the roller. If a suitable current flows through the leads 79, the cutter 60 is instantaneously brought into full action, i. e. pressed onto the roller with full force, because the winding 71*a* now receives current through the resistance 82. This resistance has such a value that the voltage drop caused on it by the current of the coil 71 is of about the same magnitude, but of opposite sense than that caused by the current of battery 80, and therefore compensates the latter to the effect that the coil 72 receives less or no current from this battery. To obviate the necessity of very exact compensation a rectifier (not shown) or unidirectional valve may be inserted between resistance 82 and battery 80, and another between resistance 82 and coil 72. If now coil 72 receives no current, the voltage drop along the resistance 81 is diminished so as to cause coil 71*b* to receive a stronger current than formerly. As soon as the cutter 60 has been moved to touch the roller, the feeler 68*a* causes the contacts 84 to close, and therefore if now the current flowing through leads 79 is interrupted, coil 72 will receive a stronger and coil 71*b* a weaker current than those corresponding to the position of the device shown in Fig. 9, and the cutter 60 will therefore be rapidly moved back to its original position, on reaching which it again opens the contacts 84. The self-induction 86 is intended to lessen the fluctuations of magnetic force caused by the fluctuations of the rectified current by shifting the relative phases of the fluctuations of current in coils 71*a* and 71*b*. This device can be adjusted so that the time necessary for the cutter to come into contact with the roller be the same as that of its coming out of contact with the roller, and both can be very short, thus ensuring good and suitably rapid transmission, and has the advantage that the mechanical power necessary for removing material from the roller has to be supplied only to a very small extent by the motor rotating the roller during transmission, thus greatly reducing vibrations.

Figures 10 to 13 show details of an apparatus especially suitable for scanning with reflected light, according to usual practice, and for transmitting the design elements from a design carrier bearing only a single design element. In Figure 10 identical reference symbols indicate identical parts with those shown on Fig. 1.

According to the process described in connection with Fig. 1, the design carrier having the shape of an endless band had to be made to exactly or approximately the same peripheral length as the circumference of the roller to be prepared, and therefore, if the peripheral length of the design element to be transmitted was a fraction of the circumferential length of the roller, the design element had to be reproduced on the design carrier in peripheral direction several times in registered succession. In order to obviate this necessity, in the apparatus according to Fig. 10, the gear ratio of the positive drive between the rotating means of the scanning drum and the rotating means of the roller is variable, and can be adjusted so that the scanning drum having a smaller diameter than the roller can be rotated at an angular speed, which is such a whole-numbered multiple of the angular speed of the roller that their peripheral speeds are exactly or substantially equal. With such an arrangement, the design element of the scanned design carrier will be transferred to the roller in peripheral direction as many times in succession, as many revolutions the scanning drum makes during one revolution of the roller, it being understood that the scanning and recording devices be moving in axial direction with identical linear speeds during the transmission.

It is obvious that this process can also be reversed, driving the roller with a multiple of the angular speed of the scanning drum, if a small roller has to be made from a design carrier bearing the design element several times in peripheral succession.

In the apparatus shown on Fig. 10, the lathe is provided with hollow holders 6*a* and 7*a*, provided with clamping means 6*b* and 7*b*, and the members 6 and 7 supporting the bearings 8 and 9 of the shaft 11 are slidably and adjustably mounted in these holders. The brackets 6*c* and 7*c* are provided with the gripping means 6*d* and 7*d*, provided with the clamping means 6*e* and 7*e*, for holding the rod 95. On this rod the gripping means 96 provided with the clamping means 96*a* are slidably mounted, for holding, by means of the bracket 97, the bearing 98 of the shaft 99, rotatably mounted in bearing 98. The shaft 99 bears the headstock 100, provided with three gripping means 100*a*, 100*b* and 100*c*, the first- and last-mentioned of these being visible on the drawing. On the end of the shaft 11 an exactly alike headstock 94 is mounted, provided with the gripping means 94*a*, 94*b* and 94c, all of which are shown on Figs. 10 and 12 of the drawing. These headstocks hold and are apt to rotate the special scanning drum 90, shown also in detail on Figures 11, 12 and 13. The chain wheels 3 and 4 are changeable on the shaft 1, and in the present example, where the diameter of the scanning drum 90 is one-half of the diameter of the roller A, provide, together with the chain wheels 3*b* and 4*b* and the chains 3*a* and 4*a*, a positive drive, by means of which shaft 11 is driven with twice the angular speed of shaft 1 from this latter. Therefore, if the design carrier to be applied to drum 90 bears a single design element, this will be transferred to the roller B twice in peripheral succession, if the design carrier bears a design element twice repeated on it in peripheral succession, this will be transferred to the roller four times in peripheral succession, and so on.

The special scanning drum 90 consists of a hollow metal tube, bearing a longitudinal slit 92, preferably positioned in the longitudinal groove 91. The ends of this tube are preferably turned to a smaller diameter, and rings 90*x* shown on the left side of Figure 13 in cross-section and on the right side of the same figure in side view are adapted to be placed on these ends, after the drum has been compressed so as to cause the slit 92 to close. The design carrier is formed to an endless band, the circumference of which corresponds to that of the scanning drum, by pasting, with any suitable adhesive, its ends to the stripe 93 of suitable material, e. g. film or paper, which can take place in the groove 91. This having been done, the design carrier is slipped in a manner similar to the placing of a phonograph record on its cylinder, onto the scanning drum 90, with the strip 93 in the groove 92. Thereafter the rings 90*x* are removed, whereon the drum, owing to the elasticity of its material, tends to regain its former exactly cylindrical shape, thereby tightening the fit of the design carrier B on it to such an extent that no additional fastening is necessary as a rule. If, however, the design carrier should still be loose on the drum, the diameter of the latter can be iscreased by tightening the clamping means of the headstocks 94 and 100, engaging the internal surface of the drum 90, to the extent necessary for a tight fit of the design carrier on the drum.

If the ends of the design carrier B should not fit exactly to each other, the groove formed between them can be filled out with a suitable plastic, rapidly hardening material like dentists cement, and the connecting lines ensuring the continuity of the design on the design carrier be drawn on this material. Eventually disturbing lines of boundary shown by the ends of the design carrier can be suppressed from transmission by suitable adjustment of the toppling limit of the toppling circuit.

If I wish, according to my invention, with any of the processes and apparatus described above, to manufacture several individual rollers for printing a multicoloured design from an identical, multicoloured design carrier by selectively scanning the same, I proceed as follows.

I prepare, for example by hand drawing and painting on paper, a design carrier, on which the differently-coloured parts of the design are painted with different colours, preferably of the kind described hereinafter, and not identical with the colours intended to print with the roller. This having been done, I cover all those parts of the design carrier, which are still uncoloured, with solid black or other such paint, as will not let through or (in case of scanning with reflected light) reflect light to any appreciable degree. I now scan this design carrier, preferably also previously formed to an endless band, either in a toppling circuit several times in succession, and readjust the toppling limit of said circuit with simultaneous change of the photocell for each scanning, or scan it repeatedly with changes of the light filter interposed in this case between the source of light and the photoelectric means affected by it, preferably also in toppling circuit with the recorder or recorders, or employ more of these steps in combination with each other.

In the case of repeated scannings with the same photoelectric means in toppling circuit, with the same photocell, but changes of the light filter, I use a design carrier, on which the different colours are such ones that the spectrum of each of these contains no such lines, which occur also in another colour, or at least in no appreciable extent, i. e. the spectra of these colours do not overlap to any appreciable extent. Each scanning is made with an interposed colour filter or other means to give a light of suitable wavelength corresponding to the colour just to be scanned, so that when the scanning ray of light falls through or on parts of the design carrier bearing another colour than that I just wish to transmit, or black, the photoelectric means remain unaffected, and therefore by each scanning I transfer only those parts of the design, which are painted with the colour I just wish to transmit, thus successively producing the different individual rollers of the set. Owing to the different sensibility of the photocell I preferably adjust the toppling limit of the circuit for each scanning to suit the individual requirements of that scanning. Although I may vary the wavelength and/or spectral width, i. e. the range of wavelengths contained in the spectrum of the light used within wide limits ranging, for example, from monochromatic to white, the expression "light" designating in this specification and claims any radiation able to affect photoelectric means, I prefer to use visible light of a wavelength of about 4200 to 7000 Angström, and colour filters giving a light, the spectrum of which has a width of about 100 to 500 Angströms generally.

I wish to point out that although I have de-

scribed by process in connection with scanning a design carrier in the shape of an endless band, my invention is not limited to this way of proceeding, as I may attain the registering of the design element also on other ways, such as, for example, scanning a design carrier covering only one-half of the circumference (180 central geometrical degrees) of the scanning drum with two scanning devices diametrally opposite to each other on different sides of the scanning drum, thus with each of these scanning the same drum along two of its generatrices opposite to each other, and therefore also distant from each other on the circumference of the drum with 180 geometrical degrees, both of these devices controlling the same recording device or devices alternatively in succession.

Also, various other changes may be made in the details disclosed in the foregoing specification without departing from the invention or sacrificing the advantages thereof.

LORÁND DE TAVY.

PUBLISHED
MAY 18, 1943.
BY A. P. C.

L. DE TAVY
PRODUCTION OF ROLLERS
Filed April 27, 1937

Serial No.
139,213
2 Sheets-Sheet 1

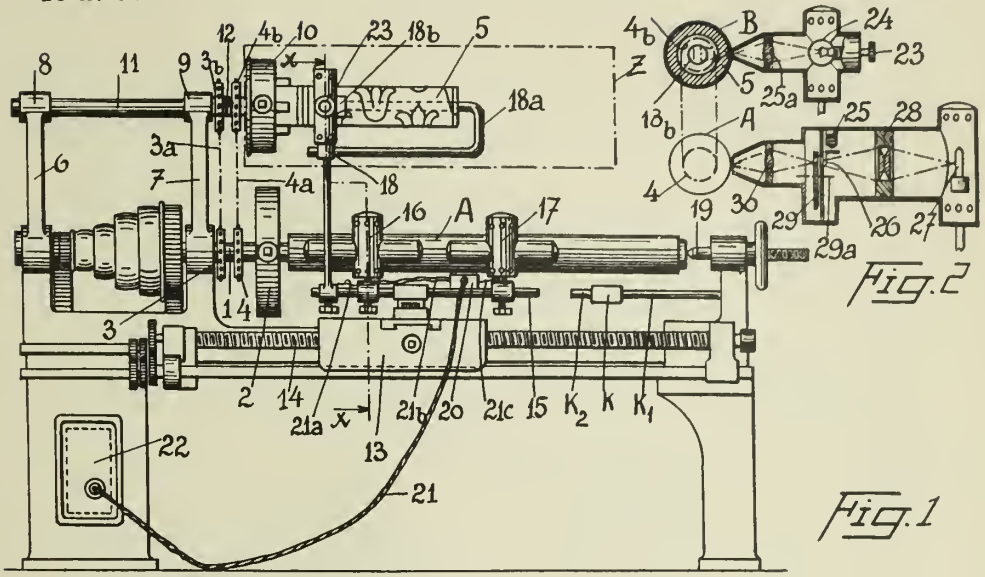


Fig. 2

Fig. 1

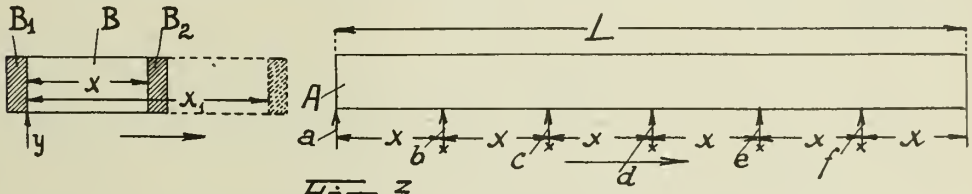


Fig. 3

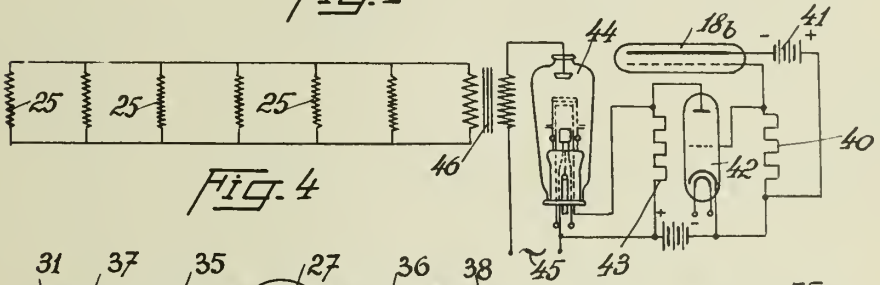


Fig. 4

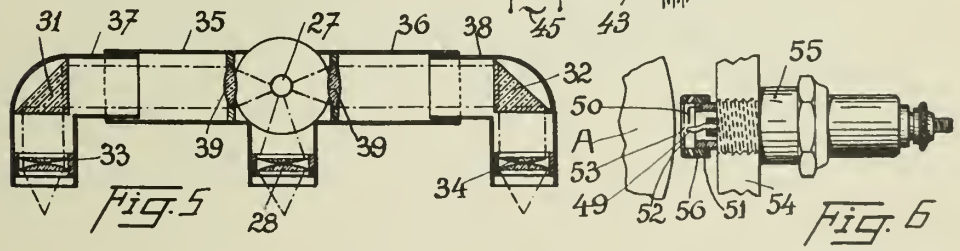


Fig. 5

Fig. 6

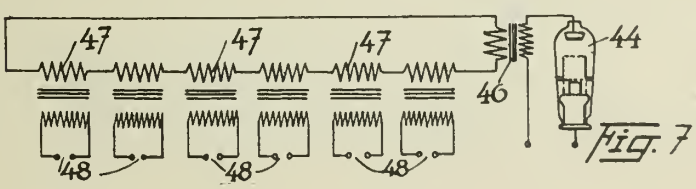


Fig. 7

Laurent de Tavy
INVENTOR-
BY Michaelis & Michaelis
ATTORNEYS

PUBLISHED
MAY 18, 1943.
BY A. P. C.

L. DE TAVY
PRODUCTION OF ROLLERS
Filed April 27, 1937

Serial No.
139,213
2 Sheets-Sheet 2

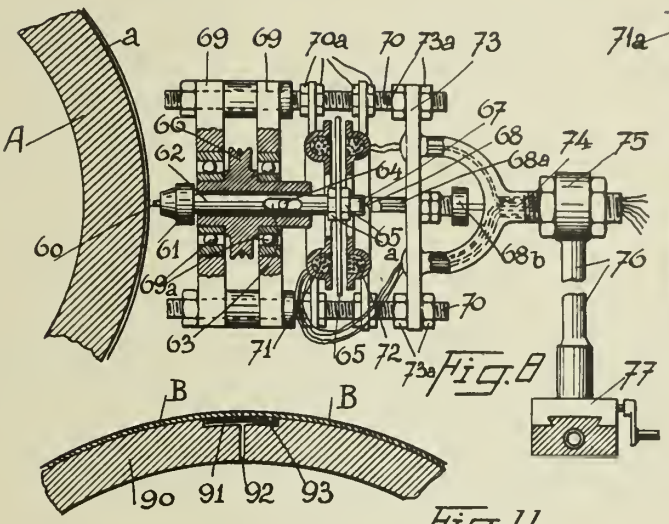


Fig. 8




Fig. 11

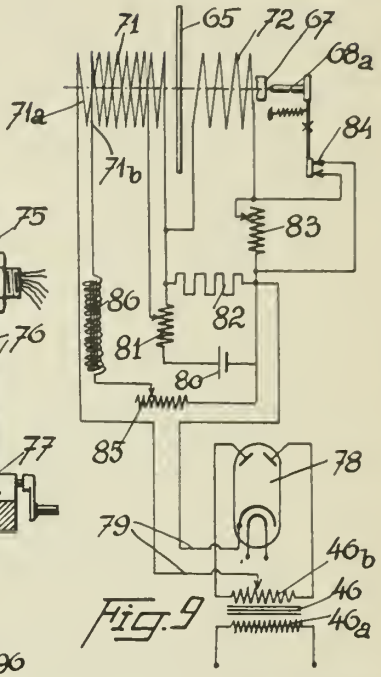


Fig. 9

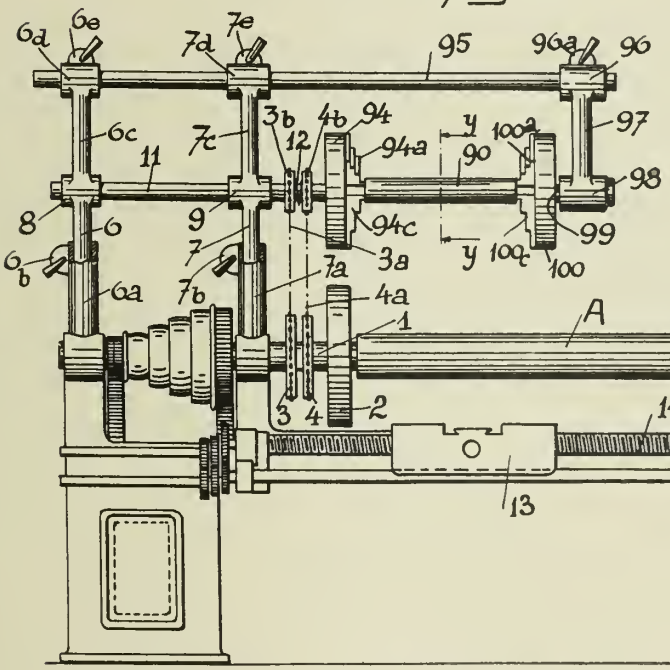


Fig. 10

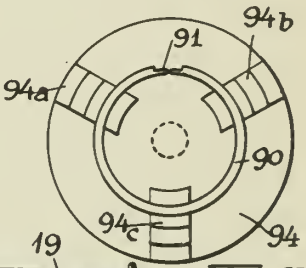


Fig. 12

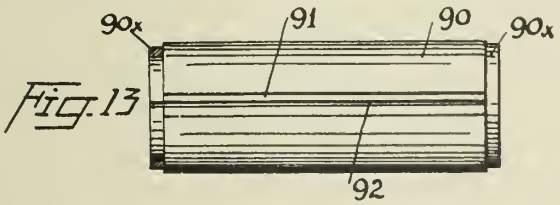


Fig. 13

Laurent de Tavy
INVENTOR-
BY Michaëlis & Michaëlis
ATTORNEYS

Published May 18, 1943

Serial No. 139,606

# ALIEN PROPERTY CUSTODIAN

## METHOD OF PRODUCING ALBUMIN OF WHEY

Karl Kremers, Aachen, and Heinz G. Hofmann, Aachen-Soers, Germany; vested in the Alien Property Custodian

Application filed April 28, 1937

According to Patent 613,124 albumen is produced of whey by changing colloidal conditions of lactalbumen dissolved in whey by direct electric current so that it is separated from whey.

In acid solution albumen travels to the cathode if direct electric current is switched on being separated here from whey while at the same time acid is concentrated at the anode. By this albumin runs the risk of coming in contact with the acid which would reduce quality of obtained product.

The inventors have found that soiling of separated albumen by the stuff concentrated at the anode can be prevented by separating the electrodes from each other with a diaphragm. The albumen produced in that way tastes better than the albumen soiled by the anode-stuff and may be used in larger extend especially for food-stuff.

One form of this method is given by the annexed sketch.

The anode 1 formed as a tube surrounds the tubular diaphragm 2 and the cathode fixed in the latter. The whey which is to work up enters the anode-room at 4. There is also an opening 5 for whey in the cathode-room. The albumen which is separated here comes out of the apparatus at 6. The anode-room has got a sink at 7 for the liquid collected at the anode. In this case diaphragm consists of a fabric that is pervious to liquid in a certain degree.

KARL KREMERS.
HEINZ G. HOFMANN.

PUBLISHED
MAY 18, 1943.
BY A. P. C.

K. KREMERS ET AL
METHOD OF PRODUCING ALBUMIN OF WHEY
Filed April 28, 1937

Serial No.
139,606

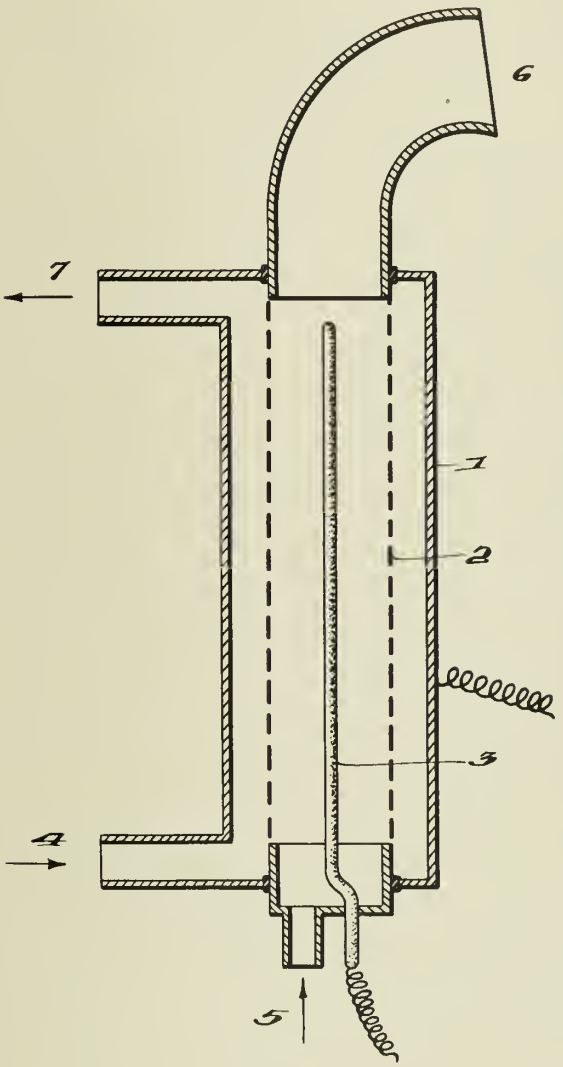


Inventors
Karl Kremers
Heinz G. Hofmann,

By Edmund H. Parry Jr
Attorney

Published May 18, 1943 Serial No. 151,347

# ALIEN PROPERTY CUSTODIAN

## CONTROL CIRCUITS

Rudolf Urtel, Berlin, S. W. 11, Germany; vested in the Alien Property Custodian

Application filed July 1, 1937

In the transmission of pictures for television it is known from the earlier art to modulate a carrier wave by the synchronizing impulses beyond a certain fixed amplitude value of the carrier, while the content of the picture, i. e., the video signals proper, are transmitted by reducing the amplitude of the carrier wave below the said fixed value.

The present invention deals with the problem of insuring, in connection with the said transmission method, a fading regulation or volume control at the receiving end. This problem is closely allied to the problem of transmitting the average or mean picture shading value or picture brightness (density) which is indispensable if faithful picture re-creation at the receiving end is required. A number of suggestions have been disclosed in the prior art to reintroduce at the receiving end the average picture brightness and to insure fading regulation or compensation. These earlier methods shall be compared in what follows with the object of the invention by reference to the accompanying drawing.

Referring to Figs. 1 to 4 of the drawing, the horizontal coordinate stands for time and the vertical for the amplitude of the carrier wave, numeral 1 standing for the maximum carrier amplitude, and black for a carrier amplitude of 0.7 approximately, while white corresponds to zero carrier amplitude. Under certain circumstances it may also be expedient to coordinate a small finite carrier amplitude to white picture portions or elements rather than zero amplitude, though this point shall be left out of consideration in the following considerations for the sake of greater simplicity of discussion.

Referring to Fig. 1, the shape of the envelope is represented for a number of lines of picture for which a comparatively great mean brightness exists, while on the right-hand side is indicated the shape of the envelope for a few lines characterized by less average brightness. Also for the sake of simplicity, the distribution of brightness or shading values within the various picture lines or strips (scanning lines) has been assumed to be constant, both in this figure as well as in the following ones.

If the potential obtained at the receiving end by means of rectification of a carrier wave modulated in a way as shown in Fig. 1 is further amplified in an A. F. amplifier, the mean brightness which represents a d. c. component of the A. F. is lost seeing that for practical reasons it is necessary to employ what is known as an a. c. amplifier, that is to say, an amplifier which comprises capacitive or inductive coupling means between the various stages thereof. What thus results at the output end of the a. c. amplifier is a voltage wave having a shape as shown in Fig. 2. Methods and circuit organizations have been disclosed in the earlier art which have the aim and purpose to re-introduce the lost average picture brightness. This is accomplishable, for instance, by impressing the potential Fig. 2 in such a way upon the circuit arrangement Fig. 5 that the synchronizing impulses at the control grid of the tube are in the positive sense. The time-constant of condenser 10 and resistance 11 is high in contrast to the period of the impulses so that the condenser 10 which is charged up by the grid current of the tube is unable to become discharged in the interval between two impulses. But when the impulse amplitude decreases, in other words, when at the control grid of the tube in Fig. 5 a potential of a shape as shown in Fig. 2 is supplied, the condenser 10 is discharged to such a point where, at each crest value of a synchronizing impulse, a grid current will start to flow, and thus, in each instance, will initiate a new small charge of the condenser 10.

The discharge of condenser 10 from the value corresponding to a high average brightness or shading value to that corresponding to a small mean value, to be sure, proceeds very slowly; but it will be remembered that also the mean brightness, as a general rule, does not change suddenly and abruptly, with the result that the incoming and recreated image will fairly closely follow the original also as regards the changes of the average brightness.

These conditions are shown in more detail by the aid of the plate current-grid voltage characteristic of the tube. The zero line of the voltage wave Fig. 2 becomes shifted because of the fluctuations in the charge of the condenser 10 at the control grid of the tube; hence, the shape of the plate current again reflects the mean picture brightness. As can be seen from Fig. 6, the form of the plate current perfectly agrees with Fig. 1.

The circuit arrangement as here described for the reintroduction of the mean brightness is an instance of the so-called A. F. crest or peak measurement; in fact, also all other circuit organizations that have been disclosed in the prior art for the purpose of reintroducing the mean brightness may be regarded to fall in the same class.

It has also been suggested in the art to provide ways and means adapted to insure fading

compensation or V. C. in connection with television or video signals as in Fig. 1, at the receiving end. As a result of fading, from an envelope of the kind shown in Fig. 3 for the sending end, there results an A. F. potential having a shape as shown in Fig. 4. To be sure, by A. F. peak measurement at the receiving end it is feasible to insure fading compensation, but only on the condition that the mean picture brightness or shading value stays constant and stable throughout the entire transmission or program.

For it will be understood that, so far as the receiver apparatus is concerned, there is no chance to ascertain by means of measurement whether a reduction in the amplitude of the synchronizing impulses is ascribable and due to a reduction in the mean picture brightness (right-hand side in Fig. 2) or to more marked fading. The requirement to reintroduce the mean picture brightness into the A. F. at the receiver end together with the demand to insure fading compensation in the A. F. energy coming in at the receiver, are therefore contradictory. In other words, mean picture brightness will be reintroducible only if the transmission channel is free from fading, while, on the other hand, V. C. or fading compensation will be accomplishable only if the mean brightness of the picture points is stable.

Now, according to this invention a circuit organization is suggested which permits to secure fading compensation in connection with a modulation method of the kind illustrated in Fig. 1 while yet reproducing the variations of the mean brightness in the incoming picture. For this purpose, contradistinct to the A. F. peak measuring method mentioned above, recourse is had to an R. F. peak measurement. What is meant by that is that the synchronizing impulses in the form of R. F. energy are fed to a device which furnishes a voltage which will be a function of the impulse amplitude coming in at the receiving end. This, for instance, is attainable by impressing the amplified RF potential upon a biased diode so that the plate current of the diode will furnish a measure and criterion for the amplitude of the carrier alternations constituting the synchronizing impulse. As will be seen, it is thus feasible, by the aid of the drop of potential caused by the plate current of the diode, to act upon the grid biasing potential of one or of several tubes of the RF amplifier in a way well known in the art.

RUDOLF URTEL.

PUBLISHED
MAY 18, 1943.
BY A. P. C.

R. URTEL

CONTROL CIRCUITS

Filed July 1, 1937

Serial No.
151,347

Fig. 1

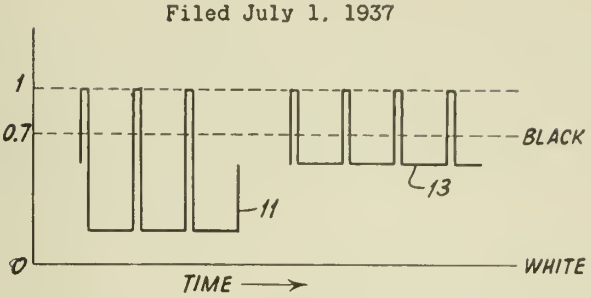


Fig. 2

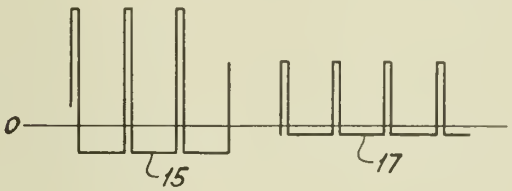


Fig. 3

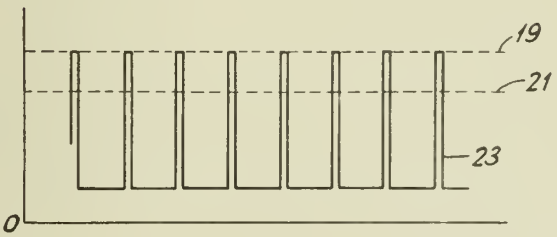


Fig. 4

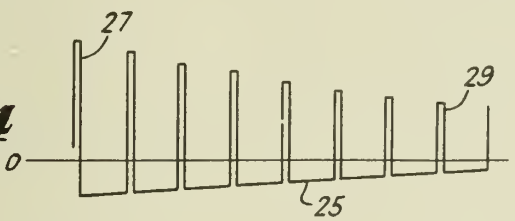


Fig. 6

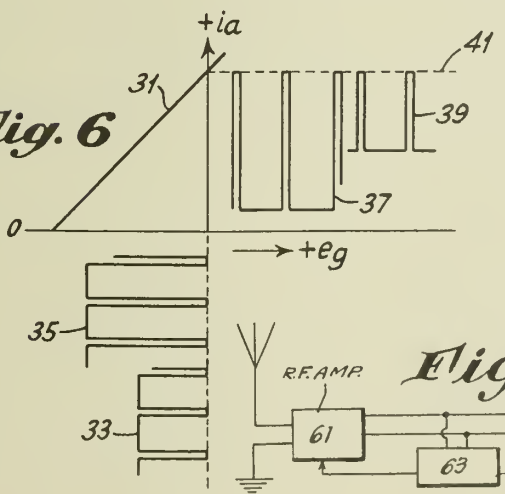


Fig. 5

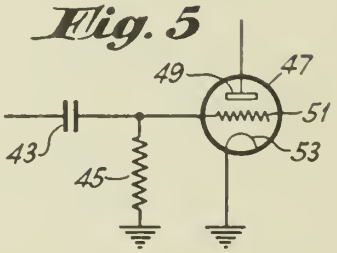


Fig. 7

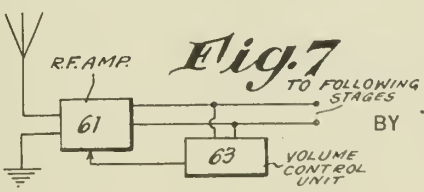


INVENTOR
RUDOLF URTEL
BY
ATTORNEY

Published May 18, 1943

Serial No. 171,214

# ALIEN PROPERTY CUSTODIAN

## AN ALLOY FOR PERMANENT MAGNETS

Walter Dannöhl and Hans Neumann, Berlin-Siemensstadt, Germany; vested in the Alien Property Custodian

No Drawing. Application filed October 27, 1937

The present invention relates to an alloy for permanent magnets.

It is well known in the art to employ as material for the manufacture of permanent magnets both cobalt-nickel-copper alloys and iron-nickel-copper alloys.

It has been found that the magnetic properties of the last-mentioned alloys may be considerably improved if cobalt is added thereto as a fourth constituent so as to result in an iron-nickel-copper-cobalt alloy. Alloys of this composition have various advantages over the ternary nickel-cobalt-copper alloys. Thus, for instance, they are cheaper owing to the partial substitution of iron for cobalt and may be produced in part of home products and are, furthermore, considerably easier to work.

The invention describes an alloy containing 1 to 35% iron, 10 to 45% nickel, 1 to 70% cobalt and 20 to 80% copper; however, with the limitation that the percentages of iron, nickel and cobalt lie in the range between 1:7:49 and 1:0.28:0.04.

Particularly good results may be obtained if the alloy is at first heated above 1000° centigrade, then quenched and finally reheated to a temperature of 500° to 750° centigrade.

In the above-mentioned alloy range the alloys having a percentage of 5 to 25% iron, 15 to 35% nickel, 5 to 40% cobalt and 30 to 60% copper may be particularly mentioned owing to their good magnetic qualities.

The great technical advance attained by the alloys for permanent magnets according to the invention will be now explained by reference to some examples indicated in the following table.

| Alloy No. | Fe | Ni | Co | Cu | $P_r$ | $H_c$ | $B_r.jH_c$ 10 $^5$ |
|---|---|---|---|---|---|---|---|
| 1*a* | 35 | 25 | ----- | 40 | 4600 | 80 | 3.7 |
| *b* | 10 | 25 | *25* | 40 | 4800 | 280 | 13.5 |
| 2*a* | 30 | 30 | ----- | 40 | 4300 | 140 | 6.0 |
| *b* | 15 | 30 | 15 | 40 | 5000 | 220 | 10.6 |
| *c* | 5 | 30 | *25* | 40 | 4300 | 405 | 17.4 |
| 3*a* | 40 | 20 | ----- | 40 | 5100 | 30 | 1.5 |
| *b* | 10 | 20 | *30* | 40 | 5600 | 240 | 12.6 |
| 4*a* | 16 | 28 | ----- | 56 | 3200 | 280 | 9.0 |
| *b* | 9 | 28 | 7 | 56 | 2900 | 395 | 11.5 |
| 5*a* | 27 | 28 | ----- | 45 | 4300 | 150 | 6.4 |
| *b* | 20 | 28 | 7 | 45 | 4300 | 240 | 10.3 |
| 6*a* | 20 | 23 | ----- | 57 | 3640 | 367 | 13.3 |
| *b* | 13 | 23 | 7 | 57 | 3250 | 463 | 15.1 |

In the first column of this table are indicated the alloys of which those designated by *a* refer to iron-nickel-copper, whereas the alloys *b* and *c* are obtained from the alloys *a* by substituting cobalt for a portion of iron. The last three columns of this table indicate the values for the remanence, the coercive force and the magnetic power $B_r.jH_c.10^{-5}$. Particularly noteworthy is the great increase of the coercive force present in every case. Thus, for instance, with an alloy containing 40% iron, 20% nickel and 40% copper, the coercive force increases from 30 to 240 Oersted if cobalt is substituted for 30% iron. At the same time also the remanence increases by 10% from 5,100 to 5,600 Gauss. The technical advance attained by the alloy according to the invention will be readily apparent from the increase in the magnetic power $B_r.jH_c$ from $1.5.10^5$ to $12.6.10^5$.

In the examples 1 and 2 besides the increase in the coercive force also an increase in the remanence is attained, whereas in the alloy 5 the remanence does not vary by substituting cobalt for a portion of iron and decreases in the alloys 4 and 6 by approximately 10%. However, in contradistinction thereto the coercive force is considerably increased so that the product of these two magnitudes results, nevertheless, in a considerable improvement of the magnetic properties as compared to the alloys hitherto known.

The alloys designated by *a* were produced in this case with the most favorable heat treatment in order to attain the best possible magnetic properties. The alloys designated by *b* and *c* were produced in such a manner that the material was at first heated for 10 hours at a temperature of 1,050° and 1,100° centigrade respectively, then quenched in oil, annealed for 1 to 40 hours at a temperature of 600° to 700° centigrade and finally cooled down to room temperature. The fluctuations in the annealing period are found necessary, since it is essential that the best magnetical properties be attained.

In the case of a different composition of the alloy the above-indicated periods and temperatures may, of course, also be varied within certain limits.

Also small amounts of reducing materials; such as, for instance, 1% manganese, small quantities of silicon, magnesium, aluminum and/or beryllium, may be added in a known manner to the alloy.

WALTER DANNÖHL.
HANS NEUMANN.

Published May 18, 1943 Serial No. 172,755

# ALIEN PROPERTY CUSTODIAN

## PUMPING SYSTEM

Fritz Nallinger, Stuttgart, Germany; vested in the Alien Property Custodian

Application filed November 4, 1937

This invention relates to a pumping system and particularly to such a system for pumping a lubricant to various parts of an internal combustion engine.

An object of this invention is the provision of a novel pumping system constituting an improvement of those now known to the art.

Another object of this invention is the provision of a novel and improved pumping system for supplying a lubricant to internal combustion engines.

A further object of this invention is the provision of an improved pumping system capable of delivering a steady flow of fluid irrespective of changes of pressure on the lubricant in the sump.

A specific object of this invention is the provision of a pumping system utilizing gear or similar pumps for supplying lubrication to an airplane engine at constant volume despite variations in aeroplane altitude.

Further objects and advantages of this invention will be apparent from consideration of the specification and as illustrated by the accompanying drawings of possible embodiments of the invention, in which drawings:

Fig. 1 is a more or less diagrammatic view of one form of my novel pumping system;

Fig. 2 is a partial view similar to Fig. 1, illustrating a modified form of pump; and

Fig. 3 is another partial view similar to Fig. 1, illustrating a third modification of my invention.

The pumping system illustrated in Fig. 1 is shown as applied to the lubrication of an internal combustion engine which is adapted to be suitably positioned in an aeroplane (not shown). The engine, diagrammatically indicated by the reference character *a*, has a plurality of points to be lubricated as *b*. The lubricating oil is supplied from a reservoir or sump *c*.

Certain pumps, especially gear pumps, have the unfavorable characteristic that their delivery volume drops rapidly with the reduction of the air pressure upon the lubricant in the sump. This is particularly objectionable in the case of airplane motors, due to the substantial reduction in pressure at higher altitudes. The means to be presently described overcomes this disadvantage.

A pump illustrated as a gear pump *d* lifts the lubricant from the sump *c* and by means of the conduit *e* supplies it to the necessary lubricating points *b*. A second pump *f* is placed in the connecting line *e* above the pump *d*. These pumps are indicated as of relatively different size for reasons which will be later apparent. The pumps *d* and *f* may be driven by any suitable means, but as illustrated in Fig. 1, they may be conveniently driven by a single shaft driven in turn by the aeroplane engine *a*.

A conduit *g* communicating with the conduit *e* between the pumps *d* and *f* leads back to the sump *c*. A normally closed relief valve *h* interposed in the conduit *g* is adapted to normally prevent passage of fluid through the said conduit. The valve *h* is illustrated as a spring and ball valve which upon occurrence of a predetermined pressure on the delivery side of the pump *d* will open to permit passage of fluid to the conduit *g*.

If desired a conduit may be provided, as illustrated, for returning the engine oil from the engine back to the sump.

The operation of the above described pumping system is as follows: The pump *d* has a greater capacity than is necessary for supplying lubricant to the points *b* at ordinary sea leavel atmosphere pressure. The pump *e* will, however, restrict the flow of fluid from pump *d* to the point *b* and if the pump *d* attempts to deliver too much fluid through the pump *f* the pressure on the delivery side of the pump *d* will rise, open the valve *h* and thereby release the excess lubricant and return the latter to the sump *c*, through conduit *g*.

As the aeroplane rises to higher altitudes, the pump *d* will be unable to supply as much lubricant as formerly due to the decrease in atmospheric pressure upon the sump. As the pump *d* however was originally built to have a much greater capacity than necessary even at the highest altitudes it will still be able to deliver sufficient lubricant to the engine through pump *f*. At the lower altitudes where the full capacity of the pump *d* is not utilized, no excess oil is delivered to the engine as it is returned through conduit *g* and valve *h* to the sump *c*.

It will accordingly be seen from the above disclosed operation that just sufficient lubrication will always be supplied to the necessary engine parts. By the use of gear pumps as illustrated, the flow will be constant and by use of a metering device such as the gear pump *f* which is unaffected by excess pressure on its delivery sides in conjunction with the by-pass valve *h*, the amount of lubricant supplied to the parts *b* will remain constant whatever the altitude of the aeroplane.

The pumping system illustrated in Fig. 2 is identical in principle with that of Fig. 1 but in

this modification the pumps *d* and *f* have been combined in a unitary structure.

In the system illustrated in Fig. 3, instead of a pump as the metering device, a throttle *i* is used. In this form of the invention therefore, only one pump is necessary. The throttle *i* can readily be designed to permit passage of the required quantity of fuel only, the remainder being returned to the sump through relief valve *h* and conduit *g*.

Many modifications of my invention will be apparent to those skilled in the art. The type of pump illustrated, while admirably adapted for the described purpose can be replaced by other known suitable pumps. Furthermore the type of control valve *h* is unimportant, it being within the scope of this invention that the valve *h* be variably adjusted by means responsive to atmospheric pressure. Such means might take the form of a metal bellows or any other suitable pressure responsive means known to the art.

The pumping system has been illustrated as wholly without the motor structure. Obviously this need not be the case, but on the other hand the various elements of the system may be positioned in any suitable desired position.

FRITZ NALLINGER.

PUBLISHED
MAY 18, 1943.
BY A. P. C.

F. NALLINGER
PUMPING SYSTEM
Filed Nov. 4, 1937

Serial No.
172,755

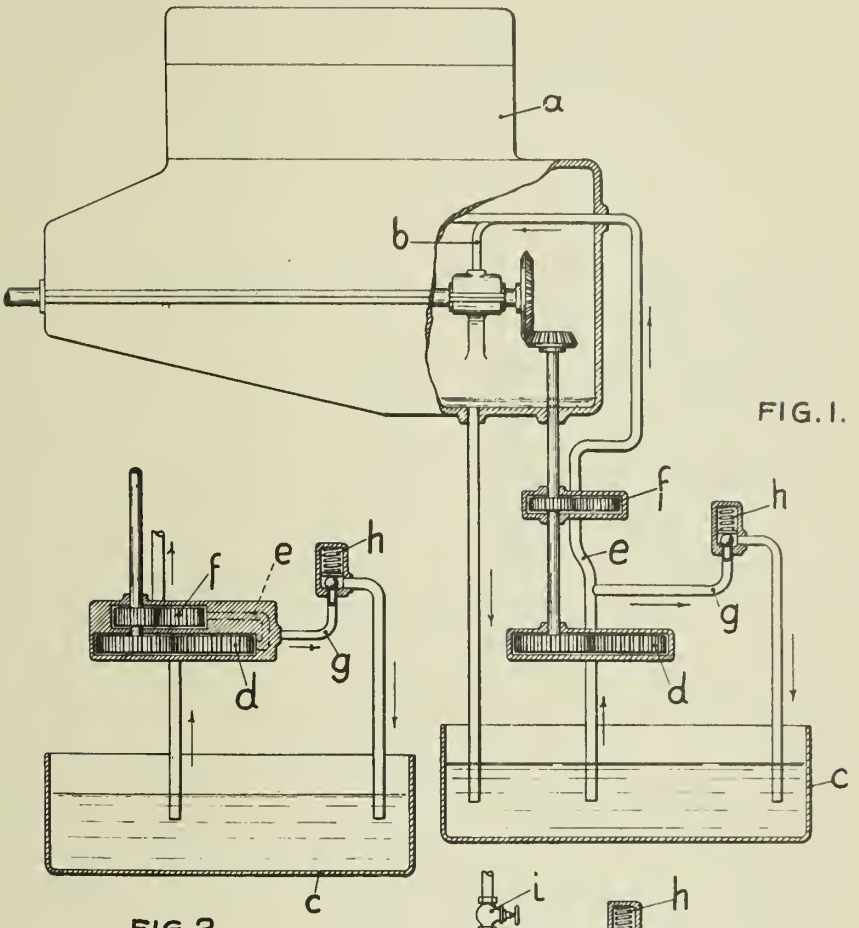


FIG. 1.




FIG. 2.

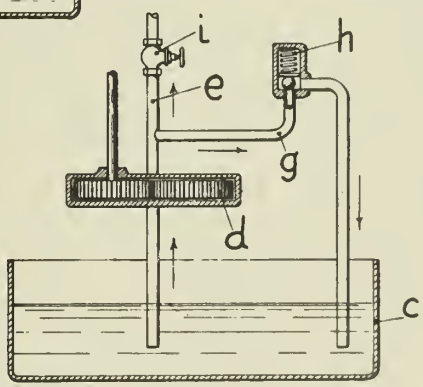


FIG. 3.

INVENTOR:
FRITZ NALLINGER
BY A. A. Hirtz and
Connell Remmers
ATTORNEYS

Published May 18, 1943 Serial No. 177,836

# ALIEN PROPERTY CUSTODIAN

## INSTRUMENT FOR INDICATING THE POSITION OF THE VARIOUS CONTROL ELEMENTS OF AN AIRPLANE

Walter List, Berlin-Spandau, Germany; vested in the Alien Property Custodian

Application filed December 2, 1937

This invention relates to indicating instruments and more particularly to an instrument for indicating the position of the various control elements of an airplane.

An object of the invention is to provide an instrument for visually indicating the position of the various airplane control elements.

A further object is to provide an instrument which visually indicates the position of the landing wheels, tail skid, landing flaps, trimming mechanism and the like to show when these elements are in flight position or in landing position.

Another object is to provide a simple and dependable instrument of the above type in which the various pointers are in convenient and readily observable positions.

Another object is to provide a device of the above type having novel and improved details of construction and combinations of parts.

Various other objects and advantages will be apparent as the nature of the invention is more fully set forth.

Although the novel features which are belived to be characteristic of this invention will be more particularly pointed out in the claims appended hereto, the invention itself will be better understood by referring to the following description, taken in connection with the accompanying drawing forming a part thereof, in which a specific embodiment of the invention has been set forth for purposes of illustration.

In the drawing,

Fig. 1 is a plan view of an instrument with the cover removed to show the pointer arrangement and operating mechanism; and,

Fig. 2 is a front plan view of the complete instrument.

In the following description and in the claims, certain specific terms are used for convenience in referring to various details of the invention. These terms, however, are to be given as broad an interpretation as the state of the art will permit.

Referring to the drawing more in detail, the instrument is shown as comprising a housing 1 having an annular magnetic system 2 provided with gaps in which are disposed the actuating coils 3 to 6 of the indicating instruments to be described. The actuating coils 3 and 4 are provided with pointers 8 and 9, respectively, which are of the general shape of the aircraft landing gear with the wheels attached thereto. These pointers are arranged to extend substantially horizontally when the landing gear is in flight position and to extend vertically when the landing gear is in position for landing.

The actuating coils 5 and 6 are provided with pointers 10 and 11, respectively, which are adapted to indicate the position of other control members such as the landing flaps and the trimming mechanism, as will be described.

An additional indicator 12 may be positioned at the center of the instrument and may be arranged to drop vertically from the position shown in Fig. 1 when the electromagnetic system is energized.

As shown in Fig. 2, the instrument is provided with a cover 15 having an upper opening 16 and a lower opening 17, which openings may be covered by suitable transparent material, such as glass.

On the cover 15, a figure of an aircraft is depicted as at 16'. The lower portion 17' of the wings of this figure may be made of luminous materials. The position of this figure is such that when the pointers 8 and 9 are retracted, the lower edges thereof, representing the landing wheels, barely show below the luminous edges 17' of the wings. When the landing wheels are moved to landing position, the pointers drop to the position indicated by index marks 18. When the landing wheels have been locked in this position, as by actuation of the usual pawl mechanism, the pointers 8 and 9 are further moved to the final position indicated by the index marks 19. When in this position, the pilot knows that the wheels are locked in proper position for landing.

The cover 15 may also have an aperture 20 formed therein, in a position corresponding to the lower position of the indicator 12. This opening may be connected to the image of the plane by designating marks 21. The indicator 12 is connected to suitable repeating mechanism for indicating the position of the tail skid and is retracted as shown in Fig. 1 when the tail skid is in flight position, but drops into registration with the opening 20 of the cover 15 when the tail skid is lowered into landing position.

It is to be understood that the moving coils 3 to 6 may be connected to suitable electrical repeaters, such as electrical resistance transmitters or the like, which may constitute differential instruments, such as crossed-coil measuring instruments. Such repeating mechanisms are well known in the art and are, accordingly, not set forth in detail herein. It is to be understood, however, that the repeating device is so connected that the movement of the pointers represents the mechanical movement of the corresponding

parts of the plane. The pointers are preferably spring loaded in such a way that, upon failure of the electrical circuits, they are retracted to their normal flight position or entirely disappear behind the cover 15 of the instrument.

The pointer 10 is controlled in accordance with the position of the landing flaps by means of an electrical repeater mechanism of the type above mentioned. This pointer may be arranged to extend horizontally when the landing flaps are in position of flight and may extend vertically when the flap is in landing position. Suitable index marks 25 and 26 may be provided to designate the different positions of the pointer 10. The index mark 26 may, for example, designate the landing position and the index mark 25 may designate the starting position of the flaps.

Pointer 11 may be controlled by members serving to regulate the trimming of the airplane and may also be designed to extend horizontally when the trimming mechanism is in normal flight position and may move downwardly to indicate the landing position thereof. Suitable index marks 27 may be used to designate the various positions of this pointer.

The arrangement of the pointers shown in the drawing represents a preferred embodiment of the invention. It is to be understood, however, that this arrangement may be varied in accordance with the requirements of any particular case. For example, the pointer 11 may be used, if desired, in place of indicator 12 to designate the position of the tail skid. If a more conspicuous indication of the tail skid motion is desired, pointer 11 may be attached to a flag which moves in front of the opening 20 to show the gradual sinking of the tail skid.

It will be noted that the above-described instrument provides a means for readily indicating to the pilot the respective positions of the various parts. The arrangement is such that the indications are shown in connection with the image of a plane so that the possibility of error in reading the device is reduced to a minimum.

In the embodiment shown, the various pointers are arranged to stand perpendicular when the parts are in landing position and to rest horizontally when the parts are in flight position. The pointers 8 and 9, representing the position of the landing wheels, only move to their final position when the landing gear mechanism is properly locked; consequently, if these pointers should only reach a position indicated by the index marks 18, the pilot would know that, although the landing gear was in position for landing, it had not yet been locked.

WALTER LIST.

PUBLISHED
MAY 18, 1943.
BY A. P. C.

W. LIST
INSTRUMENT FOR INDICATING THE POSITION OF THE VARIOUS CONTROL ELEMENTS OF AN AIRPLANE
Filed Dec. 2, 1937

Serial No.
177,836

FIG. 1.

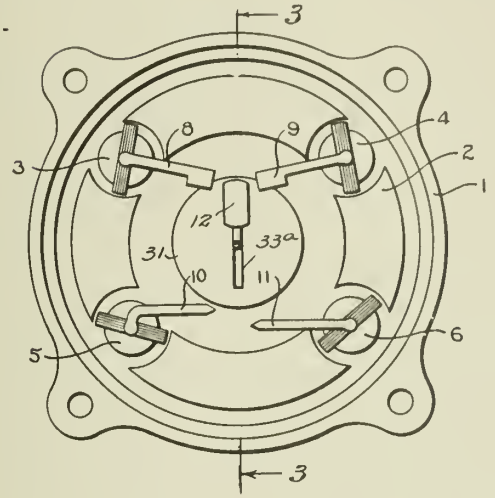


FIG. 2.

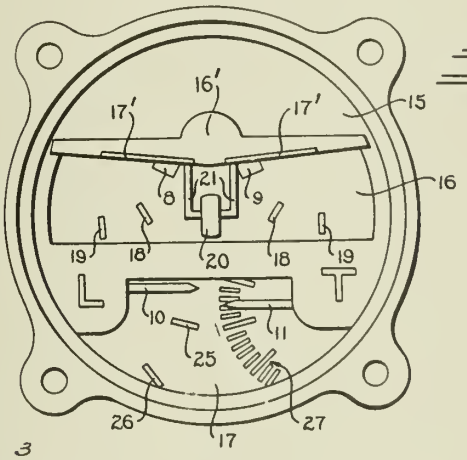


FIG. 3.

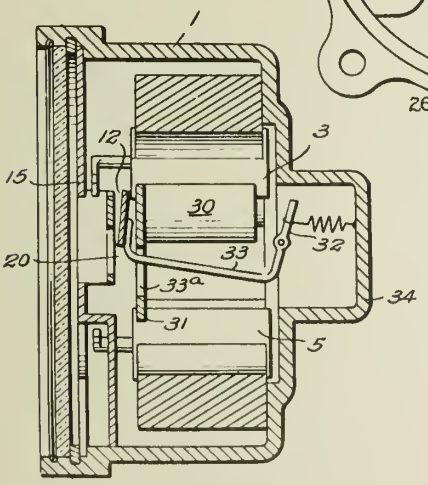


INVENTOR.
Walter List
BY
Stephen Gestrick
ATTORNEY.

Published May 18, 1943

Serial No. 183,581

# ALIEN PROPERTY CUSTODIAN

## AIR CONDITIONING

Edmund Altenkirch, Neuenhagen, near Berlin, Germany; vested in the Alien Property Custodian

Application filed January 6, 1938

This invention relates to an air conditioning apparatus and method of conditioning air having many novel features not heretofore known.

By means of the air conditioning apparatus disclosed in the accompanying specification, I am enabled to perform several steps in the conditioning of air and other gases in an especially simple and expedious manner wherein the cost of the energy required is maintained at a minimum. In general, the invention involves the use in a novel manner of two series of chambers containing air conditioning bodies in which one series of chambers serves to condition air while the conditioning bodies of the other series is being reconditioned to supplant the first series after the effectiveness thereof in conditioning the air has been reduced.

Heretofore, it has been the practice to employ this general method of conditioning air, but the apparatuses have been very large, heavy and inefficient. More particularly, it has been necessary to either actually exchange the positions of the bodies newly activated and those to be activated, or to exchange the stream of air being conditioned with that used to reactivate the bodies of material. The former type of apparatus necessitates a complex construction and a large source of power for bodily moving the greater part or all of the apparatus periodically. The latter type avoids this very considerable disadvantage but exhibits other disadvantages which are common to both types. For example, in both types of conditioner, the condition of the air delivered by the apparatus varies constantly due to the fact the condition of the material over which the air flows is continually changing from one of maximum effectiveness to one of minimum effectiveness. This follows from the fact that the active and inactive bodies of material are interchanged periodically as a group.

According to this invention, I propose to arrange the conditioning material in a plurality of chambers connected to operate consecutively in two banks. Moreover, the two banks are so arranged and controlled that there are always bodies of conditioning material in each one thereof of varying degrees of effectiveness. Thus, in one bank, there are bodies of material of varying degrees of effectiveness in conditioning air. Likewise, there are bodies of material in the other bank in varying stages of reactivation.

Another disadvantage of prior art devices of the general class in which the present invention may be grouped is that in some constructions part of the air being conditioned passes over newly reconditioned material while another part passes only over material which is practically ineffective in conditioning the air. Obviously, the resultant stream of air is only partially conditioned.

According to this invention however, the air or gas being conditioned is passed over all bodies of material capable of conditioning the air in any degree. Hence, the resultant stream of gas delivered by my apparatus is conditioned to the maximum degree possibly limited only by the effectiveness of the material within the conditioning bank. And, of course, all portions of the stream are uniformly conditioned.

A still further undesirable characteristic of prior constructions is that the conditioning bodies are so arranged that it is necessary to employ large fans operating under high pressures in order to circulate the air over and through the conditioning material. According to my invention, the conditioning material is arranged in an especially novel and advantageous manner whereby a very large surface area of the material is exposed to the air stream in a minimum of space and in such a way that the pressure gradient through the material is only a fraction of that common to known constructions.

Another feature of my invention is that the same housing and valve mechanism can be utilized either as a regenerative heater, or as a gas separator or dryer depending upon the type of conditioning material with which the gas treating chambers are charged. Thus, if the chambers are charged with material having a high heat capacity, the apparatus may be employed as a regenerative heater as is advantageously done where hot gases are available which can not be used directly to heat a space or some object. Likewise, if the treating chambers are charged with absorbent material, then the apparatus may be used to separate gases provided one of the gases is not absorbable by that particular material.

And of course one of the particularly advantageous applications of the invention is in air conditioning a room or other enclosure by the conjoint use of one of the apparatuses charged to act as a regenerative heater and another of the apparatuses charged to act as an absorber or dryer. In this event it is possible to condition an enclosure without the expenditure of energy other than that necessary to operate the valve mechanism. However, if the relative humidity of the air to be conditioned is greater than fifty per cent it is desirable to supply some energy in the form of heat in order that the apparatus may operate with the greatest efficiency as will

appear more closely from the detailed description of the invention.

It is accordingly an object of this invention to provide an air conditioner which is chargeable to act as a gas separator or a regenerative heater. Another object of the invention is the use of both a regenerative heater and a gas separator along with certain auxiliary devices connected in such a way as to condition air in a very efficient and inexpensive manner. It is likewise an object of the invention to provide connections and control means between the various parts of the apparatus and the auxiliary devices whereby only so many of the latter may be employed as is necessary to obtain the desired degree of air conditioning with a minimum expenditure of materials and energy.

It is also an object of the invention to provide an air conditioner wherein the only moving parts are the valve mechanisms and the actuating means therefor.

Another object of the invention is the provision of an air conditioner apparatus operating continuously. More particularly, it is an object of the invention to provide an apparatus which supplies a continuous stream of air uniformly conditioned.

A further object of the invention is to construct and position the conditioning material within the apparatus in such a way as to expose a maximum surface area of the material to the gases with a minimum pressure drop between the air inlet and the air outlet.

Another object is to provide a novel arrangement of multiple valves and actuating mechanism therefor so constructed as to actuate all of the valves in a predetermined, time relationship.

Still other objects of the invention will become apparent from the following detailed description of a preferred manner of practicing the invention as illustrated in the accompanying drawings wherein:

Figure 1 is a horizontal sectional view on the line 1—1 of Figure 2 showing one of the conditioner units according to this invention;

Figure 2 is a vertical sectional view along line 2—2 of Figure 1;

Figure 3 is a vertical sectional view along line 3—3 of Fig. 1 showing one of the valve operating assemblies in one operative position;

Figure 4 is a view of one of the valve assemblies with the valves in a second operative position;

Figure 5 is a view of one of the valve assemblies in a third operative position;

Figure 6 is a fragmentary view in perspective of one of the valve operating shafts and associated cams;

Figure 7 is a perspective view of one of the conditioner units showing how the apparatus has been unfolded for purposes of illustration in Figs. 8 and 9.

Figure 8 is a developed view of one of the units unfolded in the manner indicated in Figure 7, and showing the positions of the various valves and the gas circuits under one set of operating conditions;

Figure 9 is a view similar to Figure 8 but showing the positions of the valves and the gas circuits under the next operative set of conditions after that shown in Figure 8;

Figure 10 is a perspective view of one way of arranging the conditioning material of high heat capacity for use in the regenerative heater;

Figure 11 is a fragmentary perspective view of one manner of arranging the absorbent material in the apparatus;

Figure 12 is a fragmentary view of an alternative method of arranging loose absorbent material in the apparatus;

Figure 13 is a fragmentary view of a third way of arranging absorbent material, such as crepe paper, in the apparatus.

Figure 14 is a diagrammatic view showing how a gas separator and a regenerative heater may be connected to an enclosure to condition the same when the relative humidity of the air to be conditioned is not too high;

Figure 15 is a view similar to Fig. 14 but showing how the various valves may be positioned for most efficient operation when the humidity is relatively high.

A preferred form of the invention is shown in Figures 1 and 2 as encased in an octagonal prism housing **20** having an outer heat insulating wall **21** and an inner heat insulating wall **22**. As will be seen in Figure 2, rings **23** and **24** of heat insulating material serve to close the top and bottom ends of walls **21** and **22** and cooperate therewith to form an annular air conditioning chamber.

Within the annular shaped air treating chamber are located eight individual conditioning chambers A, B, C, D, E, F, G and H which are circumferentially spaced from one another by air passages. Each of the air conditioning chambers or cells is similar in construction and manner of operation, and consequently detailed description of one of these chambers will suffice for all.

Referring to chamber A, for example, it will be seen that this chamber consists of an outer wall **25**, an inner wall **26**, and two diverging side walls **27** and **28**. Any desired conditioning material such as nested corrugated sheets **29** may be arranged to extend between the side walls **27** and **28**, and is spaced from the inner and outer walls **26** and **25** as indicated in Figure 1. The particular manner in which this material is arranged in each of the chambers will be described in detail hereinafter.

As will be observed from Figure 1, the conditioning material **29** is spaced from both the outer wall **25** and the inner wall **26** to provide air entrance and exit passageways **30** and **31**. There are a plurality of air passageways which may be placed in communication with passageways **30** and **31**. For instance, each of these passages can be connected with each of the radially extending air passages on either side of section A of the apparatus, the one being formed in the part by wall **27** being designated **32** and the one adjacent wall **28** being designated **33**.

Communication between passages **30** and **31** and radial passages **32** and **33** is controlled by four valves A1, A2, A3, and A4 interconnected in a manner to be described to open and close in a certain order. Valves A1 and A2 are located on wall **27**, while valves A3 and A4 are located on wall **28**. At this point it may be stated that these valves are so operated that air entering a conditioning section from one of the radial passages must pass through conditioning material **29** before it can reach the other radial passage. Moreover, air entering a section from one radial passage cannot flow back into the other end of the same radial passage but must flow into the radial passage on the opposite side of the section.

As will be seen from Figure 2, there is also

an annular passageway in each corner of the annular chamber formed by the insulating walls 21, 22, 23 and 24. These passageways have been designated 34, 35, 36 and 37 for reference purposes and extend completely around the apparatus. Each of the annular passageways has a conduit 34', 35', 36' and 37', respectively, leading to the exterior of the apparatus. As in the case of the radially extending passages, each of the annular passages is in communication optionally with each of the air conditioning chambers. Thus, passageway 34 communicates with the outer air passageway 30 within conditioning chamber A by means of valve A5. Also passageway 35 is in communication with inner passageway 31 through valve A6. Directly beneath valve A6 is another valve A7 controlling the communication between passageways 37 and 31. Likewise, there is a valve A8 between passageways 36 and 30. It will also be understood that air may be lead into or withdrawn from either passageway 30 or 31 of each conditioning chamber through any one of the passageways 34, 35, 36, and 37, since each section of the apparatus is similar to section A in all respects.

From the foregoing it will be evident that two streams of air may be passed through the conditioning chambers at different times in any one of four directions. Thus, air may flow from radial passageway 32 through valve A1 into passage 30, through material 29 into passageway 31, and past valve A4 into radial passage 33. On the other hand, air may flow from passageway 33 through valve A3 into passageway 30, then through material 29 into passageway 31, and into chamber 32 through valve A2. Likewise, an entirely different stream of air may be passed through the conditioning chamber in either direction. For example, the air might flow from passageway 34 through valve A5 into passage 30 and through the material 29 into passage 31 and through valve A7 into passageway 37. In order to pass air in the opposite direction, it would flow from passageway 35 through valve A6 into passage 31, through material 29 into passage 30 and then through valve A8 into passage 36. In other words, gases may pass diagonally through each of the treating chambers A, B, C, D, E, F, G or H from the four opposite corners in both the horizontal and the vertical planes.

It will also be understood that the air might be caused to flow through the conditioning chambers in other manners according to the setting of the various valves.

In order to accomplish the purposes of this invention, it is important that the various valves controlling communication between each of the conditioning chambers and the air passageways communicating therewith be controlled in a very definite manner. The mechanisms which are proposed to accomplish this will now be described.

It will be understood of course that each of the chambers A, B, C, D, E, F, G, and H are identical in construction. Moreover, each of the chambers is provided with identical valve control mechanisms. As will be apparent from Figure 1, this valve mechanism is largely located in the radially extending passageways between the conditioning chambers. All valves are operated by shafts extending radially from the center of the apparatus. Located at the axis of the apparatus is a power shaft 40 driven by means of a motor 41 through speed reducing gears 42. Secured to this shaft is a bevel gear 43 positioned to drive each one of the eight shafts extending radially to the valve mechanisms. Thus, shaft 44 extends to the valve mechanism located between sections A and B. Valves A3, A4, B1, B2, A7, A8, B5 and B6 are all operated from shaft 44. The manner in which A3, B1, A8 and B5 are operated will now be described in detail.

Referring to Figures 3 to 6 wherein valves A3, A8, B1 and B5 are shown as they appear from a view taken on line 3—3 of Figure 1, it will be seen that each of the valves consists of a flat plate adapted, when closed, to lie flat against a wall separating the radial air passages from the conditioning material. For example, A3 is supported by partition 28 and is spring pressed by means of springs 45 and 46 against this partition to close the opening 47 therethrough. Valves A3 and B1 move in a plane parallel to the supporting partitions when opening and closing. Valves A8 and B5 may open in the same manner as valves A3 and B1.

Valves A3 and B1 are actuated by a cam 48 rigidly mounted on shaft 44. This operation is accomplished when the high portion of the cam strikes pins 51 and 52 secured to link members 50 and 49, respectively. Thus, as will be seen from Figure 3, the high portion of cam 48 is positioned beneath pin 51 on link 50 so as to move valve B1 to open position against the action of springs 45 and 46. In Figure 4 it will be seen that cam 48 has revolved 180 degrees to contact pin 52 on link 49 and thus move valve A3 to open position. Meanwhile, and before A3 opened, the springs on valve B1 have urged it to closed position. As will be observed from the drawings, the high surface of the cam 48 is approximately 90 degrees in arcuate extent. Hence, each of the valves is open for one-quarter revolution of shaft 44.

The mechanism for operating valves A8 and B5 is similar to that just described in connection with valves A3 and B1. These valves are operated by means of a second cam 53 attached to shaft 44 and positioned to contact a pin 54 on a motion transmitting member 55 extending vertically in air passageway 33. The upper end of member 55 is connected through a linkage 56 to valve B5, while the lower end is connected through a similar linkage 57 to valve A8. When the high portion of cam 53 contacts pin 54, arm 55 is carried upwardly to move linkage 56 about pivot 58 in such a manner as to open valve B5. At the same time valve A8 is also opened in a similar manner. At this point, attention is called to the fact that valves A8 and B5 are always operated simultaneously to either closed or opened position. On the other hand, valves A3 and B1 are never operated simultaneously, and one always remains closed. Attention is further called to the fact that the high portion of cam 53 is much shorter in arcuate extent than the high portion of cam 48. Also note that valves A8 and B5 are only open when valves A3 and B1 are closed (see Figure 5).

Valves A4, B2, A7 and B6 are operated by a mechanism identical with that just described. However, the cams for operating these valves corresponding to cams 48 and 53, are positioned to operate the valves in a different timed sequence than that just described in connection with valves A3, B1, B5 and A8.

A preferred manner of operating the numerous valves of my apparatus in timed sequence will now be described. In order to permit of a clear understanding of the valves and the order in

which the same operate, the apparatus of Figures 1 and 2 has been illustrated in an exploded development view in Figures 7, 8 and 9. Figure 7 indicates the manner in which the apparatus has been unfolded to bring all valves into a single plane. Thus, it will be noted that the side walls, top and bottom of the apparatus has been unrolled. Then the top portion of the apparatus has been folded upwardly, and the bottom has been folded downwardly. Figure 9 is identical with Figure 8 except that a second position of the valves and the resulting modified gas circuits are there indicated. Note that the shaded rectangles indicate open valves, while the unshaded rectangles indicate closed valves.

Assuming that it is desired to condition a body of air by removing excess moisture therefrom, the apparatus which has just been described may be operated in the following manner. Moist air, as from the atmosphere, is conducted into the annular passageway **34** through the inlet **34'**. This air stream passes along passageway **34** until it comes to open valve A5 in the first drying section A. (At this time attention is called to the fact that no more than one valve is ever open in any one of the annular passages **34**, **35**, **36** and **37**). This moist air then passes through the absorbent material in section A into passageway **31**. The only exit from this chamber is provided through open valve A4, since valves A1, A2 and A3, as well as valves A6, A7 and A8 are closed as shown in Figure 8. The partially dried air which flows out through valve A4 is led into the next conditioning chamber B through the open valve B1. The air is again led through the conditioning material in this chamber and exits therefrom through valve B4 in a still dryer condition. In like manner, the air to be conditioned passes through chambers C and D. However, in chamber D it will be noted that all valves except D1 and D5 are in closed position. Valve D6 is located in the annular passageway **35** in the top of the apparatus. Hence, the air, which by this time has been fully dried, passes along passageway **35** to exit conduit **35'**.

It will be noted that the air to be conditioned has only passed through four of the eight air conditioning chambers. The other four chambers will have been saturated with moisture from previous use in conditioning air, and will be in need of reactivation. To this end, warm air from any convenient source is led into passageway **37** through opening **37'**, and passes therealong until it reaches the open valve E7 in section E. The conditioning material in this section will be substantially saturated with water vapor. The hot air passing through this material and out through the only open valve E3 into the air passageway between sections E and F and drives off a part of the moisture. This hot air containing some moisture from the material in section E then passes through each of the sections F, G and H in the manner indicated by the arrows in Figure 8. Upon reaching section H, the air passes through the material in this chamber, and since all valves except the valve H8 are in closed position, the air passes into passageway **36** and therealong until it reaches outlet conduit **35'**.

It will therefore be seen that while four of the conditioning chambers are being employed to dry air, the remaining four chambers are being reactivated by hot gases for subsequent use in conditioning air. In order that the air may be conditioned in a continuous manner, it is of course desirable to introduce periodically a dry body of absorbent material in the air drying cycle, and to remove saturated absorbent material to the reactivating cycle. This operation is automatically accomplished without actually transferring the absorbent material, as has been customary heretofore, simply by operating the various valves described hereinabove. At the end of a predetermined period of time, as dictated by experience, the cams **43** and **53** on the eight motor-driven shafts similar to shaft **44** are brought into position to change the condition of certain of the valves. This operation is indicated in Figure 9. Referring to this figure, it will be seen that the moist air entering the apparatus no longer enters section A, because valve A5 is now in closed position. The only valve in passageway **34** which is open is valve B5 in section B. Consequently, the moist air now flows through sections B, C, D and E. As will be seen from Figure 8, section E was previously in the activation cycle, but has now been placed in the drying cycle by reason of the operation of the valves. After the air has passed through section E, it passes into passageway **35** through open valve E6 and is conducted from the apparatus to the space to be conditioned. Likewise, the hot air employed to recondition the absorbent material first passes into section F, and from there to sections G and H. From this point the air next passes through section A which has just been saturated with moisture in the drying cycle. From this point the air, which is now substantially saturated with moisture and is therefore no longer effective in reactivating absorbent material, passes into passageway **36** and out into the atmosphere.

The apparatus continues to operate in this same manner, and it will be appreciated that the air to be conditioned is always led through four chambers, and that hot air is always being passed through the remaining four chambers to reactivate the material therein. It will also be observed that a freshly conditioned drying section is always periodically added to the end of the stream of air being conditioned, and also that the wettest and least effective of the drying chambers is periodically added to the end of the reactivating air stream to be reconditioned. Due to this fact, the air being dried always passes through freshly dried absorbent material immediately before passing from the apparatus and is therefore dried to a minimum degree. By the same token, a body of saturated absorbent material is added to the reactivating cycle at the entrance end thereof where the hot air is the warmest and driest and remains in the reactivating air stream for a maximum period of time.

It is of course obvious that the apparatus can be used to condition air in other ways than that of drying it. If it is desired to heat a body of air by means of hot gases which are unsuitable for use in the space to be heated, this same apparatus may be utilized simply by replacing the absorbent material by some material having high heat capacity. For example, aluminum foil may be substituted for the absorbent material in the conditioning chambers of the apparatus. In this event, the air to be conditioned is passed through four sections of the apparatus in the same manner as the moist air in the above described drying operation. At the same time a stream of hot air or other hot gases is passed through the remaining four sections of the apparatus in the manner just described in connection with the reactivating air stream. Under these circumstances, the apparatus functions according to the well known

regenerative principle of heating a cold stream of fluid indirectly from a hot stream of fluid. Referring to Figure 8 (assuming that the conditioning chambers are now filled with material of high heat capacity) it will be seen that the hot air passes through sections E, F, G and H and thereby heats the aluminum foil to a high temperature. After the material in these chambers has been heated for a period of time, the valves are operated to the position shown in Figure 9. Cold air to be conditioned by heating is now passed through sections B, C, D and E. The air will be partially heated by passing through section E, but after the apparatus has been in operation for a period of time, all of the four sections through which the air to be heated passes will have been previously heated by the hot gas stream and will be in condition to heat the cold air stream. Not only is the air conditioned by heating during this operation, but the relative humidity of the air is also reduced by reason of the heating so that the resultant air stream is much warmer and drier than the original cold and moist air stream.

In order that an air conditioning device of the type herein disclosed be compact, efficient in operation, and offer a minimum resistance to the passage of gases therethrough, it is essential that the material selected for the conditioning chambers have certain characteristics and that it be specially arranged in the apparatus. Not only should the material be so arranged as to offer a minimum resistance to the flow of air through the device, but it should also be so arranged as to present a maximum surface area to the air stream. If the material is intended to remove moisture from the air, then it is important to select a material which has the property of absorbing and liberating moisture with very slight changes in temperature. If the conditioning material is intended for use in the regenerative heater, then it is important that the material have a very great heat capacity and good heat conductivity so that the material may absorb a large amount of heat quickly from the air stream and give up the stored heat quickly to a stream of air to be heated. As will appear more fully hereinbelow, I have designed an air conditioning device incorporating all of the foregoing desirable characteristics along with many others which will become apparent from the following detailed description.

I have found that ordinary wood, paper, and other cellulose products are especially efficient materials for use in an air conditioning device. It will of course be understood that this invention is not limited to the use of wood and paper as absorbent materials, but that these materials are employed in the preferred form of the invention due to the ease with which these materials may be placed in the conditioning chambers, the rapidity with which these materials absorb and liberate moisture, the slight temperature difference required to cause the material to act either as an absorbent body or as a moisture liberating body, as well as the cheapness and availability of these materials. If wood or paper of sufficient thickness to have some rigidity is employed, I have found that sheets thereof may be arranged entirely across the conditioning chambers in the direct path of the air stream without unduly hindering the flow of the air through the chamber. In other words, the material has been found to be sufficiently porous to permit the air to filter therethrough in spite of the absence of any preformed perforations in the sheets. However, if desired, the sheets of wood or paper may be perforated to permit a greater quantity of air to pass, although I have found that this is quite unnecessary.

In order to decrease the resistance to the air flow further and to present a greater surface area of the conditioning material to the air stream, I find it advantageous to arrange the sheets of material in zigzag fashion across the air stream. This arrangement not only increases the surface area of the material several times in a given cross sectional area of air duct, but also increases the number of pores through which the air may filter several fold. As is indicated in Figure 1, any desired number of sheets of absorbent material may be nested together in slightly spaced relationship across each of the conditioning chambers, but it is desirable and quite feasible in my apparatus to place only a small number of sheets in each chamber and recycle the apparatus oftener. Any convenient way of supporting the sheets of absorbent material in the chambers may be employed, as for example, wire rods located in the constricted portions or apices of the corrugations. It will be noted from section A of Figure 1 for example, that all of the air entering passageway **30**, for instance, must flow through each of the sheets of absorbent material **29** in order to reach passageway **31**. Due to the tremendous surface area of the absorbent material presented to the air stream, it is only necessary that the air filter slowly through a given section of the material in order that a stream of considerable volume reach passageway **31**. Moreover, all of the air must come in contact with absorbent material, and as a result the moist air is quickly stripped of its moisture.

In order to still further increase the surface area of the sheets of absorbent material, the sheet may be preformed as shown in Figure 11. In addition to the large corrugation **60** corresponding to the corrugations in the sheets of Figure 1, the side walls of the large corrugation **60** are also corrugated with small indentations **61**. Both the large corrugation **60** and the small corrugation **61** are V-shaped. Therefore, regardless of whether the air flows in the direction indicated by the arrows of Figure 11, or in the reverse direction, the air stream entering either the large corrugation **60** or the small corrugation **61** enters at a point of maximum cross sectional area. As the air stream proceeds into the corrugation, the cross sectional area gradually decreases in accordance with the diminishing quantity of air which has not yet filtered through the sheet.

If it is desired to employ the conditioner as a heat regenerator, I have found that a most advantageous way of arranging the material of high heat capacity is in the manner indicated in Figure 10. A particularly desirable material to use for this purpose is aluminum foil. This material is relatively inexpensive and easily worked into any desired form. Moreover, it is not affected by moisture or other materials ordinarily present in air to be conditioned, or in the hot gases available as a source of heat. It also has a very high heat capacity and excellent heat conductivity.

In order to present as large a surface area of this material as possible to the gas stream in a minimum of space, and without providing too much resistance to the flow of the gases, the foil

may be cut in relatively narrow strips 62 and corrugated at an angle to a longitudinal side of the strip in the manner indicated in Figure 10. The corrugated strips are then laid one on top of the other with the corrugations of adjacent strips running at an angle to one another as clearly shown in the drawings. This arrangement results in the spacing of the strips without the use of separate spacers and prevents the nesting of the strips. This mode of assembly is continued to provide units of convenient height, and then the units are inserted crosswise of the conditioning chambers—that is, in a direction transversely of the air stream flowing between passages 30 and 31, for instance. A number of such units may be located across the conditioner chamber parallel to one another as in the case of the sheet absorbent material, if desired, or the strips of foil may be originally cut sufficiently wide to extend from the inner to the outer air passages 30 and 31 of the conditioning chambers. As is true of the absorbent material, the air stream passing through the treating chamber does not flow rapidly, but gradually filters from the inlet passage to the outlet passage in contact with the material of high heat capacity. If the air stream is highly heated, then the foil will also become heated in a very short period of time. After the hot air has passed over the foil for a sufficient period to heat the material to substantially the temperature of the hot gas stream, the hot air stream is directed to another treating chamber to heat that, and a stream of air to be heated is passed in the opposite direction over the aluminum foil and quickly becomes heated from the foil.

Still another method of arranging the absorbent material in the apparatus is illustrated in Figure 12. According to this arrangement, loose absorbent material, such as fuller's earth or silica gel 63, may be supported in a thin layer between two sheets 64 of wire mesh, fabric or other suitable material. The resulting laminated sheet may be corrugated in the manner hereinabove described in connection with Figures 1 and 11. As was the case with these arrangements, it is desirable to provide supports such as rods 65 in the troughs of at least certain of the corrugations in order to support the sheets in a vertical and rigid position. However, use of the rods 65 may be dispensed with in certain cases as where wire mesh 64 is employed provided the two opposing layers of mesh are secured together at intervals by suitable ties not shown.

Still another manner in which the conditioning chambers may be charged with absorbent material is illustrated in Figure 13. According to this form of the invention, the units of absorbent material are formed from layers of crepe paper cut in a zigzag manner as shown. The individual strips of crepe paper are then placed directly on top of one another until a unit of convenient size is obtained. It is important, of course, that the grain or crepe of the paper extend crosswise of the strips in the manner indicated in the drawings. The crepe paper units are placed crosswise of the conditioning chambers in the same manner as sheet 29 in Figure 1, and as many units may be placed parallel to one another as is found desirable. The individual units should not extend too far vertically without some means of supporting the units as otherwise the weight of the paper will cause the lower layers to become packed too tightly to permit the air to filter therethrough readily. So long as the individual sheets do not become packed together too tightly, the air will filter through the units in a very satisfactory manner. If moist air is being passed therethrough, the moisture will be absorbed by the crepe paper provided the temperature of the air is low enough for absorption to take place. However, if the temperature of the air is raised slightly, then the moisture contained in the crepe paper will be liberated into the air, and the paper will become reactivated.

Referring now to Figures 14 and 15 which are diagrammatic representations of the manner in which one absorber and one regenerator of the type described hereinabove may be interconnected with an enclosure to be conditioned and with certain auxiliary devices to condition air in a continuous and highly efficient manner. By reason of the use of the regenerative heater in connection with my absorber, it is entirely practical to condition a room with little or no expenditure of energy other than the small amount required to operate the valve mechanisms of the two conditioners, and the small amount of auxiliary energy desirable under certain conditions to supplement and assist the functioning of the absorber and regenerative heater. If the relative humidity of the air to be conditioned is below forty or fifty per cent, it is unnecessary to use any of the auxiliary devices with the possible exception of a simple means for passing a part of the air through a water spray or other moistening device to cool the air by evaporative cooling. Under these circumstances the absorber and regenerative heater may be connected to a space to be conditioned and to the outside atmosphere in the manner illustrated in Figure 14.

It will be understood that the absorber and regenerative heater are identical in construction except that the conditioning chambers of the absorber are charged with absorbent material, and the regenerator is charged with material of high heat capacity. Both units are constructed as described hereinabove. It is therefore thought sufficient if the discussion of Figures 14 and 15 is restricted to a description of the manner in which the apparatus illustrated operates to condition air when the relative humidity is below a predetermined value, and also when the relative humidity is above this same value.

Referring first to Figure 14, it will be seen that air to be conditioned, as from the room 70, may be led through conduit 71 to regenerator 72. Approximately one-quarter of the air delivered from the regenerator is then by-passed through a suitable moistening device 73, where it is cooled by the evaporation of water thereinto. In view of this fact, it may be desirable to add make-up air to the main air stream to prevent influx of unconditioned air to the room. This may be accomplished by adding the required amount of air by means of the adustable valved inlet 71' leading into conduit 71. Consequently the main room air stream plus the make-up air is conditioned as it passes through the regenerator. As previously stated, a certain portion of the air stream discharged from the regenerator is diverted through the moistening and cooling device 73, of any suitable construction, by means of the dividing partition 74 and valve 75 located in conduit 76. The remaining portion of the air discharged from the regenerator is led through conduit 76 into the absorber 77 wherein the moisture contained in the air is absorbed or separated from

the air by the absorbent material. The resulting cool, dry air is then led back to the room through conduit 78. The body of air passing through the regenerator between conduits 71 and 76 is cooled by means of the portion of the air cooled in cooler 73, since this air is led through conduit 79 to the regenerator. After giving up its heat to the main air stream in the regenerator, this air is discharged to the atmosphere through conduit 80.

The absorber is reconditioned by means of the warm air derived from either room 70 or the atmosphere, or from both sources. The air from the room is led to the absorber through conduit 81, and air from the atmosphere is mixed with this air through conduit 82. The relative proportions of room and atmospheric air may be regulated at will by means of the valve at the junction of conduits 81 and 82. This air passes through the absorber in the manner indicated by the dotted line, and passes back to the atmosphere through conduit 83.

It is of course necessary to provide some means of circulating the various air streams just described through the apparatus and to the space being conditioned. As shown in Figure 14, three fans may be utilized and disposed as indicated, although it will be understood that other arrangements may be employed and the fans may be disposed in other locations to satisfy the requisites of a given situation. As shown, a fan 76' is located in conduit 76 between the regenerator and diversion valve 75. Fan 76' is preferably driven by a reversible motor, not shown, and is so designed as to cause air flow in either direction in conduit 76. Also inserted in the same air stream is a second similar fan 78' which is intended to assist and supplement fan 76' in circulating air from room 70 through the regenerator and absorber, and back to the room. If desired, another reversible fan may be located in conduit 79 or 80 to assist fan 76' in circulating the smaller air stream through cooler 73 and the regenerator. A third fan 83' which need not be of the reversible type, is shown in conduit 83 for circulating reactivating air through the absorber and discharging the same to the atmosphere.

From the foregoing description, it will be seen that the air leaves the room at a temperature of $T_1$, which is too high for human comfort. After the air has passed through the regenerator it will have been cooled to a temperature $T_2$, which is much lower than $T_1$. This cooled air is then led to the absorber where it is dried, and consequently warmed somewhat by the heat of absorption. Therefore, the temperature $T_3$ of the air being returned to the room through conduit 78 is intermediate $T_1$ and $T_2$. Moreover, in addition to the fact that the temperature has been reduced, it will also be appreciated that the air is much drier then it was upon leaving the room. Therefore, by reason of the operation of the apparatus, the temperature, relative humidity, and absolute humidity of the air have been modified without the expenditure of any energy other than that contained in the atmospheric air and that expended to operate the control valves of the apparatus. Moreover, this operation may be carried out continuously without any attention whatsoever and in a very efficient manner.

If the relative humidity of the air in the space to be conditioned, or from any other source, has a relative humidity above approximately forty or fifty percent, it may become desirable to supply auxiliary energy to the apparatus in order to obtain the most effective and efficient results. This may be done by the same apparatus illustrated in Figure 14 provided certain valves in the interconnecting conduits are modified to change the circulation of the various air streams so as to include an auxiliary source of heat. Figure 15 accordingly shows the same apparatus as Figure 14, but with the valves in the new position. Fans 78' and 76' are now reversed by a suitable means, while fan 83' continues to operate in the same direction, and new air circuits are established as indicated by the dotted lines in Figure 15. The air flows in the direction indicated by the arrows. By reason of the operation of the fans, it will be observed that moist air from either room 70 or the atmosphere may be conveyed directly to the absorber 77 through conduits 81 and 82. This air stream passes through the absorber where it is dried and warmed somewhat by the heat of absorption. Valve 84 in conduit 83 is now positioned to direct the warm, dry air through conduit 85 into conduit 76. Valve 86 which was previously adjusted to a vertical position in Figure 14 is now in a horizontal position and directs the warm dry air stream downwardly through conduit 76, past valve 75, which is now closed, into the regenerator. As a result, the warm dry air stream is cooled and led from the regenerator by conduit 71 into an air moistening device 88, in the event additional cooling is desired. It will be understood that moistener 88 may be of any desirable type in which cooling is obtained by the evaporation of a liquid, such as water. The air in conduit 71 is diverted through moistener 88 by means of valve 89, and, after being further cooled and moistened somewhat, is conveyed through conduit 90 back to room 70 in a cooled, moderately moist condition.

In order to obtain cooling of the conditioned air stream in the regenerator, cool atmospheric air may be led into the regenerator through conduit 91 wherein this air stream will be heated somewhat by the heat stored in the aluminum foil through which the conditioned air stream has just passed. This warm atmospheric air stream may then be further heated if desired in the artificial heater 92, after which it is led through conduit 93 to the absorber 77 for the purpose of reactivating the previously saturated absorbent material therein. The hot air stream is caused to flow into the absorber by reason of the new position of valve 94 in conduit 93. After passing through the absorber, the warm air carrying the moisture liberated from the absorbent material is discharged back to the atmosphere through conduit 95.

The supplemental heat added to the air in conduit 79 and heater 92 may be derived from any convenient source. For instance, if hot products of combustion or other waste warm gases are available, these may be passed through heater 92 in heat exchange relation with the air from conduit 79 in any convenient manner. Obviously, heater 92 may be heated in any other known manner, as by employing solid, liquid, or gaseous fuel.

It will therefore be appreciated that I have provided an air conditioning device functioning in accordance with an entirely new and novel principle, and deriving by far the major portion of the energy required from the heat contained in atmospheric air or the air to be conditioned. It has long been known that atmospheric air contained an enormous quantity of energy, and by

the use of the apparatus just described I am enabled to employ this energy advantageously to condition other air. I have also provided auxiliary devices for supplementing and augmenting the energy available from the atmosphere whenever this may be desirable in order to increase the general efficiency and effectiveness of my apparatus.

Furthermore, I have not only provided an air conditioning apparatus incorporating and comprising a novel arrangement of an absorber and a regenerator, but I have also devised both a new absorber and a new regenerator incorporating many novel features not heretofore known or used. And while I have described what I consider a preferred manner of constructing and operating both the individual units and a combination thereof, yet it will be obvious that the various valves and other component elements may be assembled and operated in other manners, each of which has particular advantages in certain applications and under the special conditions then prevailing. It is also obvious that my invention may be practiced by various modifications not herein shown and described without departing from the spiirt of the invention or of the annexed claims.

EDMUND ALTENKIRCH.

PUBLISHED
MAY 18, 1943.
BY A. P. C.

# E. ALTENKIRCH

AIR CONDITIONING

Filed Jan. 6, 1938

Serial No
183,581

6 Sheets-Sheet 1

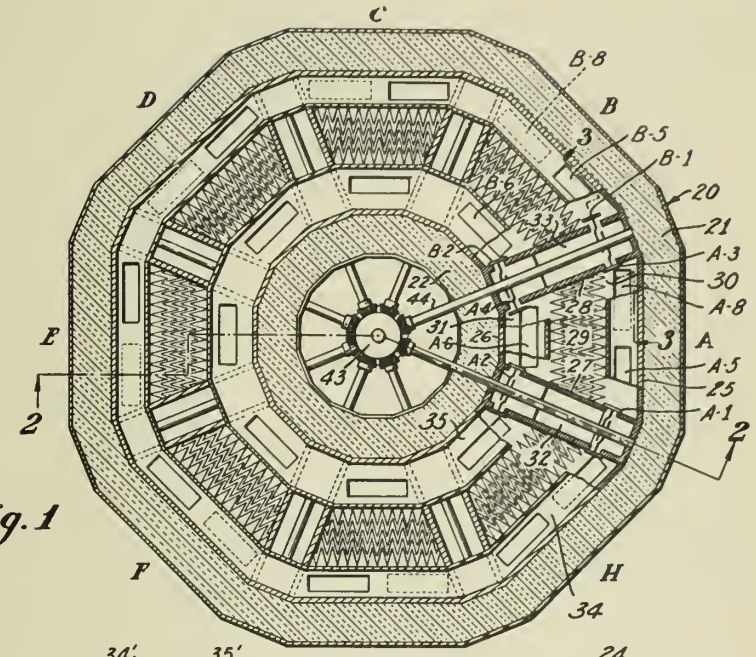


Fig. 1

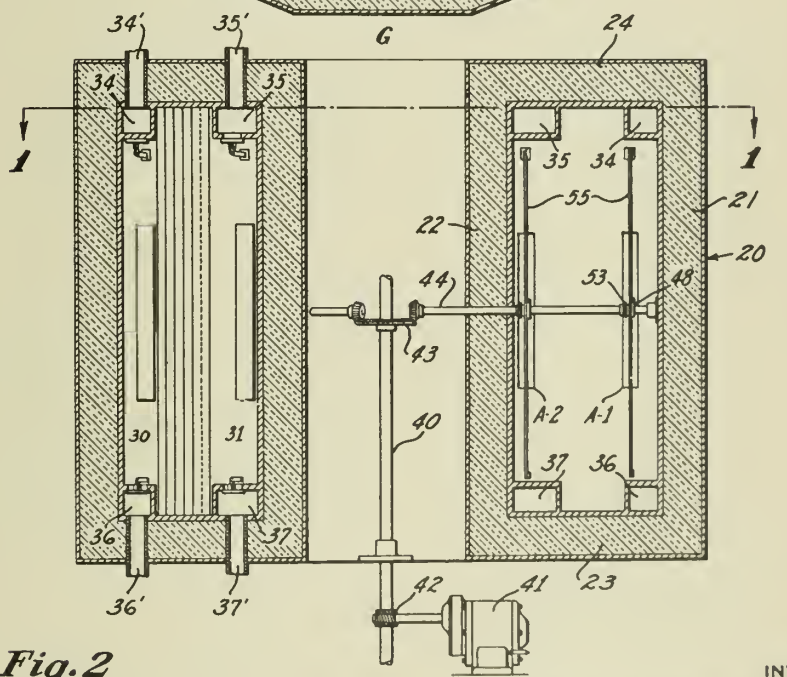


Fig. 2

INVENTOR
*Edmund Altenkirch*

BY *Harry E. Dunham*

ATTORNEY

PUBLISHED
MAY 18, 1943.
BY A. P. C.

E. ALTENKIRCH
AIR CONDITIONING
Filed Jan. 6, 1938

Serial No
183,581
6 Sheets-Sheet 2

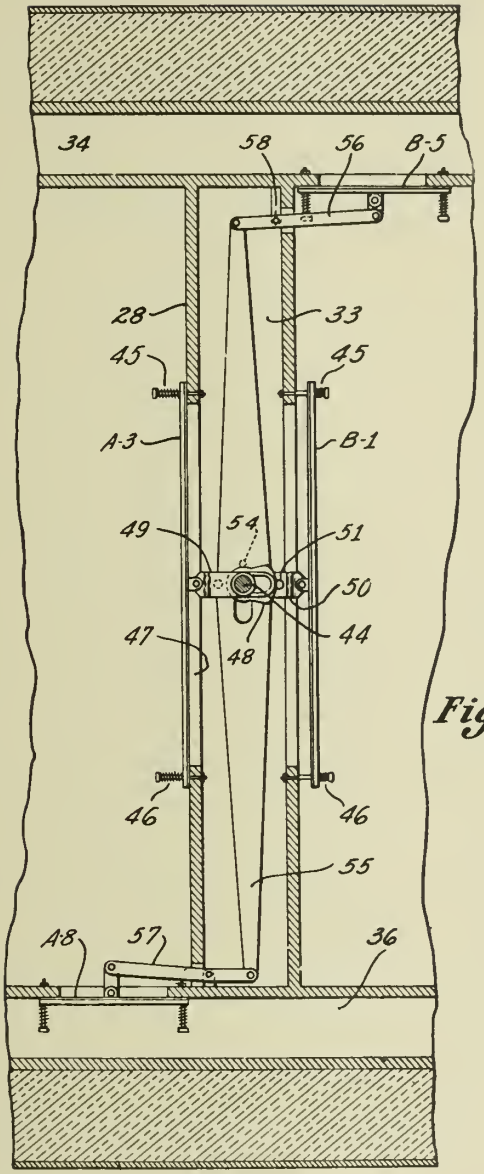


Fig.3

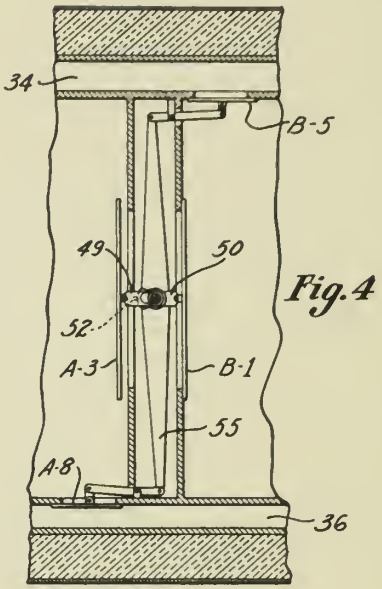


Fig.4

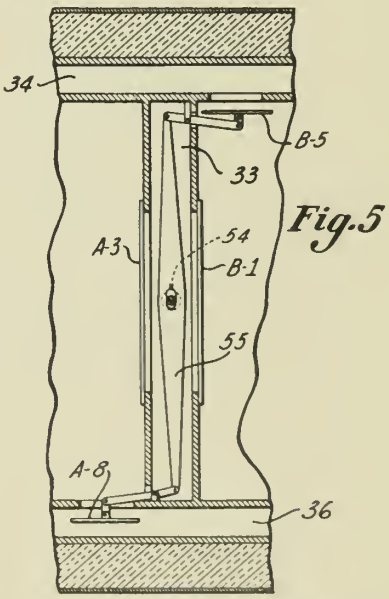


Fig.5

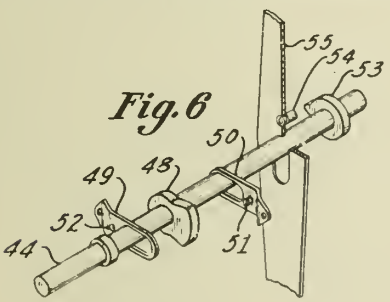


Fig.6

INVENTOR
*Edmund Altenkirch*

BY *Harry S. Edwards*

ATTORNEY

PUBLISHED
MAY 18, 1943.
BY A. P. C.

E. ALTENKIRCH

AIR CONDITIONING

Filed Jan. 6, 1938

Serial No
183,581

6 Sheets-Sheet 4

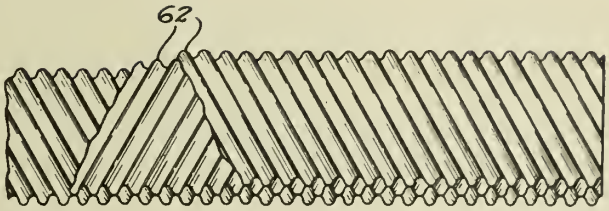


Fig. 10

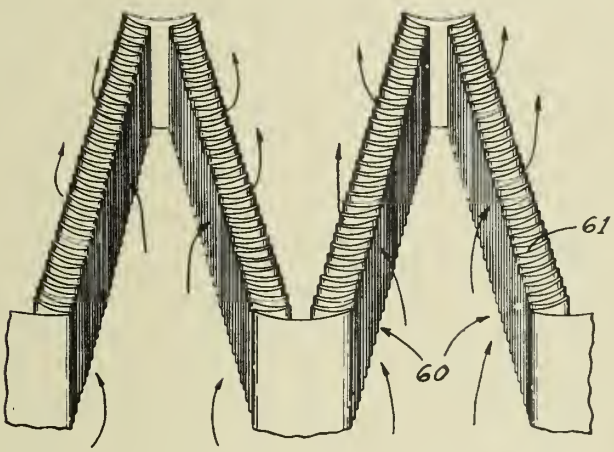


Fig. 11

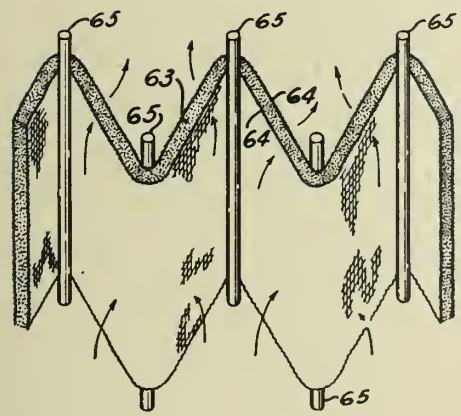


Fig. 12

Fig. 13

INVENTOR
*Edmund Altenkirch*

BY *Harry S. Bruance*
ATTORNEY

PUBLISHED
MAY 18, 1943.
BY A. P. C.

E. ALTENKIRCH
AIR CONDITIONING
Filed Jan. 6, 1938

Serial No
183,581
6 Sheets-Sheet 5

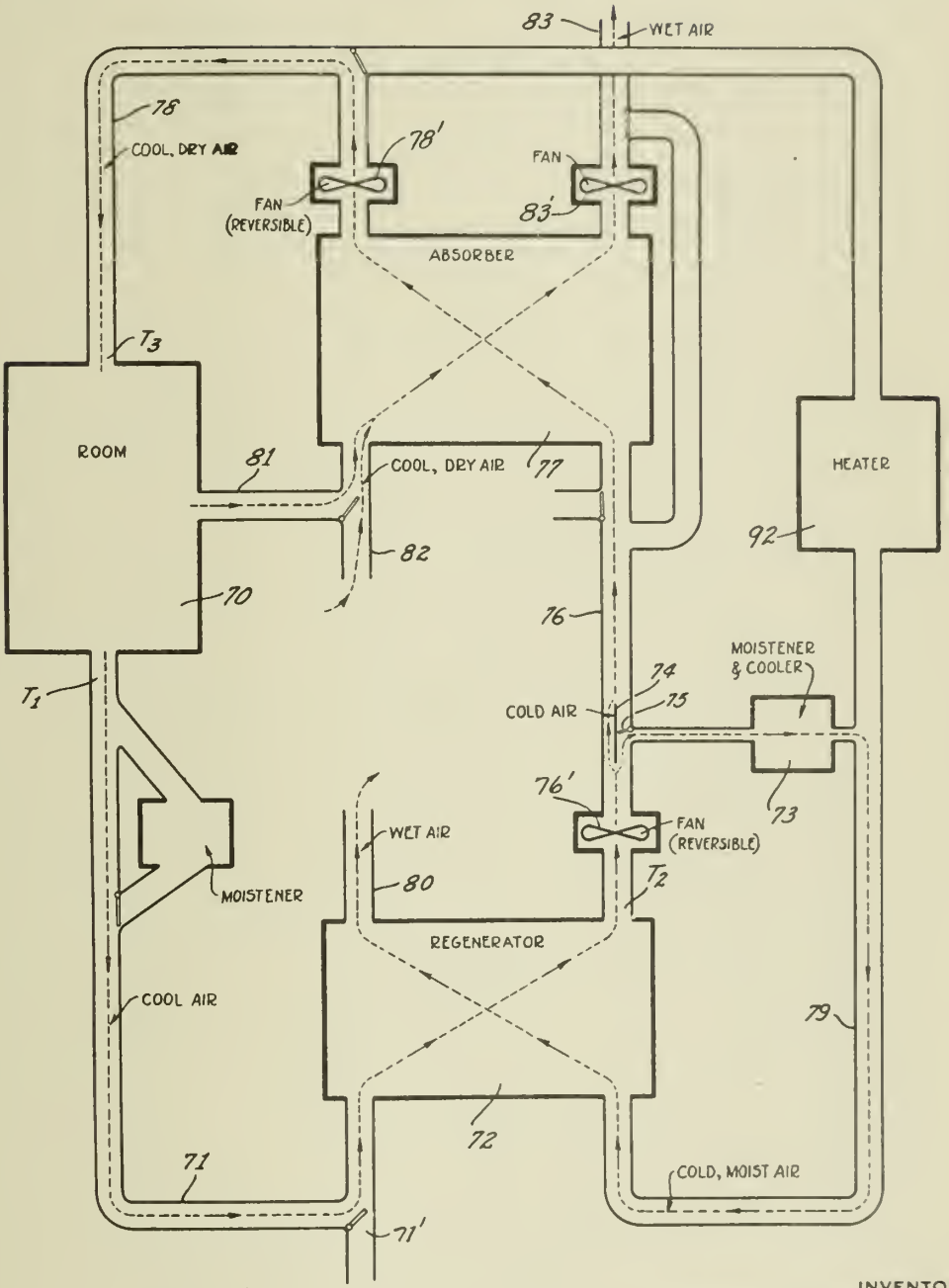


*Fig. 14*

INVENTOR
*Edmund Altenkirch*

BY
*Harry D. Ducaree*
ATTORNEY

PUBLISHED
MAY 18, 1943.
BY A. P. C.

E. ALTENKIRCH
AIR CONDITIONING
Filed Jan. 6, 1938

Serial No
183,581
6 Sheets-Sheet 6

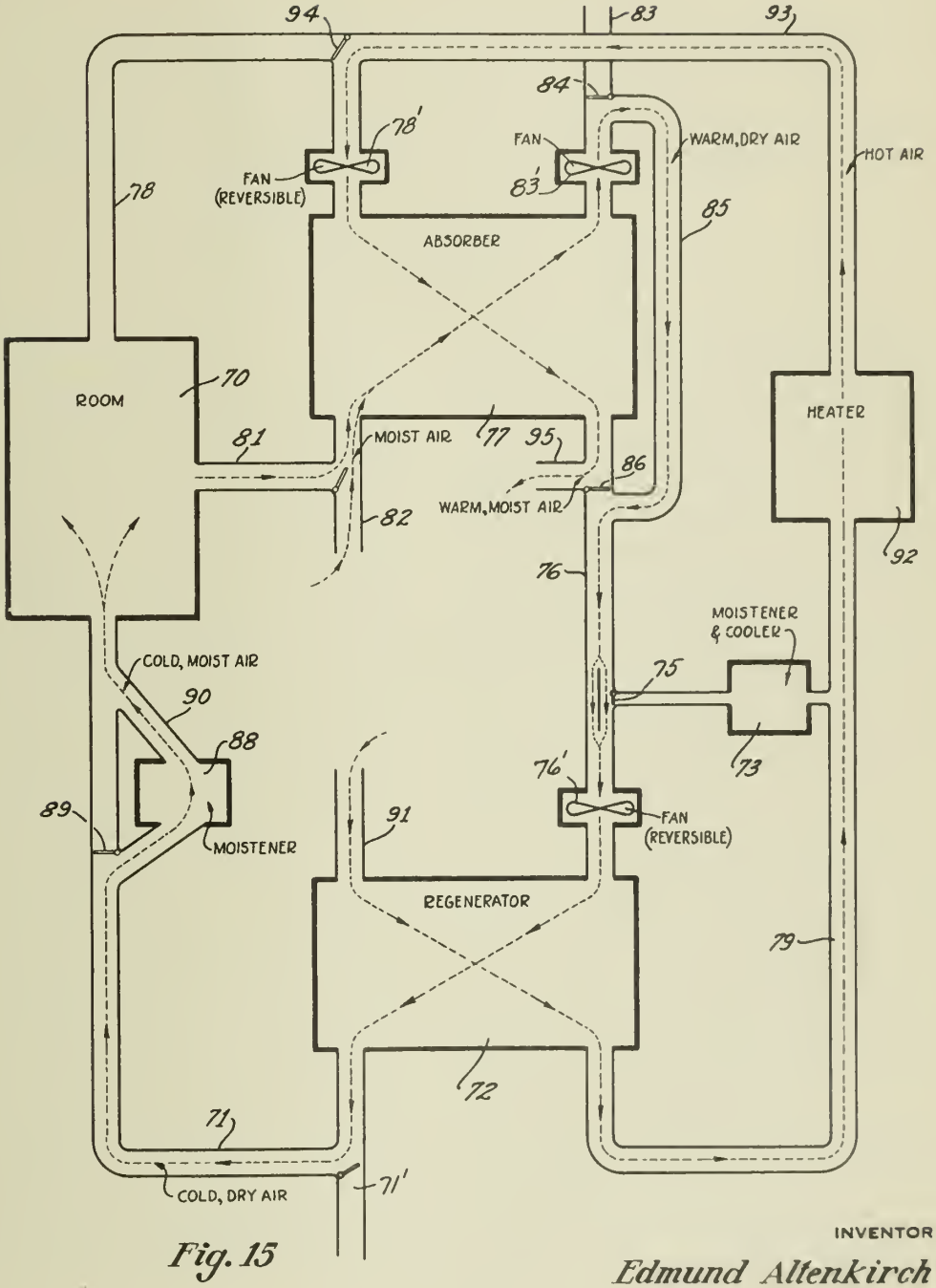


Fig. 15

INVENTOR
Edmund Altenkirch

BY
Harry S. Dwarse

ATTORNEY

Published May 18, 1943

Serial No. 193,918

# ALIEN PROPERTY CUSTODIAN

## ALUMINIUM-SHEATHED CABLES

Hans Schmitt, Toging am Inn, and Ferdinand Hanff, Berlin-Charlottenburg, Germany; vested in the Alien Property Custodian

No Drawing. Application filed March 4, 1938

The present invention relates to aluminum-sheathed cables.

Endeavors have for some time past been made to substitute aluminum for lead which has almost exclusively been employed in the manufacture of metal sheaths. The greatest incentive to use aluminum instead of lead was on the one hand the considerably lower specific weight and on the other hand the considerably higher compressive and tensile strength of aluminum as compared to lead. Consequently, by the use of aluminum the wall thickness of the cable sheath may be reduced and, therefore, the properties of aluminum may be advantageously utilized in a twofold manner. However, the manufacture of aluminum cable sheaths have presented in practice such difficulties which could not be removed despite the advance in the aluminum welding art that it has hitherto been impossible to manufacture aluminum-sheathed cables of considerable length so as to permit in practice a laying of the same as has hitherto been the case with lead-sheathed cables.

The present invention is based on the fact hitherto unknown that these difficulties are substantially due to the greater mechanical strength of aluminum which has hitherto been regarded as desirable. In contradistinction to the usual methods of manufacturing the aluminum sheaths for electric cables, aluminum of as high a degree of purity as possible is employed according to the invention, i. e., aluminum of a degree of purity of 99.9% or more which has a tensile strength of 3–10, but more particularly of less than 7 kg/mm² and an elongation of 30–55%, particularly more than 40%. Aluminum of a degree of purity of 99.95 to 99.998% has proved particularly suitable; in this case, sheet iron heated to a temperature of 350° centigrade has, for instance, a strength of about 5.5 to 6 kg/mm² and an elongation of 40 to 55%.

The essential advantages of the invention consist in the fact that this aluminum whose physical properties are intentionally rendered similar to those of lead is so plastic that it may be molded into a sheath tightly fitting the cable core without the necessity of providing grooves which have hitherto been considered absolutely indispensible, but have complicated both the manufacture and the use of the cable.

In case the sheath is formed by welding ribbons together arranged on the cable core in parallel relation to the axis thereof or spirally wound round the same, a tight welding seam may surprisingly be attained with certainty in the case of radially extending welding edges without destroying the insulation. The welding edges may in many cases be left as they are without interfering with the further use of the cable. However, they may be also bent or folded in such a manner as to lie flush with the surface of the cable sheath.

Apart from the possibility of manufacturing the aluminum sheath with projecting welding edges the sheath may also be made of sheets wound firmly round the cable core and lap or butt welded together, in which case a protective heat insulating or heat dissipating layer may under circumstances be arranged between the aluminum sheet and the cable core. In order to attain the greatest heat effect at the points to be welded by the electric resistance welding it is preferable to provide when using aluminum of a very high degree of purity, said points with an artificially applied oxide coating.

Finally, the invention may be used to advantage also in the case of a seamless pressing of aluminum sheaths, since the pressing operation is thereby considerably facilitated.

FERDINAND HANFF.
HANS SCHMITT.

Published May 18, 1943

Serial No. 196,718

# ALIEN PROPERTY CUSTODIAN

## LIQUID CLUTCH TRANSMISSION

Fritz Nallinger, Stuttgart, and Arthur Berger, Stuttgart-Oberturkheim, Germany; vested in the Alien Property Custodian

Application filed March 18, 1938

The invention relates to an improved method and apparatus for the actuation of liquid clutches. In the driving of blowers or other high speed machines by means of a controllable liquid clutch, a comparatively high torque is transmitted, even with the clutch emptied of liquid or otherwise controlled for idle running, due to the circulation of liquid or air still present therein. Thus, for example, experiments upon an internal combustion engine with a charging blower have shown that, with a driving speed of about 25,000 revolutions per minute, air friction alone in the emptied clutch is capable of entraining the blower runner at approximately 5,000 revolutions per minute. Consequently, apart from the loss of power thereby caused, considerable heat is evolved in the idly running clutch which may lead to trouble.

The invention seeks to obviate these disadvantages and to prevent practically any transmission of power by an idly running liquid clutch. For this purpose, the invention provides for the disconnection of the said clutch either from the drive or from the high speed machine so that when the machine is to be driven, first the liquid clutch is coupled up, preferably, after previous synchronisation of the parts to be coupled, and is then controlled for increase of output, as by filling it with liquid.

According to one suitable arrangement the auxiliary clutch serving for the connection or dis-connection of the liquid clutch is preferably constructed as a claw clutch and is connected to a synchronising device which comes into operation before the engagement of the claw elements.

Another arrangement comprises a planetary gearing under control of a brake for connecting and dis-connecting the liquid clutch. A very simple construction results from the use of such a planetary gearing and high reliability of operation from the gentle engagement achieved therewith. By gradually increasing the braking pressure upon the control member of the planetary gearing, the full connection of the liquid clutch may be delayed as desired so that any shock is avoided. Also the speed of the blower can be temporarily reduced by partial release of the brake without it being necessary to change the filling of the liquid clutch. At the same time, with the planetary gearing, a separate transmission, for example step-up transmission, becomes superfluous.

In order to enable the invention to be readily understood, reference is made to the accompanying drawings illustrating three different arrangements by way of example, in which drawing:

Figure 1 is a longitudinal section of a blower, a liquid clutch and an auxiliary claw clutch.

Figure 2 is a similar view but it shows the auxiliary claw clutch interposed between the blower and the liquid clutch.

Figure 3 is also a similar view but it shows a brake-controlled planetary gear as a form of auxiliary clutch.

Referring to Figure 1, the driving shaft A may be a shaft driven through a step-up transmission from the engine shaft. F indicates the liquid clutch for transmitting the drive to a blower G, and H is an auxiliary clutch between the shaft A and the liquid clutch. The auxiliary clutch H comprises dogs $k_1$ $k_2$ which can be engaged by a clutch lever $h$ but, advantageously, only after a synchronising device has been brought into operation for the purpose of giving the clutch part carrying the dogs $k_1$ the same speed as the clutch part feathered on the shaft A and carrying the dogs $k_2$. In the example illustrated, the synchronising device consists of friction clutch elements $s_1$, $s_2$. As will be seen from the drawing, the friction clutch element $s_1$ is axially slidable against the resistance of a spring on the clutch part which carries the dogs $k_1$ and is fixed on the end of an intermediate shaft $w_1$. The friction element $s_2$ forms an extension of the slidable clutch part carrying the dogs $k_2$. Upon moving the lever $h$ and slidable clutch part to the right in Figure 1, the friction element $s_2$ is engaged with $s_1$ so that the drive of the shaft A is transmitted to the shaft $w_1$ and the latter soon acquires substantially the speed of the shaft A. Only then, and by operating the lever $h$ against the resistance of the spring, is the friction element $s_1$ forced back to permit engagement of the dogs $k_2$, $k_1$.

The shaft $w_1$ has keyed to it the inner part $f_1$ of the liquid clutch F, the outer parts $f_2$ of such clutch being united with a housing which runs in suitable bearings and is united with the blower shaft $w_2$. The liquid clutch illustrated is of the double type comprising two liquid circulations of opposite direction for giving axial balance.

In the arrangement illustrated in Figure 2, the auxiliary clutch is between the liquid clutch and the blower. Thus, the inner part $f_1$ of the liquid clutch is keyed to the shaft $a$, the housing including the parts $f_2$ is united with the intermediate shaft $w_1$, the slidable half of the auxiliary clutch is feathered on the shaft $w_1$, and the other half of the auxiliary clutch is fixed on the blower shaft $w_3$.

Referring again to Figure 1, the liquid clutch F is of the kind which is fully operative when charged with liquid and runs idle when emptied. The liquid charge is supplied to the clutch by a pipe $l_1$ under control of a cock $a$. The pipe $l_1$ is passed through a bore in the shaft A and enters a bore of the shaft $w_1$ through joining means seen thereon. The liquid delivered to the

bore of the shaft $w_1$ passes therefrom through radial passages seen in the drawing, and so into the cavities of the clutch. The flow of liquid is assisted, of course, by centrifugal action within the clutch which action also assists discharge of liquid from the clutch through the restricted port o in the peripheral wall of the clutch. The liquid so discharged returns, by way of a drain pipe $l_2$ on the fixed casing, to the suction of the forcing means supplying the pipe $l_1$. There is thus a constant circulation through the liquid clutch during its operative periods. When the cock $a$ is closed, or when the liquid supply is otherwise cut off, the clutch will empty itself of liquid and run idly.

In Figure 2, the supply pipe $l_1$ passes through a bore of the pipe A and opens into an enlargement of such bore, the radial passages for serving the clutch cavities being seen opening out of that enlargement.

The operation is as follows:

When the clutch F is empty and the auxiliary clutch is disengaged, the blower G is at rest although the driving shaft A may be revolving at a high speed, for example 25,000 revolutions per minute.

In order to drive the blower in Figure 1, the auxiliary clutch H is engaged by swinging the lever $h$ to the left. This immediately brings the friction elements or synchronizers $s_2$, $s_1$ into engagement for the starting and speeding up the shaft $w_1$ until it attains the speed of the shaft A or thereabouts. Since the moment of inertia of the parts to be accelerated is kept as small as possible, rapid and effective synchronisation is possible. It is with this object that the smaller mass of the inner clutch part $f_1$ is keyed to the shaft $w_1$ and not the greater mass of the outer part $f_2$. When the shafts A and $w_1$ have have the same speed, the dogs $k_2$, $k_1$ can be brought into engagement without shock in the manner already described.

With increasing speed of the rotor $f_1$, there arises at the same time an increasing air friction in the empty liquid clutch which, although with considerable slip, entrains the rotor part $f_2$, the shaft $w_2$ and the blower G at idle running speeds (for example 5,000 revolutions per minute). At this time or immediately thereafter, the liquid clutch is refilled with liquid by opening the cock $a$, until the blower works with full output at maximum speed. As a rule, therefore, the idle running of the blower driven by the liquid clutch rotating with maximum slippage is at most a transitory condition of operation, so that the disadvantages of such idle running cannot occur.

In the arrangement in Figure 2, the process of operation is in itself the same, in that firstly the auxiliary clutch H is engaged and thereafter the liquid clutch F is filled. However, the manner of operation differs from that of Figure 1 for in this case the liquid clutch constantly rotates together with the driving shaft A. Nevertheless, the disengagement of the blower G by the auxiliary clutch H has the effect that the liquid clutch F does practically no work, since the parts $w_1$, $k_1$, $s_1$ connected to the rotor part $f_1$ offer practically no resistance to entrainment by the air friction in the liquid clutch. The shaft $w_1$ will therefore run idlly without appreciable slip approximately at the same speed as the driving shaft A.

Upon engagement of the auxiliary clutch H, the stationary blower G will first effect braking of the shaft $w_1$ or of the rotor part $f_1$, so that an increasing air friction and slippage is produced in the empty liquid clutch. Consequently, a partial transmission of power (idle-running output at, for example, 5,000 revolutions per minute) to the blower through the liquid clutch is effected. As a rule, however, the liquid clutch is at this moment or immediately thereafter, refilled with liquid until the blower again works at full load and speed.

The actuation of the auxiliary clutch H and the emptying or control of the liquid clutch F may be effected by separate actuating means (for example $h$ and $a$) at will by the operator or also automatically (in the case of aircraft, for example, in dependence upon the flying altitude). However, the actuating devices may also be coupled together, for example in such fashion that firstly the lever $h$ (for engaging the auxiliary clutch H) and thereafter the cut-off cock $a$ (for filling the liquid clutch F) are adjusted by a common linkage. In view of the fact, however, that the filling of the liquid clutch requires a certain period of time, the two actuating devices ($h$ and $a$) may also be adjusted simultaneously or the cut-off member such as $a$ may even be adjusted before the lever $h$ or other appropriate device so long as the liquid charge is appropriately timed. Upon putting the blower (or other machine) out of operation, preferably the liquid clutch should first be emptied and thereafter the auxiliary clutch disengaged.

In accordance with Figure 3, the driving shaft A drives the clutch part $f_1$ by way of a planetary gearing P and the shaft $w_1$, the blower G being connected with the outer clutch part $f_2$. The planetary gearing P consists of a planet carrier $p_1$ upon which planet wheels $p_2$ are mounted. These mesh on the one hand with the internal ring of teeth in the drum $p_3$ and on the other hand with the sun wheel $p_4$ keyed on the shaft $w_1$. The drum $p_2$ is revolubly mounted but can be braked and held fast by a brake B.

With the blower disconnected, the liquid clutch F is emptied and the brake B is released. The shaft A rotates together with the planet carrier $p_1$ without torque being transmitted to the shaft $w_1$. The sun wheel $p_4$ then remains substantially stationary, the planet wheels $p_2$ rolling upon it and carrying the drum $p_3$ along.

For driving the blower, the brake B is tightened so that the drum $p_3$ is brought to rest more or less rapidly. By this means, the gear wheel $p_4$ and, therewith, the shaft $w_1$ and clutch half $f_1$ are gradually accelerated, this moreover, in accordance with the transmission ratio provided in the planetary gearing, up to an appropriate high speed (preferably higher than the speed of the shaft A). At the same time or immediately thereafter, the filling of the clutch F with liquid is effected by admitting liquid to the pipe $l$ which passes through bores in the shafts A and $w_1$ and opens into an enlargement of the second bore as seen in Figure 3.

Disconnection of the blower is effected fundamentally in the converse order.

The planetary gearing may in some cases be disposed, similarly to the arrangement in Figure 2, between the liquid clutch and the blower. Furthermore, in place of a planetary gearing proper, use may be made of a differential gearing or a correspondingly acting gear arrangement.

FRITZ NALLINGER.
ARTHUR BERGER.

PUBLISHED
MAY 18, 1943.
BY A. P. C.

F. NALLINGER ET AL
LIQUID CLUTCH TRANSMISSION
Filed March 18, 1938

Serial No.
196,718

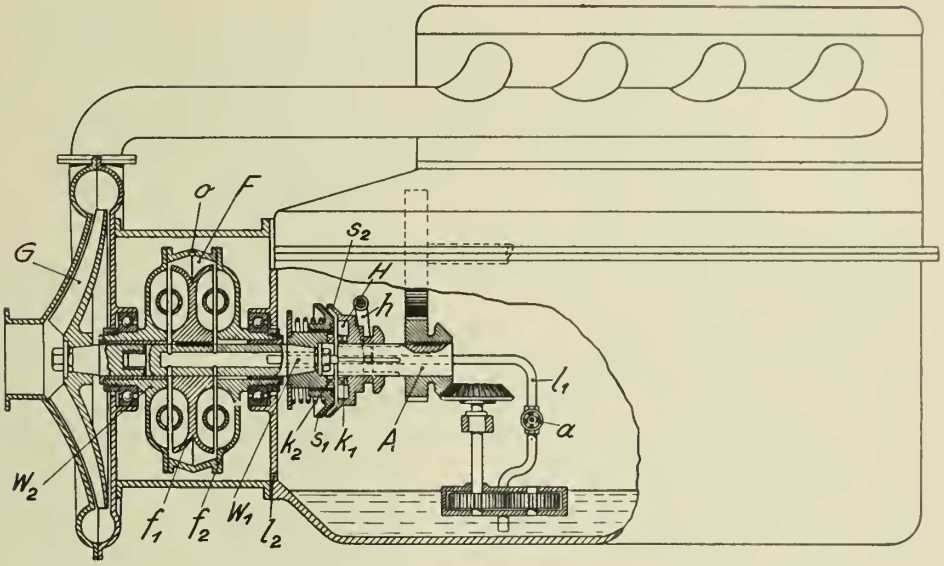


FIG. 1.

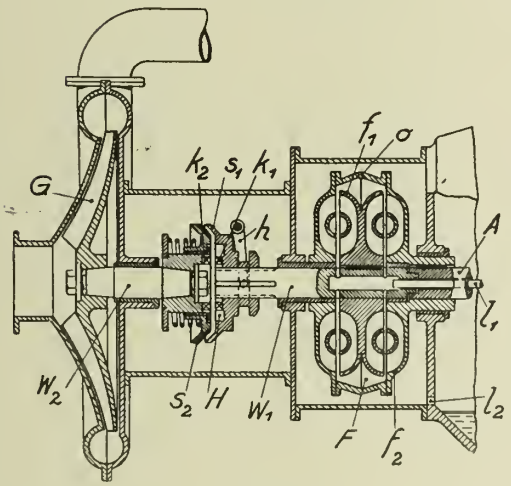


FIG. 2.

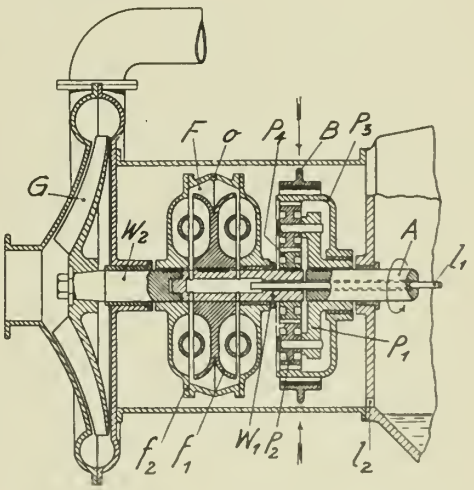


FIG. 3.

INVENTORS
FRITZ NALLINGER
ARTHUR BERGER
BY A. A. Klinke
Clarence A. Rowe Jr.
ATTORNEYS

Published May 18, 1943

Serial No. 198,970

# ALIEN PROPERTY CUSTODIAN

## METHODS OF INTERRUPTING ALTERNATING ELECTRIC CURRENT

Vítězslav Havlíček, Plzen, and Aleš Bláha, Prag XII, Czechoslovakia; vested in the Alien Property Custodian

Application filed March 30, 1938

This invention relates to the interrupting of alternating electric current.

In the hitherto known method of and means for interrupting alternating electric current the procedure adopted has been such that the time elapsing between the moment of initiating the interrupting action and the moment of actual interruption (defined as being the moment when the interrupting arc is extinguished at all poles of the switch) amounts to several periods of the current interrupted. The conditions of interrupting are most difficult in the event of a short-circuit in the line to be interrupted, and it is for interruption under short-circuit conditions that switches are designed and dimensioned. The procedure in interrupting under short-circuit conditions is as follows:

When a certain current strength is exceeded in the circuit controlled by an interrupter a relay associated with the interrupter is operated. This relay trips or releases the interrupter so that its contacts are separated. After a certain length of time the interrupting arc forming at the contacts becomes extinguished. The following periods of time elapse therefore between the moment at which the short-circuit occurs and the extinguishing of the interrupting arc:

(1) The time due to the inertia of the relay, which generally amounts to at least one period;

(2) The time due to the inertia of the releasing device, which generally amounts to 2–3 periods;

(3) The duration of the electric arc, which amounts to at least one period, and more often to 2–3 periods.

Altogether it would thus be possible to interrupt a short-circuited current within about four periods of the current, and usually after 8 to 10 periods. The size of the interrupter is then determined mainly by the arc, and therefore by the duration of the arc. At the moment at which the contacts separate, which is arbitrary in regard to the course of the short-circuit in time, the full short-circuit current (*x*, *y* in Fig. 1*a*) flows through the contacts, and an arc forms between the separating contacts. The greater this current is the more the path becomes ionized, and the more difficult it becomes to extinguish the arc. The longer the arc lasts (in terms of periods) the more injurious is the effect it has on the interrupting device. The interrupter must be so designed that it is capable of withstanding the strain of this entire short-circuit effect.

It has been previously proposed, for the purpose of interrupting alternating electric current, to utilize the fact that at certain moments in a period the current changes its direction and therefore becomes zero for a short space of time. The designing of a mechanical interrupter capable of switching off rapidly at this moment of time has been regarded as not feasible, since on the one hand the synchronization of the contact break with the zero points of the short-circuited current is difficult, while on the other hand for imparting the necessary acceleration to the moving masses of the interrupter great and suddenly initiated forces such as are not in practice attainable would be required, if mechanical separating of the contacts is to be effected in a space of time amounting to some $10^{-6}$ of a second. In spite of this widespread opinion designs for alternating current interrupters have been proposed in which, by means of a special, mechanically and electromagnetically operated, device, e. g. by means of pawls, the separating of the contacts is prevented from taking place at any chance instant, and caused to take place as the current is at zero. These contrivances have not, however, become adopted in practice, since they had great inertia masses and did not in principle satisfy the purposes which they were intended to serve. It has not proved possible hitherto to design an interrupter that would interrupt the current at the moment of passing through zero, by means of this same zero.

The present invention relates to interrupting by means of an ultra-rapid interrupter. This interrupting preferably takes place in a medium under pressure.

Independently of the described opinions and known types of construction, the present invention is based on the following principles:

(1) To interrupt a current within a space of time amounting to some $10^{-6}$ sec. in the vicinity of the point in time at which the current passes through zero it would in fact be necessary to apply forces hitherto unattainable in practice, if the movable contacts are to be adequately accelerated. If it proves possible, however, to interrupt the current in a short space of time of a smaller order of magnitude than the period of the current interrupted, e. g. within a space of time amounting to $10^{-3}$ sec. or less, in the vicinity of the zero of the interrupted current (assuming a current of 50 cycles per second to be interrupted) there flows through the path of the arc a portion of the current *xy* (Fig. 1*b*) which is smaller as regards order of magnitude, than the amplitude of the current to be interrupted, e. g.

of the short-circuited current. Thus for example if it proves possible to interrupt any symmetric short-circuited current within a space of time amounting to $10^{-4}$ sec. before the current traverses zero the momentary value of the current flowing through the contacts at the moment of separating will amount to merely some 3% of the amplitude of this short-circuited current and will then further fall off to zero proportionally with the time. The forces requisite for interrupting within such spaces of time, i. e. from $10^{-3}$ to $10^{-4}$ sec., are in practice attainable, provided special arrangements are used, which will be described in due course. By interrupting within so short a space of time the energy of the short-circuit arc is reduced as regards the order of magnitude, while at the same time the interrupting efficiency of the interrupter is increased as regards its order of magnitude, since the path of the arc only becomes ionized for a short time by a current smaller as regards order of magnitude. In other words, if it were possible to use the present-day interrupters for ultra-rapid interrupting during a fraction of the period it would be possible with these interrupters to obtain an interrupting efficiency which is higher as regards order of magnitude with otherwise unaltered arrangement (e. g. with an extinguishing device for the arc, and the like).

(2) The interrupting of the reduced current only becomes possible provided the whole arrangement of the interrupting device ensures that the total duration of the mechanical circuit-breaking, i. e. the time from the moment of the relay impulse up to the moment at which the movable contacts have traversed the entire interrupting path, only amounts to a fraction of the length of the period of the interrupted current, e. g. $10^{-3}$ sec or less (when the interrupted current has 50 cycles per second). This time is made up of the duration of the releasing operation of the interrupter, i. e. the time from the moment of the relay impulse up to the moment of separation of the contacts, and of the actual time required for the mechanical circuit-breaking operation, i. e. the time from the moment of separating the contacts up to the moment when these contacts have traversed the entire interrupting path. According to the invention the total duration of the mechanical interrupting operation is kept down to within a fraction of the period of the interrupted current, i. e. for example to within $10^{-3}$ sec. or less (assuming a current of 50 c/sec. to be interrupted) by what is hereinafter termed abrupt interruption.

(3) The interrupting of the reduced current is successful even with this abrupt interruption according to (2) provided only that the moment of initiating the current interruption coincides with a moment at which the interrupted current, i. e. for example the short-circuited current, is just about to traverse zero, i. e. provided the interrupting be synchronized with the zeros of the current to be interrupted. When a short-circuited current is to be interrupted the zero value can not be predicted, since the course of a short-circuited current depends on at what moment the short-circuit occurs relatively to the voltage of the main. Thus for example the short-circuit may be symmetrical according to the curve S in Fig. 2, or asymmetrical according to the curve N in Fig. 2, according to whether the short-circuit occurs when the voltage of the main is about at its maximum or when the voltage is near its zero value. If the short-circuit occurs at any other moment the curves of the short-circuit currents lie between S and N. It is thus clear that the zero value of the short-circuit current for instance in the first period may lie quite by chance and unpredictably between the values given by the points $s_1$ and $n_1$, in the next period between $s_2$ and $n_2$, and so forth. It is not possible therefore to prepare in advance the synchronizing of the moment of circuit-interruption with these zeros, and it is necessary for the interrupter itself to find out the zero after the short-circuit has occurred, according to the nature of the resulting short-circuit current. According to the present invention the synchronizing with the unpredictable zero value of the interrupted current, more particularly in the case of short-circuiting, is effected by impact synchronization.

(4) With abrupt interrupting and impact synchronizing, the interrupting of the reduced current still only succeeds provided steps be taken to ensure that the electric arc, formed from the reduced current, becomes extinguished when the current is at its zero value with which the interruption is synchronized. The arc may be extinguished in any of the known ways. A favourable circumstance in this connection is that in the case of discharges of a shorter duration than $10^{-3}$ sec. the arc path can not become sufficiently heated up to fulfill all the conditions of a stabilized electric arc. There arise several kinds of discharges which precede the electric arc and which are easier to extinguish.

(5) It should further be considered that the actual duration of the mechanical circuit-interruption, which amounts to a portion of the total duration of the mechanical circuit-breaking as detailed under (2), depends on the interrupting path to be traversed by the moving contacts. This duration can thus be shortened by reducing the gap and with it the path of interruption, by arranging for the contacts to work permanently in a high vacuum or in a medium under high pressure.

From these principles it follows that by means of an ultra-rapid switch reduces currents may be interrupted in the vicinity of the zero value, provided abrupt interruption, impact synchronization, and any known kind of arc extinguishing be employed simultaneously in a medium under pressure. The operations of abrupt interruption and impact synchronization according to the present invention will now be described in detail.

## I. ABRUPT INTERRUPTION

This term is here used to denote a mode of interruption in which the time elapsing between the moment at which the impulse of the relay is given and the moment at which the contacts complete traversing of the entire gap. In interrupting a 50 c/sec. current this time amounts for instance to $10^{-3}$ sec. or less, i. e. $10^{-1}$ of half one period, or less.

The general mode of interruption is to set the movable contacts in motion at the moment of switching off by the impressing thereon or imparting thereto of some accumulated energy. In known types of interrupter construction the movable contacts are connected for instance with resilient springs. Compression of such spring causes energy to be accumulated therein. On liberation of the spring this stored up energy takes effect as kinetic energy of its mass and of the movable contact connected therewith. In abrupt interrupting in accordance with the condition postulated above the following conditions

have to be taken account of: Assuming the weight of the movable contact and of the masses connected therewith to be for instance 1 kg there will be required, for the purpose of traversing an interrupting gap of 10 cm in the time of $10^{-3}$ sec. a force of $2\times10^4$ kg, an acceleration of $2\times10^5$ m/sec.$^2$, and energy of 2000 kgm, i. e., approximately 20,000 joules. At the end of the path of interruption the movable contact attains a velocity of $2\times10^2$ m/sec. If the weight of the movable contact be reduced to 0.1 kg and the interrupting gap to 1 cm, e. g. by causing the contacts to work in a vacuum or in a medium under high pressure, the interrupting may be effected within $10^{-4}$ sec., i. e. in a time equalling $10^{-2}$ of half a current period of a 50 c/sec current, with the same force of $2\times10^4$ kg, acceleration of $2\times10^6$ m/sec.$^2$, and an energy output of 200 kgm, i. e. approximately 2000 joules. At the end of the interrupting gap the movable contact again attains a velocity of $2\times10^2$ m/sec. From these figures it will be clear that with abrupt interruption, for the moving of the contacts there are employed very considerable energies of the order of magnitude of $10^3$ joules or $10^2$ kgm, in very short times of the order of magnitude of $10^{-3}$ to $10^{-4}$ sec, i. e. shock-like energies. For the utilization of different energies for abrupt interrupting, the following analyses may be carried out:

### A. Accumulated Potential Energy

If any potential energy, e. g. the energy of a gas under pressure, of an electrostatic condenser, or of a chemical explosive be accumulated it is above all requisite that this energy be released in an appropriate manner, i. e. can be converted into dynamic energy, e. g. the energy of a moved piston, of the condenser current, or of the explosive combustion products set in motion, in order that they may be utilized for the movement of the movable contacts. What is herein denoted by the term releasing of accumulated potential is therefore the converting of this energy into dynamic energy. To obtain abrupt interruption it is necessary that this releasing shall last merely for a fraction of a period of the interrupted current, e. g. $10^{-3}$ sec. or less when a current of 50 c/sec. is being interrupted. The abrupt releasing of an accumulated potential energy thus means the converting of this energy into dynamic energy within a space of time amounting to a fraction of the period of the current to be interrupted, e. g. $10^{-3}$ sec. or less in interrupting a current of 50 c/sec.

Since we are concerned with an abrupt interruption which is synchronized with certain moments of the current to be interrupted it must be considered how the energy releasing acts; i. e. how the releasing is initiated, in other words how the accumulated energy is liberated. This liberation generally takes place under the action of a relay. The liberation of an accumulated potential energy is thus denoted as relay action, which initiates the releasing of the energy. In order that an abrupt interruption may be achieved it is necessary that the releasing be effected in a fraction of a period of the interrupted current, e. g. in $10^{-3}$ sec or less in the case of interrupting a current of 50 c/sec. The relay acts with its own energy which is small relatively to the accumulated potential energy, and the liberation consists in principle in initiating the releasing of an energy of a high order of magnitude by the action of an energy of a lower order of magnitude. The term abrupt releasing of an accumulated potential energy is further to be understood to mean the initiation of the releasing of this energy of a higher order of magnitude under the influence of any energy of a lower order of magnitude in a space of time amounting to a fraction of a period of the current to be interrupted, e. g. $10^{-3}$ sec. or less in interrupting a 50 c/sec. current.

The crucial point is the ratio between the released and the releasing energy, and the term releasing factor may be used to denote the ratio between the order of magnitude of the releasing energy and that of the released potential energy when abrupt interruption is effected.

When the accumulated potential energy is liberated and released it is necessary to convert this energy into kinetic energy of the contacts. Thus, for example a compressed spring is mechanically coupled with the contact and the energy thereof, after liberation, is converted on the one hand into kinetic energy of the spring, and on the other hand into kinetic energy of the contacts. This conversion of accumulated potential energy will hereinafter be termed the transmission of this released energy, namely transmission in whole or in part to the movable contacts. To obtain abrup interruption it is necessary that the transmission take but a fraction of the time corresponding to one period of the interrupted current. The term abrupt transmission of accumulated potential energy will therefore be used hereinafter to mean the conversion of this energy into kinetic energy of the contacts within a fraction of one period of the current to be interrupted, e. g. $10^{-3}$ sec. or less in the case of a 50 c/sec. current.

#### (a) *Impact procedure*

Media under pressure

Compressed spring. If a resilient spring (leaf, disc, coil spring, or the like) be so compressed by a force P that its length is shortened by the amount $x$, then there is imparted to this spring an energy denoted by the equation $Wp=0\cdot5P\times x$. Assuming for instance that $P=2\times10^3$ kg. $x=0\cdot10$ m, then $WP=100$ kgm, i. e. approximately 1000 joules. This energy can not however be abruptly released with all springs. The static energy of the resilient forces becomes converted into dynamic energy of the inertia masses of the spring according to a sine function with an angular velocity having a different course with different springs, and which is often relatively small with many types of arrangement, as may be ascertained by calculation. For example a coiled spring of a radius of 0·03 m and a wire diameter of 0·03 m produces, at the moment of liberation, a force of some $2\cdot10^3$. When the spring has ten turns its inherent oscillations amount to some 25 c/sec. and it oscillates at this moment with an angular velocity of some 150 rad/sec to a standstill. Within $10^{-4}$ sec. hardly 2% of the static energy will therefore be converted into dynamic energy, while in $10^{-3}$ sec. the corresponding percentage would be 15%, and the time required for the releasing of the whole of the accumulated energy would be $10^{-2}$ sec. This is therefore not an abrupt releasing of the potential energy, since within a fraction of the period of the interrupted current, i. e. for example within a time amounting to $10^{-3}$ sec. 75 joules and in $10^{-4}$ sec. 10 joules are released (the times $10^{-4}$ sec. and $10^{-3}$ sec. represent fractions of the period of a 50 c/sec current).

These energies are insufficient in conjunction with these times which require energies of the order of magnitude of $10^3$ joules. For the purpose of ultra-rapid interruption by means of a spring it is necessary to use a spring which oscillates rapidly. Examples of such springs are rod and torsion springs. For example torsion springs attain a rate of vibration of the order of magnitude of $5-10\times10^3$ c/sec., with amplitudes of the order of 0·015—0·005 m on a lever arm of 0·05 m. These springs are also at the limit of the abrupt releasing of accumulated potential energy, since the energies which they release are limited and relatively small, and take place in times which can not be reduced below the duration of one-quarter of an oscillation, i. e. taking a maximum oscillation rate of $10\times10^3$ c/sec can not be reduced below $0{\cdot}25\times10^{-4}$. This is a marginal time arrived at without taking account of damping, alteration of the rate of oscillation due to energy transmission, and other factors, as will be dealt with in due course. The ill-success of certain types of interrupter in which the attempt is made to catch the zero value has been due to the fact that insufficient account is taken of these circumstances.

*Compressed gas.*—By the adiabatic expansion of 1 kg of gas occupying some 2 $dm^3$, e. g. of air compressed to 500 $kg/cm^2$ to atmospheric pressure, there can be released an energy of the order of magnitude of $2.10^4$ kgm. A column of such air of a diameter of 1 $dm^2$ and 1 cm high is therefore capable of releasing an energy of the order of magnitude of $10^3$ kgm. When enlarged to merely 5 cm, with retention of the same diameter, it releases an energy of some $0{\cdot}6\times10^3$ kgm. This path, i. e. increasing the height of the cylinder from 1 cm to 5 cm, can be traversed in $10^{-4}$ sec, since the expansion of the gas can proceed at a velocity of several hundred metres per second. The accumulated energy of a compressed gas can therefore be abruptly released, since energies of the order of magnitude of several hundred kgm can be released thereby within a fraction of the period of the current to be interrupted, e. g. in $10^{-4}$ sec, corresponding to $10^{-2}$ of a half period of a 50 c/sec. current.

*Electrostatic energy.*—When a condenser having the capacity C is charged to a voltage E it has an electrostatic energy of $W_s=0{\cdot}5\,CE^2$. Thus for example a condenser having the capacity 5 F and the voltage 20 kv has an energy of $W_s=1000$ joules=100 kgm. If the electrodes of the condenser be suddenly short-circuited the electrostatic energy of the condenser becomes converted into electro-magnetic energy. When the connection takes place through a spark, as is almost always the case, the laws of avalanche action, e. g. avalanche-like ionization, come into force at the connection, provided the sparking takes place in a gaseous medium. In view of this avalanche-like course of the transmission there are obtained releasing times of the order of magnitude of $10^{-6}$ sec and less. The accumulated electrostatic energy of a condenser can thus be abruptly released, since in this case energies of the order of magnitude of several hundred joules can be released in a time of the order of magnitude of $10^{-6}$ sec. which represents a very small fraction of the period of the current to be interrupted, e. g. in the case of a 50 c/sec. current.

*Chemical energy.*—Various explosives release, at explosion, on an average an energy of 1000 cal/g, that is to say 426 kgm, or 4183 joule/g. This energy can be converted into the energy of the products of combustion within $10^{-5}$–$10^{-6}$ sec. This energy may then be converted into dynamic energy in the manner given for compressed gases. The accumulated chemical energy can thus be abruptly released, since in this case energies of the order of magnitude of several hundred joules can be released within a time representing a fraction of the period of the current to be interrupted, e. g. a 50 c/sec. current. A further example of chemical energy which can be abruptly released is e. g. the energy of the elements of electric accumulators and the like.

### (*b*) *Impact release*

Media under pressure

Compressed spring. The force of a resiliently compressed spring may be kept, by the servomotor principle, in equilibrium by compensation with reaction forces the point of application of which can be displaced normally to the action forces of this spring. On displacement of the point of application a frictional resistance has to be overcome and the forces requisite for this purpose are generally smaller, as regards order of magnitude, than the force of the spring. The releasing ratio, i. e. the ratio of the releasing energy to the released energy, is however relatively great, i. e. of the order of magnitude of $10^{-1}$ to $10^{-2}$, and consequently the energy of a compressed spring can only be abruptly released by the employment of inherently great releasing energy. This may represent a hindrance in connection with abrupt interrupting with compressed springs.

Compressed gas. The force of a compressed gas can likewise be kept in equilibrium in accordance with the servomotor principle, and compensated by means of any suitable mechanical device, as in the case of the compressed spring. As compared with springs, the releasing ratio may be very considerably reduced by closing up or confining a compressed gas with a small aperture, and allowing the same to expand in a larger space at the moment of liberation, after opening this aperture. By using a small aperture it becomes possible to reduce the size of the mechanical device by means of which the releasing is effected, and to diminish its weight and the frictional resistances, and thus to obtain small releasing energies. The releasing duration increases however with the expansion of the gas in the working chamber. By proper choice of the size of the aperture it is possible to obtain a suitable abrupt releasing of the compressed gas within a fraction of the period of the current to be interrupted.

*Electrostatic energy.*—Electric charges are maintainable on electrodes separated by dielectrics of various aggregate states, i. e. solid, liquid, and gaseous dielectrics at various pressures and in a vacuum. The dielectrics can be ruptured electrically by means of electrostatic forces, and seeing that the accumulated electrostatic energy is released in the manner of an avalanche an inconsiderable electrostatic releasing energy is sufficient for the liberation. For example: a gaseous dielectric is rendered conductive by a spark when it is traversed by several electrostatic charge units. Thus an energy of the order of magnitude of $10^3$–$10^4$ joules in a gaseous dielectric may be released by an energy of the order of $10^{-4}$ joules. In this case therefore the releasing ratio amounts to $10^{-7}$–$10^{-8}$. An electrostatic energy can therefore easily be abruptly released within a time representing a small frac-

tion of the period of the current to be interrupted, e. g. of a 50 c/sec. current.

*Chemical energy.*—For liberating the chemical energy of an explosive known forms of ignition, e. g. electric, may be employed. The ignition of 1 g of explosive may be effected within $10^{-4}$ to $10^{-5}$ sec. with an energy of $10^{-2}$ joules. An energy of the order of magnitude of $5\times10^{3}$ joules is thereby released. In this case the releasing ratio amounts to some $10^{-5}$–$10^{-6}$. By means of chemical energy an abrupt releasing of energy may thus easily be effected within a time representing a small fraction of the period of the current to be interrupted, e. g. a 50 c/sec. current.

(c) *Impact transmission*

Media under pressure

Compressed spring. A movable contact can best be coupled mechanically with a spring. The mass of the movable contact must be small relatively to the mass of the spring, otherwise a considerable reduction of the duration of the inherent oscillation of the system comprising contact and spring relatively to the spring itself occurs. Seeing that the springs themselves lie at the limit of abrupt interruption great care must be taken to ensure that the alteration of the duration of vibration is small.

Compressed gas. A movable contact may best be coupled with the movement of a gas for instance in such a manner that the gas presses upon a piston with which the contact is connected. Seeing that a gas works practically without inertia for the purpose of the impact release and only has the tendency to expand there is here no bond between the mass of the piston and the mass of the gas, similarly to the conditions in the case of the spring. The quantity of the compressed gas may always be so determined that adequate energy is obtained for the requisite acceleration of the movable contact.

*Electrostatic energy.*—The transmission of electrodynamic energy derived from the discharging of a condenser into mechanico-dynamic energy of the movable contact may be carried out by any flow action. The following actions may be considered for this purpose: pure electrodynamic action, the heat action in a middle conductor, electrolytic action, and the like.

*Electrodynamic action.*—Here there is used to best advantage the action of current on current. The movable contact is connected with an electric current circuit which is made movable, and the condenser is connected with a second electric current circuit. The two current circuits are galvanically interconnected or inductively coupled together. When the condenser current flows through both current circuits repelling forces arise between them, and the movable contact is set in motion. When the capacity of the condenser amounts to $5\times10^{-6}\mu F$ and the inductivity of the current circuit connected in series with the condenser to about $10^{-4}$ H there result maximum current values of the order of several times $10^{3}$ amp. in both current circuits within a space of time substantially smaller than $10^{-4}$ sec. What is here effected is therefore abrupt transmission of energy into the movable contacts.

Thermal action. In this case the thermal action is exerted upon the contents e. g. of a solid conductor. The current flows through a conductor with a suitable coefficient of heat expansion. The movement of a part of the conductor is transmitted to the movement of the movable contact. For instance a rod of one material having a heat expansion of $3\times10^{-5}$ and 100 cm long and of a cross-sectional area of 1 $cm^2$ is capable of increasing 3 cm in length within $10^{-4}$ sec by being heated to 1000° C, provided it is capable of withstanding this temperature. In view of this relatively long time required for the expansion of the rod this manner of transmitting electrostatic energy by converting it into kinetic energy is at the limit of impact transmission.

*Chemical energy.*—The chemical energy of an explosive is expressed in energy of the products of the combustion of such explosive. As regards the transmission of this energy by conversion into kinetic energy the same may therefore be said as has been said concerning the energy of a compressed gas.

B. Accumulated Dynamic Energy

When any dynamic energy, e. g. the energy of a rotating flywheel, of a flowing stream, or the like is accumulated it is above all necessary to transmit this energy, or at least a part thereof, at the appropriate moment, to the movable contact. The term transmission of accumulated dynamic energy therefore means the transmission of the whole or of a part of this dynamic energy to the movable contacts. To obtain abrupt interruption it is necessary that the releasing last only for a fraction of the period of the current to be interrupted, e. g. $10^{-3}$ sec. or less in interrupting a 50 c/sec. current. The relay has at its disposal a supply of inherent energy which however is small relatively to the accumulated dynamic energy, and the releasing consists in principle in bringing about, by means of a smaller energy, the transmission of a greater energy. The term impact release of accumulated dynamic energy is hereinafter used to mean the initiation of the transmission of this energy of a higher order of magnitude, through the action of any energy of a smaller order of magnitude, so as to effect a movement of the contacts, and that in a space of time amounting to a fraction of the period of the current to be interrupted.

*Electrodynamic energy.*—As electric dynamic energy there may be used with advantage the energy of the main to be interrupted, e. g. the short-circuiting energy or a part thereof, in such a manner that this energy at some moment before zero is suddenly converted into kinetic energy of the contacts. If it is a case of utilizing a short-circuit energy this may be effected for example by means of a current circuit according to Fig. 3 in which *a* denotes a main conductor on which the short-circuit is supposed to have occurred. *v* denotes an impacting device which converts the short-circuit energy into kinetic energy acting in the contacts. *r* denotes a synchronizing device with the zero values of the short-circuit current. When *r* switches on the connection *s* a portion of the short-circuit current flows through the device *v*, namely a part proportionate to the admittances $Y_1$ of the device *v* and $Y_2$ of the short-circuit point, including the admittance of the connecting line. If it is a case for example of a 100 kv main and a short-circuit current of 10000 amp. (effective), and if the device *v* were to be switched on by *r* $10^{-4}$ sec. before the zero value of the current is reached there can flow through the device *v* (at

$Y_1=Y_2$) a momentary current of for example $\sqrt{2}\times 0.03\times 0.5\times 10000=210$ amp, which represents an energy of $0.5\times 0.1\times(210)^2=2.2\times 10^3$ joules, if an inductivity of the device amounting to 0.1 in the "L" scale of inductivity. The short-circuit energy may therefore be directly used for abrupt or impact interrupting, since within a fraction of the period of the current to be interrupted, i. e. for instance within $10^{-2}$ of half the period of a 50 c/sec current, i. e. within $10^{-4}$ sec an energy amounting to several times $10^3$ joules can be released thereby.

### C. The Accumulation of Energy

The energy to be used in the described manner may be accumulated prior to the moment of initiating the interrupting operation, e. g. prior to the occurrence of a short-circuit, and may thus be prepared for release at any time when the interrupting operation is initiated, irrespective of whether it is a case of normal interruption or of overload interruption. In this case it is best to accumulate static energy which in many cases may be accumulated with ease, and as stated under (A) above, without loss. An accumulating of dynamic energy prior to the moment of circuit-breaking is however also conceivable, e. g. by means of a flywheel in which only the frictional losses have to be met, and which may be utilised at any desired moment for effecting circuit-breaking.

Conversely, if it is desired to use the short-circuit energy directly for the work of circuit-breaking this may best be done with the aid of dynamic energy as discussed under (B) above. If it is then a case of normal interruption a short-circuit must be artifically brought about in the main, e. g. with the circuit arrangement according to Fig. 3, so that in this case a short-circuit (overload) interruption. Seeing that it is a case of ultra-rapid interruption, in which the short-circuit current lasts e. g. for only one period the main can obviously always be economically developed in such a manner that it admits of such a manner of interruption. The main is then practically short-circuit-proof. The interrupting action then depends on the energy of the main, but this need not be an objection.

If there is any particular reason therefore, the energy may be accumulated either in the form of potential or of dynamic energy only after the short-circuit has occurred. A reason of this nature would be for example the fact that the short-circuit energy should be employed in greater quantity than is given under (B) above. The short-circuit energy is not directly converted into kinetic energy of the contact, as specified for instance under (B), but is accumulated either in the form of potential energy or in the form of dynamic energy, and that right from the moment of short-circuiting onwards (i. e. from the moment A in Fig. 1*a* or 1*b*).

The accumulating of energy in the form of potential energy may be effected by means of a current circuit according to Fig. 4. In this figure *h* denotes the conductor at which the short-circuit is supposed to occur. The short-circuit energy is converted in part, in any known manner, in the device *t* into potential energy, e. g. by means of a transformer. The device *v*, by means of which circuit-breaking is also effected, then has an element which is capable of accumulating the potential short-circuit energy in any known manner. This may be done for instance by means of a condenser. By appropriate choice of the condenser circuit, e. g. by interposing a rectifying device, the result may be achieved that the accumulated energy remains in the condenser, or that the energy is delayed relatively to the course of the short-circuit current, so that the energy is still very considerable when the short-circuit current has already reached its zero value. The device *r* is a synchronizing device and releases the accumulated energy at the appropriate moment. Apart from a condenser other devices may be provided for accumulating the short-circuit energy in the form of potential energy, e. g. a compressed spring, a gas, or other means.

For accumulating short-circuit energy in dynamic form there may be provided in a similar manner other devices in which dynamic energy is accumulated under the action of a short-circuit current, e. g. by setting inertia masses in motion by the electrodynamic action of a short-circuit current, and the like.

## II. IMPACT SYNCHRONIZATION

The synchronizing of the abrupt interruption with the zero value of the short-circuit current is based on positively setting the commencement of the initiating of the abrupt interrupting operation to some one moment prior to the attainment of the zero value of the current to be interrupted, e. g. short-circuit current. This moment occurs a certain length of time prior to the traversing of the zero point of the current to be interrupted, and this length of time is denoted or termed the lead of the abrupt interruption. In Figs. 5*a* and 5*b* this time is denoted by $t_v$. The term impact synchronization is thus used to mean a synchronization having the following features:

(*a*) The time elapsing between the moment of initiating the interruption, e. g. from the moment at which the short-circuit occurs, and the moment of synchronization, i. e. the so-called duration of synchronization, remains the same for one and the same kind of short-circuit current, with a tolerance amounting to at the most a fraction of the period of the current to be interrupted, e. g. $10^{-3}$ sec. or less, when a 50 c/sec. current is to be interrupted. In other words, when the same short-circuits are repeated, which are expressed by congruent short-circuit curves, e. g. symmetrical short-circuits, then the synchronization, with impact synchronization, is always the same with the above-mentioned limit of error. Thus for example, referring to Fig. 5*a*, the section $0-a_1=t_s$ is the duration of synchronization for a symmetrical short-circuit, and with reference to Fig. 5*b* for an asymmetrical short-circuit. $\Delta t_s$ then denotes in both cases the limit of error in the duration of synchronization $t_s$ amounting, as above mentioned, to at the most a fraction of the period of the current to be interrupted.

(*b*) The length of lead is suitably dependent on the nature of the short-circuit current. Thus for example with entirely asymmetrical current the lead is only half what it would be for a symmetrical short-circuit current.

An impact synchronization may be achieved either by suitable arrangement of a current circuit with accumulated potential or dynamic energy, or by the employment of a special device in the form of what will be termed an impact relay. The impact relay consists in principle of the following elements:

(*a*) An element which reacts abruptly to the zero values of the current.

(*b*) An element which reacts abruptly to the occurrence of a short-circuit.

The element which reacts to the zero values of the current is a device in which a part of the current to be interrupted, e. g. of the short-circuit current, is conducted, and in which by the utilization of certain properties and actions of this current, appropriate current or voltage impulses are obtained in the vicinity of zero. These currents are shorter than a fraction of the period of the interrupted current, e. g. $10^{-3}$ sec. or less in interrupting a 50 c/sec. current.

1. The effect of small currents in the vicinity of the zero value are as follows. A part of the current to be interrupted, e. g. of the short-circuit current, is conducted through a current circuit having an impedance varying in dependence on the current, this impedance being particularly markedly variable when the current is small.

Alteration of the saturation of the iron: a current alteration brings about alteration of the flux in some magnetic iron circuit. By means of this alteration of the flux there may be induced in some secondary circuit, in a known manner, a counter-electromotive force. The alteration of the flux also depends on alteration of the permeability of the circuit, and in the case of iron this is a function of the currents. A ferromagnetic material may be selected in a known manner having such alteration of permeability that the induced counter-EMF is jerky or abrupt. That is to say its course is jerky in the vicinity of zero with shorter duration than a fraction of the period of the interrupted current, e. g. $10^{-3}$ sec., or less, in interrupting a 50 c/sec. current.

Resistance alteration by thermo-emission. An electron lamp with thermo-emission only admits of a saturation current. Only a small current can therefore flow therethrough, e. g. a part of the current to be interrupted (for instance short-circuit current), namely a fraction thereof in the vicinity of zero. A lamp of this type may be so selected in a known manner that the current alteration takes place abruptly. These alterations may be used e. g. in a known manner for the production of EMF impulses.

Alteration of the path of discharge in a gaseous or other medium: on rupturing a gaseous or other dielectric rapid current changes take place in the discharge path, and at the electrodes of the discharge path rapid changes of voltage. It is possible in a known manner so to select the electrodes and dielectrics (pressure gas) that the current or voltage change takes place abruptly according to the above definitions.

(2) Current changes due to rectification of a part of the short-circuit current.

By rectifying a part of the interrupted current, e. g. short-circuit current, a pulsating current may be set up. In the vicinity of zero there occur rapid current changes which may be so arranged in a known manner that the changes take place abruptly in accordance with the above definitions.

(3) Dynamic effects of the current to be interrupted or a part thereof on a device adjusted to the zero of the current.

The current acts in a known manner electrodynamically on a device having an equilibrium position positively determined. This adjusted or attuned device may be rotatably or pivotally (oscillably) disposed in a known manner. The positively determined setting may be effected mechanically or electrically (electrodynamically, electromagnetically). Thus for example the current to be interrupted may turn electrodynamically an armature with magnets. The relay then acts in the manner of a synchronized motor with starting winding. Or alternatively the current may rotate an armature electrodynamically, in which armature a current flows in a winding in phase and in a second winding 90° out of phase is induced. The relay then acts in the manner of a single phase induction motor. Another example provides for the deflection, by the current to be interrupted, of a loop consisting of two stretched conductors in a direct current field, after the manner of the loop of a galvanometer or of the vibrator of an oscillograph. In all these cases the adjusted device assumes a certain definite position in which, by the employment of precision contacts, a releasing auxiliary circuit can be interposed. In order that the the switching in take place abruptly, i. e. exactly in the vicinity of zero, in a fraction of the period of the current, it is necessary that this device works practically without inertia relatively to the periodical phenomena of the current to be interrupted.

(*b*) The element which reacts abruptly to the occurrence of a short-circuit. This may be designed on any of the known principles employed for the protection of nets. e. g. a current relay, a voltage relay, a differential, wattmeter, impedance, reactance, resistance or other type of relay. Fundamentally, care must be taken to ensure that the element can react abruptly to the occurrence of a short-circuit within the terms of the above definition. This element must thus be designed on the principle of an ultra-rapid interrupter, i. e. with a minimum of mechanical, magnetic, electromagnetic, or other inertia.

In view of the fact that the element according to (*b*) serves for blocking the element according to (*a*) other separate elements may also be designed in conjunction with the property of the element according to (*a*). Thus for instance an element may be provided which trans- a portion of the short-circuit current into high tension current. By means of the voltage there may then be set in operation a sparking path, a grid, or other devices made up of elements according to (*b*).

An impact relay, particularly as regards the element responding abruptly to current zeros, is properly speaking a contrivance which uses a portion of the interrupted current or energy to release an energy of a higher order of magnitude. A divider of some kind is therefore necessary, which supplies to the relay a suitable portion of the short-circuit energy and in a suitable form. This divider has a further function. Seeing that a high tension current is interrupted it is often advantageous to separate the relay from the main by some device which insulates the current circuits of the relay from the high tension elements. For this purpose a divider is necessary. To obtain impact synchronization it is necessary that the separated short-circuit energy be in phase with the actual short-circuit current, and that in such a manner that the zeros of the separated off energy correspond to the zeros of the short-circuit current with an accuracy corresponding to a fraction of the period of the current to be interrupted, and that independently of the nature of this current, e. g. in the case of a short-circuit current independently of whether the short-circuit current is symmetrical or asymmetrical. This is obtained by means of a so-called impact divider.

The impact divider is a device that may be termed a four-pole device, i. e. into which the current enters through two so-called primary poles, while the voltage or current suitable for the relay is derived from two so-called secondary poles. If it is a case for example of releasing a potential, e. g. electrostatic energy, the characteristic of the relay will be such that it may be used for releasing an electrostatic energy, and in this case it is advantageous if the four-pole unit deliver voltage to the secondary poles. In order that the four-pole unit may act as an impact divider it is necessary that the voltage at the secondary poles of the divider be of such a nature that the zeros of the voltage and the zeros of the current to be interrupted, e. g. of the short-circuit current and that of the symmetrical or asymmetrical short-circuit current, be in one phase with a degree of accuracy amounting to a fraction of the period of the current to be interrupted, e. g. $10^{-3}$ sec. or less in the case of interrupting a 50 c/sec. current. The four-pole unit has the further purpose, as mentioned above, of insulating the current circuit of the relay from the main. An impact divider of this type, which yields voltage, may consist for example of an iron transformer through the primary winding of which the current to be interrupted e. g. the short-circuit current, flows, and of which the secondary winding is connected open or across a considerable resistance. By suitable choice of the inherent and counteracting inductivities in the windings and resistances of the primary and secondary winding the conditions of an impact divider can be fulfilled. Similar dividers are conceivable with capacities and in general with variously arranged impedances. In the case for example of the releasing of chemical energy or any potential energy, e. g. by means of explosives, it will be advantageous to arrange for the four-pole unit to deliver current to the secondary poles. In order that the four-pole unit may act as an impact divider it is necessary that the current at the secondary poles of the divider be of such a nature that the zeros of the separated current and the zeros of the current to be interrupted, e. g. short-current circuit, and that either in the case of a symmetrical and also of an asymmetrical current, be in one phase with a degree of accuracy corresponding to a fraction of the period of the current to be interrupted, as already defined. The four-pole unit also has here the further purpose of insulating the relay from the main. An impact current divider in which the above conditions are fulfilled may also be designed like the impact voltage divider.

It is necessary that the lead of the impact relay be variable according to some suitable characteristic for various currents to be interrupted, e. g. for various short-circuit currents. Thus for instance the lead may be constant for all short-circuit currents or vary in dependence on the amplitude of the short-circuit current or according to the asymmetry of the short-circuit current. These characteristics may easily be obtained by means of various compensations and arrangements in the impact divider according to the rules given above.

## III. IMPACT CONTROLLING OF ENERGIES

According to the analysis of abrupt interruption given in Section 1, various energies correspond to various conditions of current interruption. Some forms of energy, e. g. the energy of a compressed gas, can be released in practically any quantities, while having a low releasing ratio, i. e. requiring a relatively very considerable energy to effect releasing, and energy which is greater than an impact relay economically designed for constant service is capable of supplying. Other forms of energy, e. g. electrostatic energy, have a high releasing ratio and may therefore be very easily released, but in the case of these forms the quantity in which they can be released is in practice limited. This energy may however be sufficient for example to release an energy having a low releasing ratio, e. g. the energy of a compressed gas. The different forms of energy may thus be so arranged in a row that the relay releases an electrostatic energy which is of a higher order of magnitude than the inherent energy of the relay in itself would not be sufficient for abruptly operating an interrupter with heavy contacts, so that this energy is arranged to release a further energy, e. g. that of a compressed gas in its turn of a higher order of magnitude, which latter energy is sufficient for abruptly operating the interrupter within the terms of the above definition. In this manner a relay working with short-circuit energy may release the energy of a condenser which in its turn releases the energy of a compressed gas. Provided the individual steps of liberating, releasing, and consecutive linking up be effected abruptly it becomes also possible to effect abrupt current interruption with this type of energy control. It will be clear that energies may be linked up together in other ways and from other constructive points of view, in series, or otherwise.

In principle it would be possible to use each impact relay directly for effecting abrupt interruption. The current element reacting or responding to the current zeros gives for example current impulses at the zeros which could be directly used for effecting current interruption. In this case the short-circuit energy is directly utilized for doing the work of interruption. The amount of this energy is however relatively small, even in the case of large mains, depends on the lead as described in section (B) and on the output of the main. It is therefore in many cases more advantageous to work with an accumulated energy. The momentary short-circuit energy is then used only by the relay at the moment of circuit-breaking and releases the next step, i. e. the larger, accumulated, energy. For the various reasons given above a plurality of accumulated energies may be linked up in series with each other, and thus be arranged to release each other in turn in the manner of a cascade. With an arrangement of this nature it becomes possible to effect abrupt interruption on the described principle even with interruptors for great outputs and high voltages.

VÍTĚZSLAV HAVLÍČEK.
ALEŠ BLÁHA.

PUBLISHED
MAY 18, 1943.
BY A. P. C.

V. HAVLICEK ET AL
METHOD OF INTERRUPTING ALTERNATING ELECTRIC CURRENT
Filed March 30, 1938

Serial No.
198,970
2 Sheets-Sheet 1

Fig. 1a

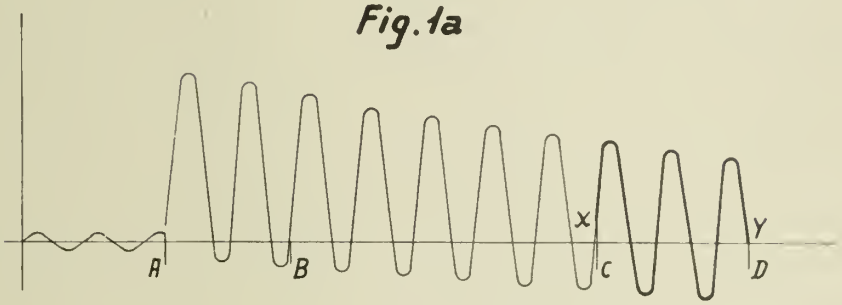


Fig. 1b

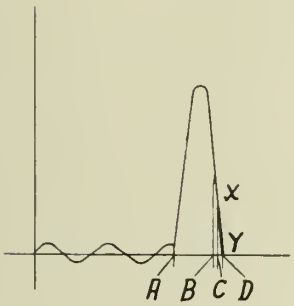


Fig. 3

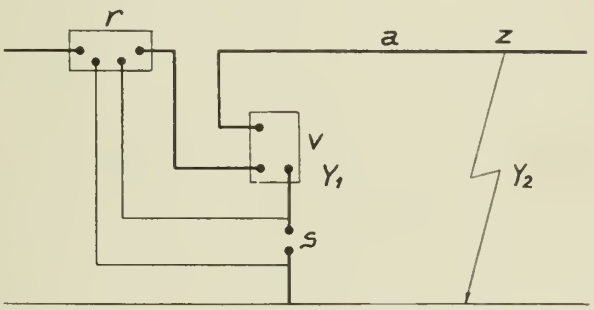


Fig. 4

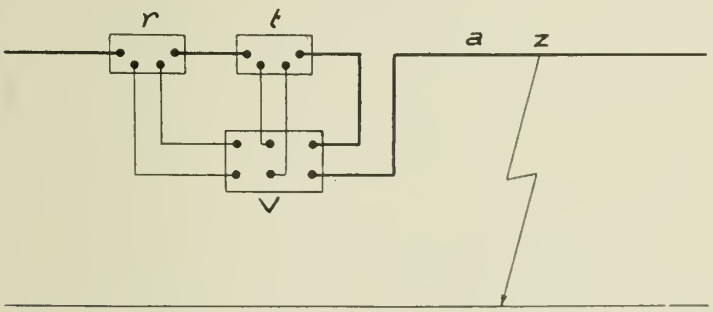


INVENTORS:
VÍTĚZSLAV HAVLIČEK
ALEŠ BLÁHA
BY Haseltine, Lake & Co
ATTORNEYS

PUBLISHED
MAY 18, 1943.
BY A. P. C.

V. HAVLICEK ET AL
METHOD OF INTERRUPTING ALTERNATING ELECTRIC CURRENT
Filed March 30, 1938

Serial No.
198,970
2 Sheets-Sheet 2

Fig.2

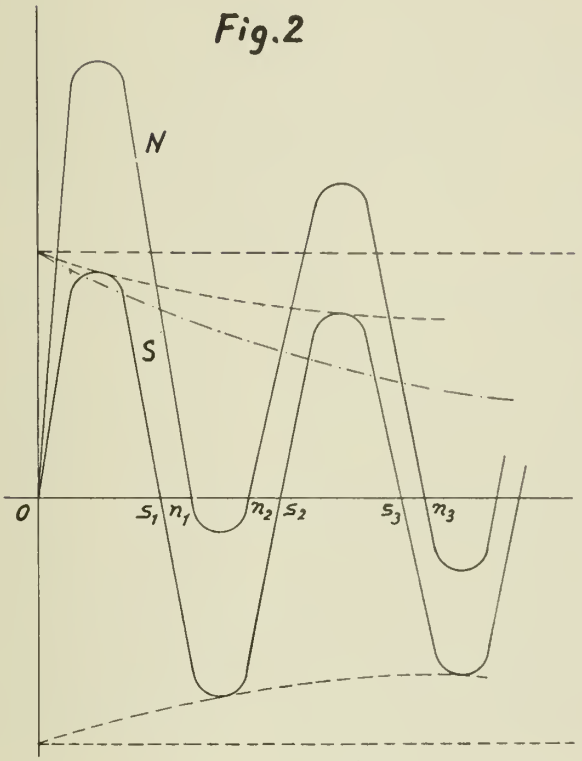


Fig.5a

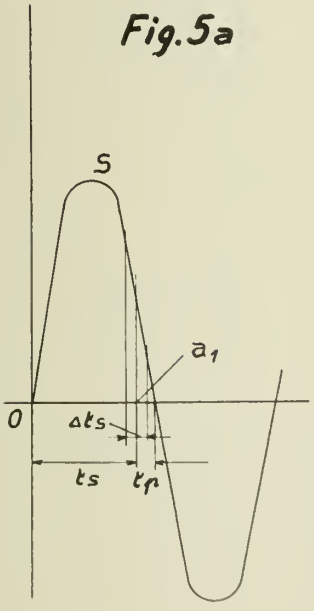


Fig.5b

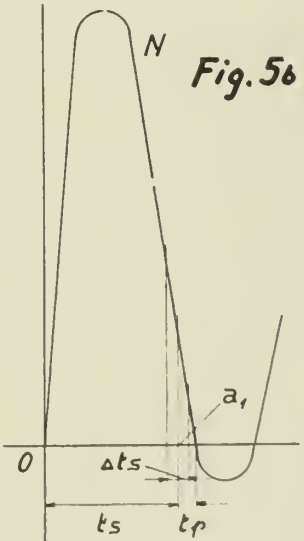


INVENTORS:
VÍTĚZSLAV HAVLIČEK
ALEŠ BLÁHA
BY Haseltine, Lake & Co.
ATTORNEYS

Published May 18, 1943 Serial No. 201,844

# ALIEN PROPERTY CUSTODIAN

## PROCESS OF AND APPARATUS FOR THE ELECTRICAL SEPARATION OF EMULSIONS

Walther Deutsch, Francfort-on-Main, Germany; vested in the Alien Property Custodian

Application filed April 13, 1938

This invention relates to a process of and apparatus for the electrical separation of emulsions, and especially for removing water from oils (such as crude petroleum).

According to the invention, a condenser is interposed in the electric circuit traversing the emulsion under treatment, and the system constituted by the emulsion and series condenser is periodically charged by a source of high tension and afterwards discharged again. The periodical application of the high tension to the system can be effected, for example, by mechanically switching the source of current on and off. The condenser interposed in accordance with the invention and forming adequate protection against flash-overs in the treatment vessel, enables the discharge output, which acts upon the emulsion, to be effectively apportioned, thereby rendering it possible to adapt the working conditions to suit the composition of the emulsion under treatment for the time being.

The invention will hereinafter be more fully described with reference to the accompanying drawings which illustrate diagrammatically and solely by way of example, four circuit arrangements suitable for use in carrying the invention into practical effect and in which:

Fig. 1 shows one embodiment of circuit arrangement;

Fig. 2 shows a second embodiment;

Fig. 3 shows a third embodiment;

Fig. 4 shows a fourth embodiment.

In the embodiment shown in Fig. 1, the reference numeral 1 denotes the earthed vessel containing the emulsion 2, into which latter an electrode 3 dips. A condenser 6 is interposed in the lead in conductor 5 of the electrode 3, said conductor leading to a high-tension rectifier 4, such as a mechanically operated polyphase rectifier. The primary side 7 of the transformer 8 acting on the rectifier 4, is equipped with a motor-driven switch drum 9, which periodically switches on and interrupts the current from the main circuit. When this current is switched on, the system, constituted by the resistance of the emulsion 2 and condenser 6, is charged, the full, rectified secondary voltage being, at first, applied solely to the emulsion 2, and then compensated in the condenser 6.

This compensating effect in the condenser 6, prevents the useless afterflow of charges through the water bridges formed in the emulsion, which flow would not produce any further separation, but only lead to a waste of energy.

After the switch 9 has shut off the line circuit, the system 6, 2 discharges to earth through the rectifier contacts and the transformer winding.

In the circuit arrangement shown in Fig. 2, the periodical switching on and off, on the secondary side of the transformer 8, is effected by means of a rotary commutator 10, which alternately charges and earths the system comprising the condenser 6 and the emulsion 2.

In the arrangement shown in Fig. 3, the system 6, 2 is discharged to earth through a high-ohmic resistance 11.

The application of the high tension current to the emulsion under treatment can also be effected in the manner shown in Fig. 4, by periodically switching, on and off, a previously charged condenser 6. When the commutator 10 is in the position indicated by continuous lines in the Figure, the condenser 6 is charged, and when the commutator is in the position indicated by broken lines, the condenser is in series with the emulsion and is discharged.

In certain cases, the interposition of a separate condenser can be dispensed with entirely, and the condenser can be replaced by arranging for the wall of the vessel containing the emulsion, to serve as the dielectric of a condenser, the outer coating of which is earthed, whilst the inner coating is formed by the emulsion itself.

It is obvious that the invention is not restricted to the circuit arrangements shown. For example, the apportioning condenser 6, which is essential for the invention, can succeed a voltage-impulse apparatus, of known type, with spark gap and condenser. The periodical switching on and interruption of the high tension current can also be effected in other ways than those illustrated.

WALTHER DEUTSCH.

PUBLISHED
MAY 18, 1943.
BY A. P. C.

W. DEUTSCH
PROCESS OF AND APPARATUS FOR THE ELECTRICAL SEPARATION OF EMULSIONS
Filed April 13, 1938

Serial No.
201,844

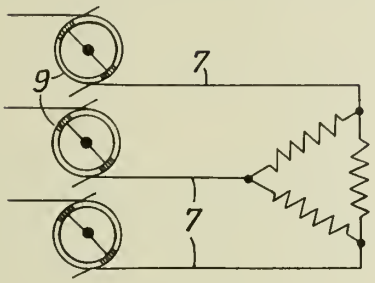


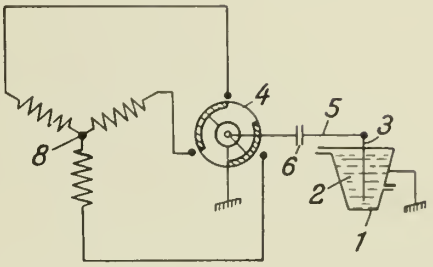


Fig.1

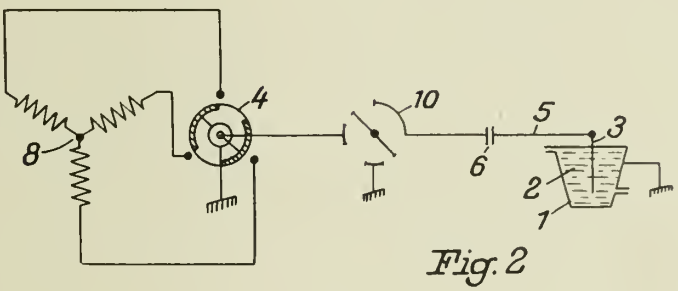


Fig.2

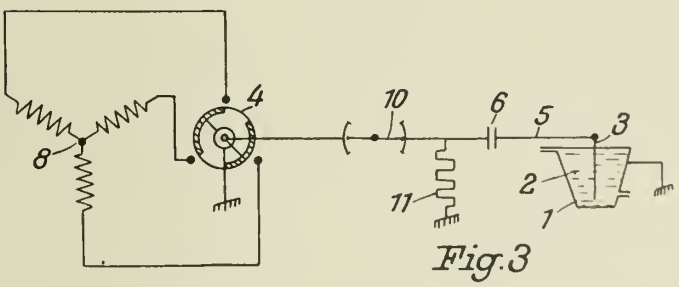


Fig.3

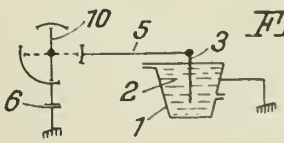


Fig.4

Inventor:
Walther Deutsch,
By Potter, Pierce & Scheffler,
Attorneys.

Published May 18, 1943

Serial No. 206,498

# ALIEN PROPERTY CUSTODIAN

## PLASTIC MATERIAL WRAPPERS

Charles Nicolle, Montrouge, France; vested in the Alien Property Custodian

Application filed May 6, 1938

The object of the present invention is improvements in plastic material wrappers constituted by two layers or two sheets of plastic material both of which or one or the other of which are embossed, which are placed one against the other so as to constitute within the empty spaces provided in the embossed portions cells intended to receive the articles that are to be packed.

It particularly applies to the packing of articles similar to one another, such as compressed tablets, suppositories, powders and the like, and its purpose is, while constituting a multiple wrapping, complete in itself, which is at the same time, hermetical, tamper-proof, damp-proof, dust-proof, proof against microbes and the variations in hygrometrical conditions, to permit the rapid and convenient division and separation by the user, and as he wishes, of said multiple wrapping in portions consisting of one or more units, said result being obtained without the help of scissors, pins or instruments of any sort.

The invention is moreover characterized by means which make it possible:

(A) To ensure that the whole wrapping, as well as each of the individual members constituting it, will be sufficiently rigid and strong notwithstanding the very slight thickness of the plastic material ($\frac{2}{100}$ of a millimetre and over) that will be used.

(B) To detach, as desired by the user, one or more tablets, without having either the cells or the parts stuck to one another damaged and to preserve, for each of said members, considered separately, a strength equal to or comparable with that of the whole wrapping.

(C) To facilitate the opening, by tearing, of each of the wrapping members, so as to obtain the rapid release of the enclosed products as well as the separation of two adjoining members.

(D) To provide the wrapping with printed matter such as advertising, way of using, either on one or on both sides, indifferently on the embossed parts, or between same, or else on the prolongation of the plastic matter out of the cellulosic portion, or on slips of paper gripped between the alveolate sheets, and that will not prevent the user from seeing the content of the wrapping.

For this purpose, the wrappers made according to the invention are characterized by sheets embossed so as to form cells which are:

1. On the one hand grooved, ribbed, or fluted everywhere but in the embossed portions ensuring thus at the same time both the sticking and the rigidity, said fluting or grooving being arranged in a given direction.

2. On the other hand, printed in the desired parts.

3. At last, perforated with small holes either round ones, or shaped ones, as particularly wanted so as to permit the detaching of the members composing the wrapping. When it is merely desired to detach strips of tablets, said holes are positioned in a direction perpendicular to that of the grooving or fluting. On the other hand, when it is desired to detach members of the wrapping containing each a tablet, said holes are arranged both in the direction of the grooving or fluting and in a direction perpendicular to the latter between each of the cells.

In a particular form of embodiment of the invention, at the time of making the holes intended to permit the separation of individual members or of strips of members, special holes, for instance in the form of lozenges or longitudinal slits or similar, which will constitute the starting point for tearing, and the axis of which is preferably in the same direction as the fluting, are provided in alignment with each of the cells; they thus make it possible either to open each member of the packing by tearing or to separate two adjoining members without any effort.

The invention also relates to the machine for filling and sticking the wrappers, preferably as a continuous operation. Said machine is constituted by a plate fitted with two dies having alveolate members positioned one against the other, and in which are disposed the cellulosic tablet to be filled and closed. The plate bearing said elements is itself supported by a carriage moving to and fro under the heating plate of a press, which heating plate is also fitted with a die having alveolated members, corresponding to the dies of the inferior plate, so that the emptying and filling of any one of the inferior dies can be effected whilst the other is exposed to cementing by heat.

This machine, when applied for wrappings intended to be filled with powder, is moreover characterised by two dosimeter distributors of the products to be placed in the alveoli, each placed at one end of the machine so as to incorporate into its method of operation an additional stage of the filling of the packages according to predetermined doses.

In the attached drawings, some wrappers according to the invention, intended to receive

articles of various shapes, have been shown as examples, as well as the machines for sticking and feeding.

Figure 1 shows a series of wrappers for suppositories grouped on a sheet;

Figure 2 is a cross section of Figure 1;

Figures 3 and 4 are respectively a front view and a transverse view of wrappers for compressed products arranged in parallel rows on a sheet or a strip;

Figure 4*a* is a variant of Figure 4;

Figures 5 and 6 are a partial front view and a cross section of an arrangement similar to that of Figures 3 and 4, with the difference that the wrappers are shaped to accommodate ovules;

Figures 7, 8 and 9 show a front view, an elevation view, and a cross section view of a wrapper with members constituting several capsules or compressed tablets;

Figures 10, 11 and 11*a*, show oblong alveoli shaped as bottles.

Figure 12 is a schematical plate showing strips of alveoli and alveoli detachable from one another.

Figure 13 is a view of a wrapping member such as represented in **12**, separated from the others with its starting points for tearing.

Figure 14 is a variant of the wrapping member shown Figure 13, also with its starting points for tearing.

Figure 15 is a strip constituted by a series of packing members and cut off from a sheet such as that shown in Figure 1.

Figure 16 is a view in perspective of the double acting press for filling and sticking the wrappers;

Figure 17 shows the press according to Figure 16 but modified so as to incorporate into its method of operation a stage of filling of the wrappers;

Figure 18 shows a cross section through line A—B of Figure 16 of one of the two dosimeter distributors with which the machine is provided.

The wrappers are formed of two halves, **1** and **2**, identical or not, stuck together by any usual means, a portion which is not stuck being preferably left along the contour line of each individual wrapper so as to facilitate the opening thereof.

In the case of a wrapper for suppositories, (Figures 1 and 2), the flat portion **3** of the half **1** which frames the individual wrappers will for preference be fluted lengthwise (Figure 1) and the notch for initiating the tear is constituted by lines of perforations **4** commencing from the upper edge of the sheet. In this way, once a tear has been commenced along perforations **4** it can continue in a straight line as far as the non stuck edge, the flutings serving as guides.

Figures 3 and 4 show a variant in which the wrappers, shaped to accommodate compressed tablets are arranged in rows along a strip. The wrapping is always constituted by two halves, **5** and **6**, identical or not, half **5** being made, if so desired, of an opaque substance, whereas half **6** is made of a transparent substance for the reasons, indicated. The opaque sheet **5** which forms one of the halves of the wrapper is provided with an extension **5***a* intended to bear printed matter of any sort, mainly instructions regarding the method of employing the contents of the wrapper, in case of a medicine. For reasons of economy the portion **5***a* made of plastic material may also be suppressed and replaced by a paper tab **5***b* (Figure 4*a*) gripped between the two sheets provided with alveoli, and on which the inscriptions will be made. The portions in relief of the wrappers themselves and the intervals can also accommodate printed matter. A peculiarity in the manufacture of said wrappers consists in the fact that the printing on portions **5** and **5***a* is applied while the sheet is still flat, immediately prior to, or simultaneously with, the embossing process. The upper edge of the sheet will be provided with notches **7** serving as a start for tearing and opening.

The arrangement according to Figures 5 and 6 differs from that in Figures 3 and 4 solely by the shape of the wrappers intended to receive ovules or similar bodies. Portion **5***a* can likewise accommodate printed matter on one or both of its surfaces.

When compressed tablets or capsules are positioned flat as in the preceding examples, the packing is comparatively costly on account of the surface of plastic material employed. In order to reduce said cost, the present invention provides for the positioning of the capsules or compressed tablets edgewise and their presentation in a manner somewhat similar to that of tubes made of glass, aluminium or plastics. An arrangement of this sort is shown in Figures 7, 8 and 9 in which alveoli **8** (compressed tablets or capsules) are seen positioned edgewise in relation to supporting surface **9**.

But, in order to provide for the user a convenience which is not supplied by packing in tubes, the semi-cylindrical alveoli are short so as to contain only one, two, three or four compressed tablets or capsules corresponding, for instance, to one day's use. It follows that a sheet of 12 compressed tablets or capsules for instance, such as shown in Figure 9, may be formed of six alveoli each containing two compressed tablets, or of four alveoli of three compressed tablets, etc. These are separated by dotted lines **10**. One alveole can then be detached at a time like a postage stamp, the others remaining intact and untouched. This method offers a great advantage when using products which are highly susceptible to damp. It is a well known fact that the mere opening of a tube, box or flask containing compressed tablets or capsules, the preservation of which is difficult, is sufficient to permit the penetration of a quantity of dampness which may involve the deterioration of the products not used immediately on opening.

Dotted lines **10** provided between the plaquettes constitute then so many starts of tears which will be made easy by following grooves or small ribs as provided in applicant's French patent No. 794,796 of the 21st November 1934.

A form which proves very advantageous in the case of powdered products is the one shown in Figures 10, 11 and 11*a* in which the plastic material wrappers are in the form of flasks or half flasks, the head of which is to be torn off to pour out their contents. Several of said wrappers **12** are preferably held together like those in the preceding forms of embodiment and separated from one another by lines of perforations **13** making it possible to detach them from the block as and when they are required. The head portion **14** of each of the wrappers is arranged so as to be readily torn off at the moment when it is desired to pour the contents out of any of them. The wrappers may assume the form of flasks composed of two identical halves **12** (Fig-

ure 11) or of half non-symmetrical flasks (Figure 11*a*) one portion of which, **12***a*, is flat.

When referring to Figures 13 to 15, it can be seen that the sheets forming the packing are provided with holes **43**, and eventually with holes of a much larger size, and of a triangular shape **44** or an oblong shape **45**, either on the right side of the alveoli, as seen in Figure 13, or on both sides of said alveoli as seen in Figure 14; thus,, it is possible to detach at will whole strips such as **46***a*, **46***b*, **46***c*, shown in Figure 12, or if necessary, to detach one member at one time by tearing along the line of holes **43** in a direction perpendicular to the fluting; then, if holes **47** parallel to the fluting have been further provided, by tearing in the direction of the fluting, following the tearing starting points **44** or **45**.

At last, so as to facilitate the tearing of each packing member proper such as **48**, tearing starting points **49** can be used.

Therefore, it can easily be seen that it is possible, when using the device subject matter of the present invention, to constitute whole sheets such as seen in Figures 1 or 3, or partially Figure 15, and which are fluted when embossing the alveoli and when sticking sheet on sheet **2**, and to constitute, with the help of holes **43**, strips such as **46**, that the user may put in his pocket or that may be arranged in long and narrow boxes.

It can also well be seen that, owing to tearing starting points **45**, it is easy to detach from strips **46** one or several members and take away exactly the number of compressed tablets wanted, arranged in the alveoli.

Figure 16 is a view in perspective of a double action wrapping press making it possible to fill, stick and otherwise handle wrappers as a continuous process without any loss of time.

On a cast-iron bed **18** is guided a carriage **19** which moves between two guide strips **20** and **21** and which is provided with an operating handle **22**. On this carriage are mounted two plates **23**, **24** designed to receive wrappers such as those in Figures 1, 3 or 5. Said plates are fixed to the carriage by plain studs so as to be readily removable and replaceable by others designed for wrappers of different shape. The bed is provided, at the rear, with a swan-neck **25** terminating in a head in which are guided rods **26** supporting press-plate **27** which moves vertically. The lowering of the plate is controlled by a lever **28** terminating in a gradual pressure cam **29**. The lifting of plate **27** is assisted by the action of return springs **30**. Plate **27** constitutes a hot plate the heating of which is obtained by electric resistances, the current lead is shown at **31**.

The method of operation of said press is as follows:

In Figure 16, plate **24**, having previously been filled, has been introduced below hot plate **27** which is shown in its raised position. When plate **27** is lowered by means of lever **28**, sticking under heat commences. Advantage is taken of the time necessary for this operation to fill plate **23**, which is at present positioned on the right, with new wrappers ready for sticking. When sticking at **24** is finished, lever **28** is raised and, by means of handle **22**, carriage **19** is pushed towards the left to introduce the other plate **23** under the hot plate, after which lever **28** is again depressed. Plate **24** has then been driven out completely to the left of the bed. Advantage is again taken of the time necessary for the sticking of the wrappers at present on plate **23** to clear plate **24** and replenish it with new wrappers. After the wrappers which are under the press at this moment have been stuck, carriage **19** is returned to the position shown in Figure 16 and plate **23** is cleared, while plate **24**, which has just been replenished and introduced under the press is in position for the next cementing operation.

Figure 17 reproduces the press shown in Figure 16, but modified so as to constitute, at one and the same time, a machine for filling the wrappers and for measuring the quantity of powdered or granular product to be inserted into each of them. For this purpose, bed **18** of the machine and carriage **19** are made longer and the operating handle of the carriage is positioned on the side of the machine at point **22***a*. In addition to the two alveolar plates **23** and **24**, carriage **19** also bears a third plate, **35**, identical with the other two. In proximity to either end of the bed-plate are fixed four uprights **36** made of flat bar iron for instance serving as supports for the two dosimeter distributors the machine is provided with. Each of said dosimeter distributors is constituted by a tray **37** the bottom of which is perforated with a number of holes **38** equal to the number of the alveoles in plates **23**, **24** and **35** and similarly arranged. The capacity of the hollow of tray **37** and of its holes **38** corresponds to the volume of powder which is to be distributed amongst the wrappers, with a definite quantity for each of them. Beneath tray **37** is supported and guided a distributor drawer **39** perforated with holes **40** identical in number and position with holes **38** in tray **37**; a side handle **41** serves for the manipulation of the drawer. The dosimeter distributor thus constituted is supported on uprights **36** and, for this purpose, it bears studs **42** on its sides which seat within vertical notches **43** rounded at the bottom in supports **36**. It will be readily understood that if the dosimeter distributor is charged and one of the plates of the machine positioned beneath one of the two distributors, it is sufficient to move drawer **39** until holes **40** and **38** register and that at that moment each of the wrappers positioned on the plate will receive the dose of powder assigned to it.

The operation of the machine is similar to that described with reference to Figure 16 with this additional peculiarity that a supplementary filling stage combined with measuring is incorporated into the operation this being obtained by a mere reciprocating movement of carriage **19** to bring plates **23**, **24** or **25** under one of the distributors.

It will be seen from the foregoing that the two machines in Figures 16 and 17 work continuously, the operations succeeding one another without any loss of time. On the other hand the machines are very simple in construction and include no parts liable to get out of order.

The machine can be used just as easily for the distribution of compressed tablets, pills or any other solid products.

These are strewn in bulk on the distributor, the filling holes of which correspond to the shape of the product to be packed. By sweeping them with the hand or by any other means over the surface of the distributor, a certain number of them will drop into the holes of said distributor which is thus charged. It is sufficient to move the drawer and the compressed tablets or other articles drop and lodge in the wrapping plaquette positioned underneath.

In case two compressed tablets should happen to be placed exactly above one another, and to avoid their both falling together, the surface of

the distributor is swept and this can be done automatically by coupling the brush to the carriage for instance.

The brush is constituted by a small rod made of a suitable substance, metal, rubber or any other moving with light friction on the distributor.

When the intervals between the charging holes are of lesser size than the diameter, in the case of circular compressed tablets, or than the width of the article in the case of special shapes, the cross pieces which form the solid portions between the holes of the drawer are reduced to correspond only to the size of said intervals, and the drawer is provided with a stop so that, in the closed position, the cross pieces may register with the centre of the charging holes.

In this position they close the charging holes sufficiently for the compressed tablets or other articles to be retained. When the drawer is in the open position, the cross pieces disappear completely under the intervals of the charging holes and the compressed tablets or other articles are released.

In a different embodiment the drawer is diagonally displaced.

CHARLES NICOLLE.

PUBLISHED
MAY 18, 1943.
BY A. P. C.

C. NICOLLE

PLASTIC MATERIAL WRAPPERS

Filed May 6, 1938

Serial No.
206,498

3 Sheets-Sheet 1

FIG. 1

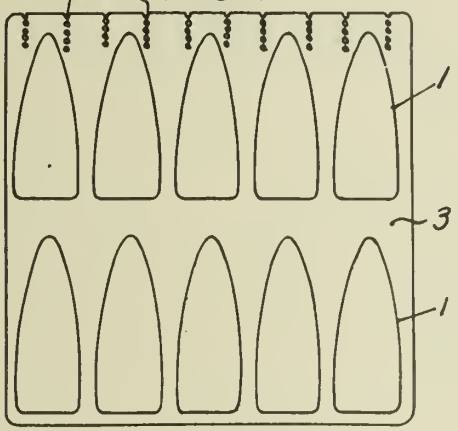


FIG. 2

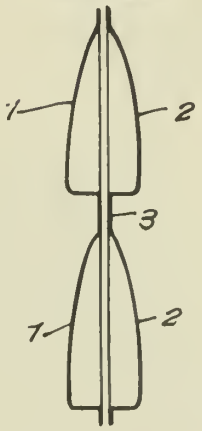


FIG. 3

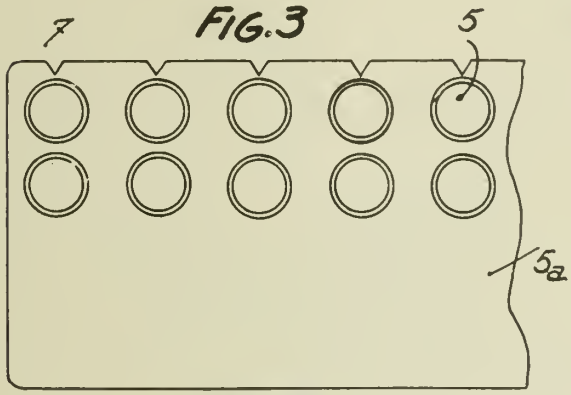


FIG. 4

FIG. 4a

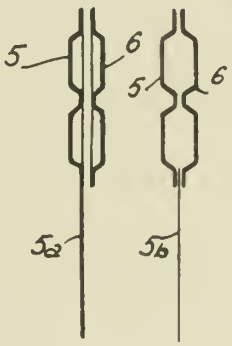


FIG. 8

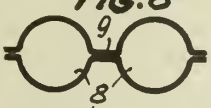


FIG. 7

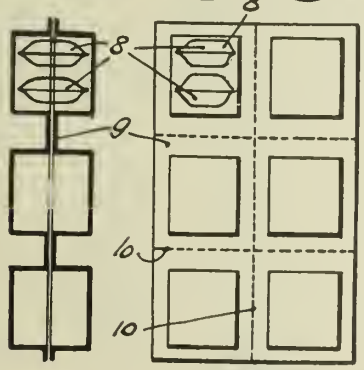


FIG. 9

FIG. 5

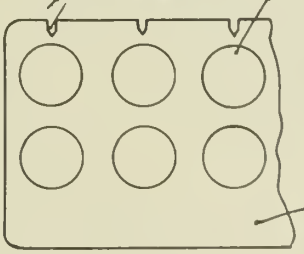


FIG. 6

Inventor
Charles Nicolle

By
Watson, Cole, Grindle & Watson

Attys

PUBLISHED
MAY 18, 1943.
BY A. P. C.

C. NICOLLE
PLASTIC MATERIAL WRAPPERS
Filed May 6, 1938

Serial No.
206,498
3 Sheets-Sheet 2

FIG. 18

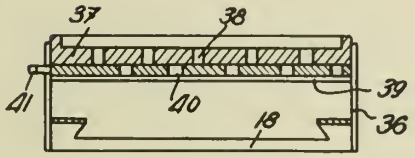


FIG. 16

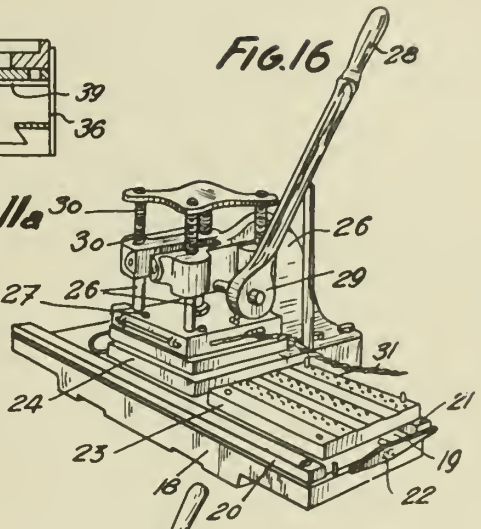


FIG. 11

FIG. 11a

FIG. 17

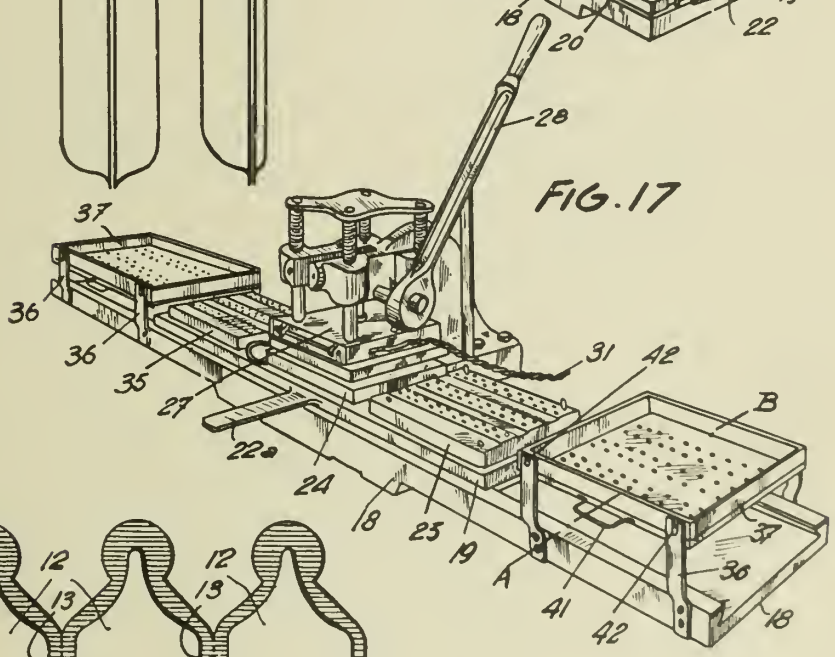


FIG. 10

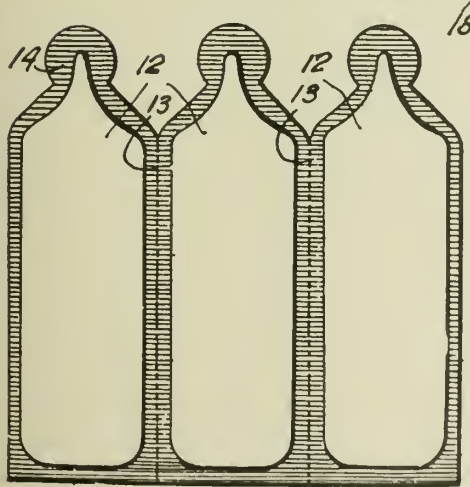


Inventor
Charles Nicolle
By Watson, Cole, Grindle & Watson
Att'ys

PUBLISHED
MAY 18, 1943.
BY A. P. C.

C. NICOLLE
PLASTIC MATERIAL WRAPPERS
Filed May 6, 1938

Serial No.
206,498
3 Sheets-Sheet 3

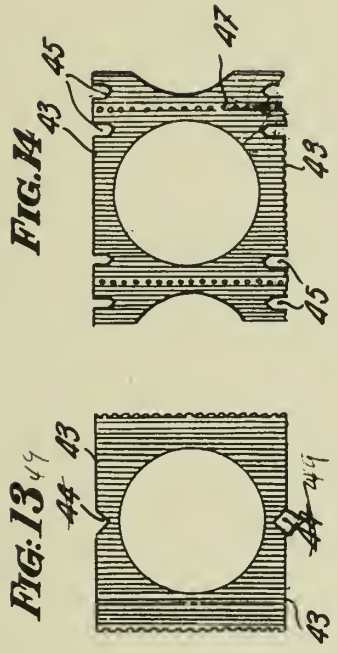


FIG. 14




FIG. 13

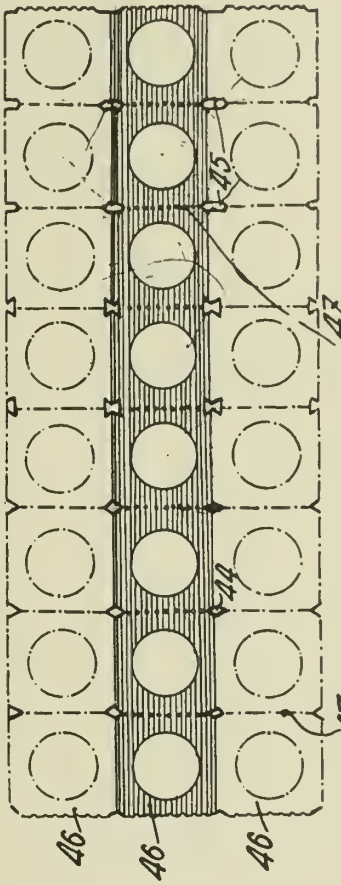


FIG. 15

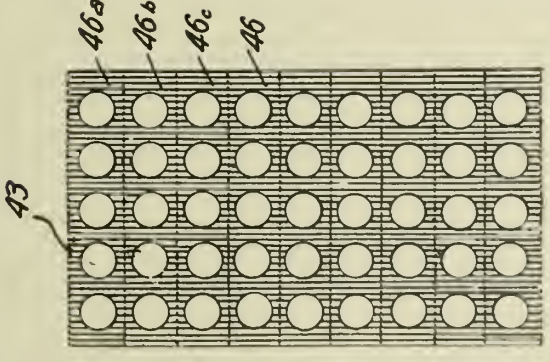


FIG. 12

Inventor
Charles Nicolle
By Watson, Cole, Grindle & Watson
Attys

Published May 18, 1943 Serial No. 206,693

# ALIEN PROPERTY CUSTODIAN

## DEVICE FOR SIGNALING THE INSTANT WHEN TWO SYSTEMS OF THREE-PHASE ELECTRIC CURRENTS ARE IN SYNCHRONISM WITH EACH OTHER

Aldo Righi, Bologna, Italy; vested in the Alien Property Custodian

Application filed May 7, 1938

Let R and S be two threephase systems which can be connected to one another by means of the switch A (Fig. 1). Between the two phases 1 and 2 of the system R and the ground be inserted the two singlephase voltage potential transformers B and C; between phase 3 and ground be inserted the singlephase voltage potential transformer D. When the switch A is closed, the three transformers B, C, D, may serve, together with the necessary current transformers, not represented in the figure, to feed a wattmetric measuring system; by F are represented the three conductors connecting the secondary coils of said potential transformers to the measuring apparatus not represented in the figure.

When the switch A is open, as there is no flow of energy, there is no reason for wattmetric measures; it is interesting, however, to use the secondary potentials of said potential transformers to actuate a device signaling the instant when the two systems R and S are synchronized. For this purpose resort is had to a small 3-phase transformer or, as represented by Fig. 1, three small single-phase transformers $G_1$, $G_2$, $G_3$, which will be called auxiliary transformers, whereof the primary coils $H_1$, $H_2$, $H_3$ are star-connected and the secondary coils are connected in series with one another and in series with a potential indicator, for instance a voltmeter V or a lamp M. It is apparent that in the instant when the two systems are synchronized, between the secondary potentials of the three transformers B, C, D exist the same relations verified when the switch A has been closed and the two systems are thus reduced to a single 3-phase system. In particular, it will be verified that the resultant of the three voltages is zero and, therefore, the current in the circuit consisting of the series of the three secondary coils $L_1$, $L_2$, $L_3$ and the voltage indicator will also be zero. In conclusion, at the synchronism, the voltmeter V will indicate zero and the lamp M will be extinguished.

To obtain the indication of the system having a frequency higher than the other, it is necessary to add two lamps N and P connected according to the old known wiring diagram of the phase lamps inserted on the secondary resulting voltages of the phase 3 and respectively phase 1 and phase 2, according to the wiring diagram indicated by Fig. 1; consequently the lamps N and P and the lamp M have a lighting rhythm either rightwise or leftwise according to whether of the two 3-phase systems is the more rapid. At the synchronism the two lamps N and P are both alight with the same intensity, but not at their maximum.

Fig. 2 gives the vectorial representation of the voltages applied to the three lamps at the moment of synchronism: $U_1$ and $U_2$ represent the secondary voltages of the transformers B and C, whilst $U_3$ represents the secondary voltage of the transformer D. To the lamps N and P are applied the delta-voltages E, respectively $E_2$, whilst to the voltmeter V and the lamp M is applied the resultant of the three voltages $U_1$, $U_2$, $U_3$.

The voltmeter V and the lamp M, however, are scarcely sensitive indicators of parallel, because at the moment of synchronism the intensity of current therethrough is zero.

In order to increase the sensitiveness of the synchronisation device, resort is had, according to the present invention, to a device, which, at the moment of the parallel operation the current, acting in the device and variable in relation to the phase displacement of the two systems to synchronise assumes its maximum value. This current, variable between zero and a maximum is caused to act either in voltmetric or dynamometric devices, this important result being also thus obtained, of having at disposal apparatus of wholly different characteristics and, therefore, differently influenced by possible unbalanced conditions of the potentials and phase displacements of the two systems to synchronise.

Let now the connections in any of the three secondary coils of the auxiliary single-phase transformers be interchanged with one another, which is equivalent to rotate of 180° the secondary potential; then the potential will become null when the two systems, instead of being in synchronism, are in opposition.

Fig. 3 represents the wiring thus modified: the three auxiliary single-phase transformers $G_1$, $G_2$, $G_3$ have their primary coils $H'_1$, $H'_2$, $H'_3$ still star-connected, but of the three secondary coils $L'_1$, $L'_2$, $L'_3$ the last has the connections inverted. The lamp M' and the voltmeter V', therefore, will indicate the synchronism at the point of maximum lighting and respectively at the maximum value instead of remaining extinguished or respectively indicating zero.

Fig. 4 represents the relative vectorial diagram; the resultant of $U_1$ and $U_2$ being equal to $-U_3$ and the potential $U_3$ having been inverted, the resulting potential acting on the terminals of the voltmeter V' and lamp M' is represented by the vector OU' having a length double than $U_3$.

If, instead of inverting the connections of the

secondary coil L'3, the connections of one of the other two secondary coils should have been inverted, the result would have been the same. Fig. 5 represents the diagram for the case where the inversion of the connections would have been performed on the secondary coil L'1; and Fig. 6 represents the relative vectorial diagram. The meaning of the letters of these two figures is the same as in the two foregoing figures.

A simplification of the above diagrams may be obtained by suppressing any one of the auxiliary single-phase transformers and opposing directly the secondary potential of the main potential transformer corresponding to the phase which was connected to the suppressed auxiliary transformer, to the resultant of the other two as it can be obtained from the remaining two auxiliary transformers having their secondary coils in series with one another.

Fig. 7 represents said simplified diagram in the case when the single-phase transformer suppressed be the one which in the foregoing diagrams was connected to the potential transformer D. In the new diagram is represented by K a bipolar commutator serving for inverting the connections between the terminals of the circuit comprising, besides voltmeter V'' and phase lamp M'', the secondary coils L'', and L''2 connected in series. The parallel is therefore possible either with the voltmeter reading zero or at the maximum, respectively either with the lamp extinguished or alight.

Fig. 8 represents the analogous simplified diagram for the case when the auxiliary transformer suppressed be the one which in the foregoing diagrams was connected to the potential transformer B.

By not suppressing one of the auxiliary transformers, it is possible to obtain the simultaneous indication on two distinct potential indicators, of the zero and maximum value at the synchronism. This is indicated in the diagram of Fig. 9, wherein is the fourth lamp, which at the synchronism is alight at the maximum whilst the lamp M is off and the lamps N and P are equally alight but not at their maximum. These four lamps acting as potential indicators (if desired, a voltmeter may be inserted in parallel with the lamp M and the lamp Q for obtaining a closer accuracy) give, still better than the three lamps M, N, P only, the indication of the direction of rotation of the resultant rotary field of the two systems to synchronise, if the fourth lamp is placed, as shown by the figure, in a position diametrally opposed to that of the lamp M along the periphery of the circle circumscribed to the equilateral triangle in the vertex whereof the lamps M N P are located.

The fourth lamp Q may be of the rarefied gas type, for instance a neon lamp. In this case a regulable resistance Y may be inserted in parallel; then at the synchronism a glare of light may be obtained, the other conditions being unchanged, lasting the longer, the less is the difference between the frequencies of the two systems and the more stable is the synchronisation.

According to another embodiment of the invention, resort is had to an electrodynamometer to indicate the moment of synchronisation of the two systems.

Fig. 10 gives the vectorial representation of the potentials at disposal and composition thereof for obtaining two new vectors representing the potentials which applied respectively to the fixed and movable coils of an electrodynamometer cause the latter to indicate the instant of synchronism by a well determined deviation of its index.

Let on a vector $OU_3$ a point X be taken such that:

$$OX=\tfrac{1}{2}(\sqrt{3}-1)\,U\cong 0.37U$$

were U indicates the amplitude of the secondary voltage of the voltmetric transformers. By known elementary geometric properties vectors $XU_1$ and $XU_2$ result perpendicular to one another if and only if the vector $U_3$ is displaced by 120° respectively to the vectors $OU_1$ and $OU_2$ that is if the two systems are synchronised. Consequently, if the fixed coil and movable coil of an electrodynamometer are passed through by a current in phase with the potentials represented by the vectors $XU_1$ and $XU_2$, the apparatus will read zero at the synchronism.

Suppose now to rotate by 180° the vector $O_3$; it will be in the position OY when the two systems are synchronised. The two vectors $XU_1$ and $XU_2$ obtainable by composition of the potentials $OU_1$ and ZO and respectively $OU_2$ and ZO, where ZO has the same direction and sense as OY but half its amplitude, lie along the same straight line only when the two systems are synchronised. If, therefore, to the movable and fixed coils of the electrodynamometer are led two currents which are in phase with the voltages represented by vectors $XU_1$ and $XU_2$, the apparatus will indicate at the synchronism the maximum value of the oscillation it undergoes with the variation of the phase angle of the two systems.

For obtaining two currents displaced of phase by 90° or 0° at the moment when the two systems are synchronised, so as to have in such condition no deviation or respectively the maximum deviation of the electrodynamometer, it is possible to act on the secondary potentials of the transformers causing a suitable displacement of phase thereof, in the following manner. As the vectors representing the delta-voltages $E_1$ $E_2$ $E_3$ form angles of 60° to each other, at the moment of synchronism of the two systems a displacement of phase $\alpha$ of any amplitude be given to any of said potentials, and to another of said potentials be given another displacement either of $(30°-\alpha)$ or respectively of $-(60°+\alpha)$ according to whether the resulting angle required is either of 90° or 0°, as $60°+\alpha+(30°-\alpha)=90°$, and $60+\alpha-(60°+\alpha)=0°$.

Figs. 12 and 13 give the wiring diagrams of an electrodynamometer for the parallel with the index reading respectively zero and maximum, according to what is vectorially represented by Fig. 10; and Fig. 14 gives the wiring diagram of an electrodynamometer with phase displacement of secondary potentials of the transformers for the parallel at zero or maximum according to what has been formerly illustrated.

In Fig. 12 both primaries $H_1$ $H_2$ $H_3$ and secondaries $L_1$ $L_2$ $L_3$ of the auxiliary single-phase transformers $G_1$ $G_2$ $G_3$ are star-connected. Whilst, however, the transforming ratios of $G_1$ and $G_2$ are the same, for instance 1, the ratio of $G_3$ is 0,37. By this way, the resulting voltages at the terminals of the coils $L_1$ and $L_3$ and coils $L_2$ and $L_3$ are displaced by 90° to one another when the two systems are synchronised. The electrodynamometer is represented by fixed coil $W_1$ and movable coil $W_2$; a regulable resistance having the object of registering the sensitiveness of the apparatus is represented by $Y_1$ and a resistance

limiting the current through the movable coil W is represented by $Y_0$.

In Fig. 13, of the three single-phase transformers, $G_3$ has a ratio which is the half of that of the other two and the connections thereof with the two transformers $G_1$ and $G_2$ are inverted.

In Fig. 14, $X_1$ represents either an ohmic or inductive resistance and $X_2$ represents a capacitative reactance, and by suitably proportioning the same a suitable displacement of phase can be given to the potential available at the terminals of the secondary coils of the transformers B and D. According to the diagram of Fig. 14 no phase displacement is given to the potential available at the terminals of the secondary coils of the transformers C and D, that is to the potential applied to the fixed coil $W_1$ of the electrodynamometer, because, as a simplification of the general solution above described, the angle $\alpha$ may be taken equal to zero, whereby the phase displacement of the potential applied to the movable coil W2 must be either 30° or —60° according to whether the electrodynamometer is wanted to read zero or the maximum at the synchronism.

The sensitiveness of the apparatus according to any of the above wiring diagrams is, however, very limited, as it is put in evidence by the law of variation of the internal couple of the apparatus, which is evidently a sinusoid. Such a curve has the tangent which is horizontal in the points corresponding to the two cases considered above.

A great sensitiveness of the apparatus is obtained, on the contrary, if it works apart from the maximum or the minimum of the sinusoidal curve, and, better, in a point where said curve is much inclined on the axis of abscissae. By this way the most important advantage of the inversion of the sense of deviation of the electrodynamometer on the point of synchronism is also obtained, said inversion corresponding evidently to the acceleration and respectively delay of frequency of one system with respect to the other.

A complete synchroniscope is thus realized, as it alone gives all the indications required for connecting in parallel two three-phase systems and controlling the speed of the alternator to synchronise. It is necessary, however, to add an auxiliary device to distinguish the real parallel from a false parallel, both indicated by the same deviation of the index of the apparatus, as in a whole revolution of 360° of the phase displacement of the two systems, the same value appears twice.

Different methods may be employed for feeding the electrodynamometer with two currents resulting at 90° to each other, both at the synchronism and at 180° from the synchronism and inverting the sign of the internal couple of the apparatus by increasing or respectively decreasing the displacement of phase between the currents passing through the two coils of the electrodynamometer. For instance, resort may be had to a Scott connection between two auxiliary transformers connected on the secondary potentials of the potential transformers, or more simply a delta-voltage, as $U_1$, $U_2$, and the opposite star-voltage, as $OU_3$ (Fig. 10) may be utilised. As auxiliary device resort may be had to a phase lamp connected as the lamp M', of Fig. 3, which is alight at its maximum at the moment of parallel and remains extinguished at the moment of the false parallel. It is apparent that things may be arranged so that the index of the apparatus be rendered visible only by the light issued by said lamp, any possibility of mistake being thus eliminated. The fading of the light and the rightowards or leftwards deviation with respect to the synchronism will indicate most evidently whether the parallel conditions are being reached or departed from, and whether of the two systems has to be accelerated or delayed for reaching the parallel conditions.

Fig. 15 reproduces the diagram of Fig. 3 as regards the lamp M'. The fixed coil $W_1$ of the electrodynamometer is connected between phase 3 and the earth, through the regulable resistance $Y_1$; the movable coil $W_2$ is connected between the secondary phases 1 and 2 through the limiting resistance $Y_0$.

Fig. 16 represents by G' a small transformer connected between the secondary phases 1 and 2, having an intermediate terminal in the middle connected to a terminal of the primary of another auxiliary transformer, whilst the other terminal thereof is connected to the secondary phase 3. The secondary of this transformer feeds the coil $W_1$ of the electrodynamometer, whilst the other coil $W_2$ is connected to the same secondary phases 1 and 2 whereto is connected the transformer G''. The latter and the transformer G'' have the ratio of number of spires requested by the well known Scott connection.

ALDO RIGHI.

PUBLISHED
MAY 18, 1943.
BY A. P. C.

# A. RIGHI

## DEVICE FOR SIGNALING THE INSTANT WHEN TWO SYSTEMS OF THREE-PHASE ELECTRIC CURRENTS ARE IN SYNCHRONISM WITH EACH OTHER

Filed May 7, 1938

Serial No. 206,693

3 Sheets-Sheet 1

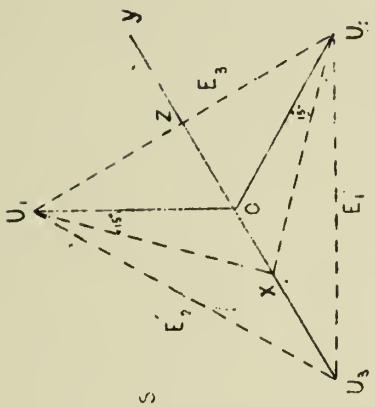


Fig. 10

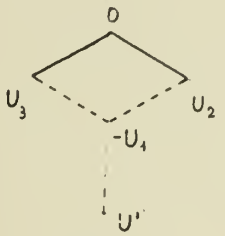


Fig. 6

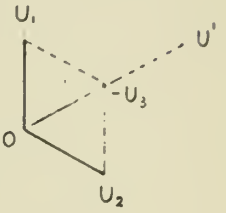


Fig. 4

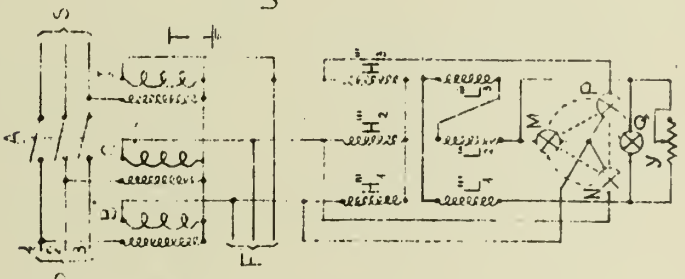


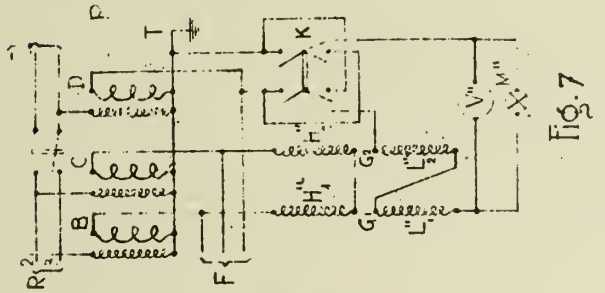


Fig. 7

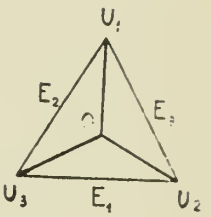


Fig. 2

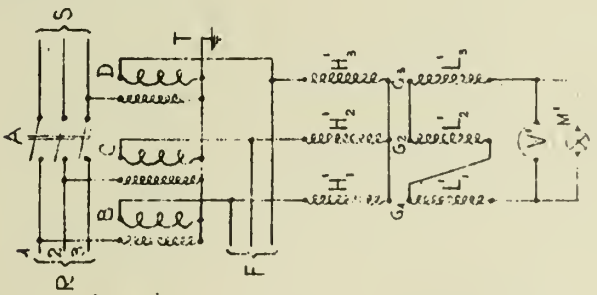


Fig. 3

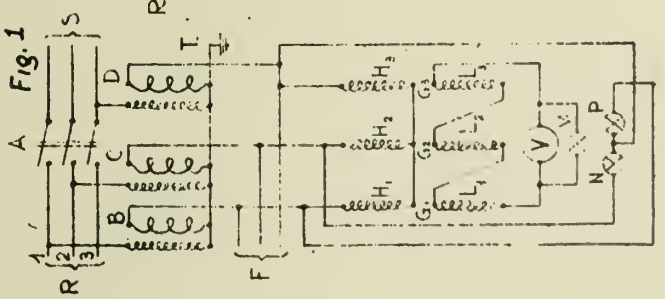


Fig. 1

Inventor
Aldo Righi
By
Young, Emery & Thatcher
Attorneys

PUBLISHED
MAY 18, 1943.
BY A. P. C.

A. RIGHI
DEVICE FOR SIGNALING THE INSTANT WHEN TWO SYSTEMS OF THREE-PHASE ELECTRIC CURRENTS ARE IN SYNCHRONISM WITH EACH OTHER
Filed May 7, 1938

Serial No. 206,693
3 Sheets-Sheet 2

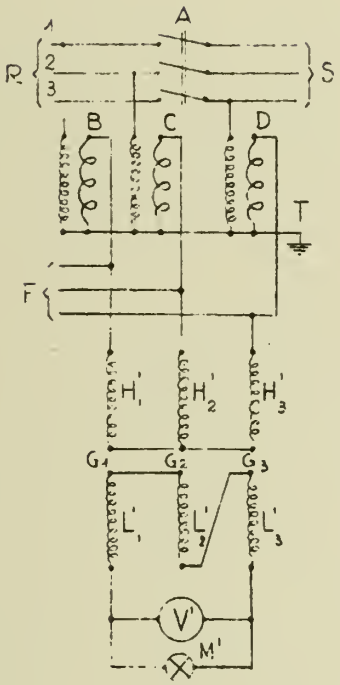


Fig. 5

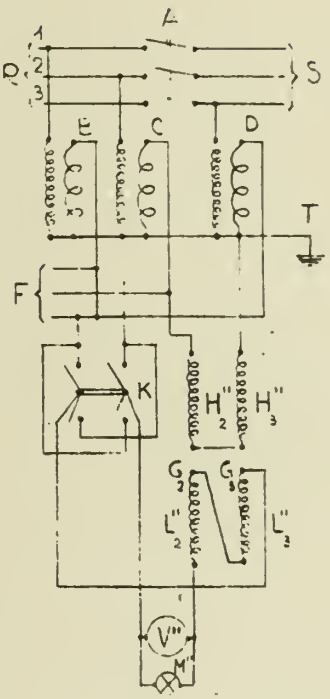


Fig. 8

Inventor
Aldo Righi

By Young, Emery & Thompson
Attorneys

PUBLISHED
MAY 18, 1943.
BY A. P. C.

A. RIGHI
DEVICE FOR SIGNALING THE INSTANT WHEN TWO SYSTEMS OF THREE-PHASE ELECTRIC CURRENTS ARE IN SYNCHRONISM WITH EACH OTHER
Filed May 7, 1938

Serial No.
206,693
3 Sheets-Sheet 3

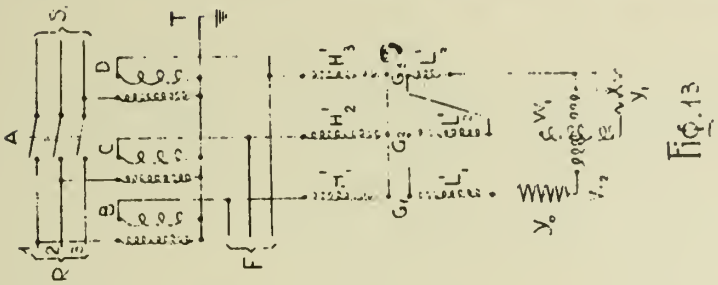

Fig. 13

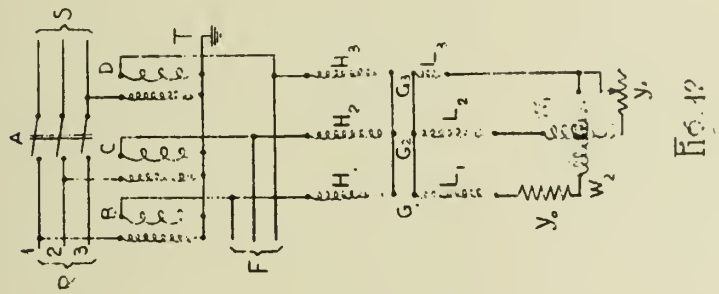

Fig. 12

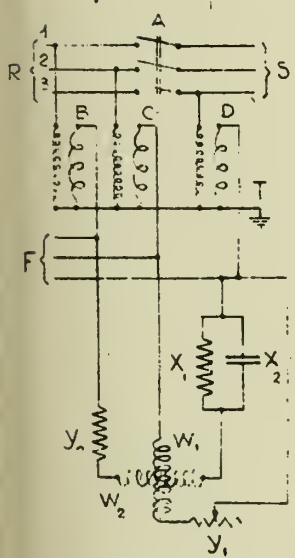

Fig. 14

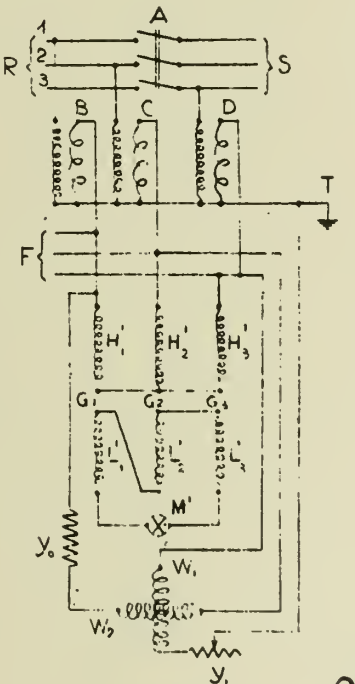

Fig. 15

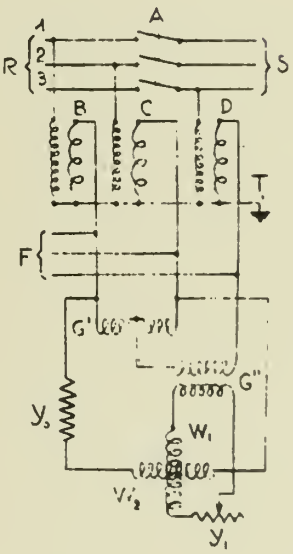

Fig. 16

Inventor
Aldo Righi

By Young, Emery & Thompson
Attorneys

Published May 18, 1943 Serial No. 209,675

# ALIEN PROPERTY CUSTODIAN

## SYNCHRONIZING AIRSCREWS

Eduard Seppeler, Berlin-Neukolln, Germany;
vested in the Alien Property Custodian

Application filed May 24, 1938

The deficiencies of present day engines, the need for graduated braking during steep gliding, and the desire to be able to fly at different angles of incidence under the same conditions of flight, compel first of all adjustment of the value of the constant speed at which the air screws are held or are to be held by regulation.

Air screws are known which work at one or more different fixed, i. e. constant, speeds. Such propellers contain means which permit variation of the position of the propeller blades automatically under the influence of some external force or by hand, so that the propeller is regulated to a selected engine speed with but small departures above or below.

For that purpose some means is always necessary which operates on the rotating propeller from a part which is stationary relatively to it, say the engine housing. Various such transmission means of a mechanical or electrical kind are known. Electrical transmissions necessitate the use of sliding contacts.

As compared with the above the basic idea of the present invention is to transmit or take up electrically the energy needed to adjust the propeller blades, by induction across an air gap between an exciting field mounted on the screw bearing and an armature rotating with the propeller or with any shaft of fixed speed ratio relatively to the propeller. The invention, of which some examples of constructions are described below, offers the following among other advantages as compared with what is known:

(1) The possibility of regulating and holding in exact synchronism any desired number of air screws from one central point irrespective of their output.

(2) The possibility of temporarily reversing the regulation by reversal of polarity, for example for gliding.

(3) The possibility of controlling the gas and fuel supply to the engine, its charge pressure regulator and other devices in the engine or aircraft electrically by variation of speed and reversal of polarity.

The invention will be found in the combination of the following characteristics:

A. A generator of time current or timing frequency, common to all the screw drives to be controlled, which is adjustable as regards timing frequency by hand or by the action of flying conditions, but retains its setting when adjusted.

B. A generator of comparison current or comparison frequency for each screw drive driven by or connected with that drive so that its timing is in fixed ratio to the speed of the screw.

C. A frequency comparator, for comparing the timing frequency and comparison frequency.

D. A control means which is adjusted by the frequency comparator of C, to cause increase of blade pitch of the associated screw when the comparison frequency leads and decrease of blade pitch when the comparison frequency lags.

E. A circuit-breaker and reverser for reversing the direction of regulation of D or interrupting the regulation.

The timing generator A may be a motor and polyphase generator regulated as regards speed by hand or automatically; it may also be a mechanical-electrical assembly, or a thermionic valve assembly based on oscillatory circuits and fed with direct or alternating current. Instead of a timing current magnetic impulses or indicative impulses, produced for instance by rotating magnets, may be used. The timing generator may also be constructed as a ring potentiometer which converts direct current into polyphase current; or finally it may be a frequency converter which converts a current of one frequency into a current of another constant frequency.

The generator of comparison current B may, as in A, be a screw drive of mechanical nature regulable by hand or a valve assembly based on oscillatory circuits, the frequency of which must stand in fixed ratio to the speed of the associated screw drive. B may also be constructed as a ring potentiometer or as a rotating magnet.

The frequency comparator may as regards mechanical construction consist of a rotating armature with a swinging stator winding, or, as in the double field motor, of a winding for timing current and an opposite winding for comparison current. Of these windings one must be fixed and the other able to swing, so that during the swing energy may be transmitted from the comparator to the control means B. The frequency comparator may also be formed as a valve assembly, which generates controlling current impulses under the action of timing and comparison current, in the one direction or the other according as the timing current leads or lags in frequency upon the comparison current. The frequency comparator must work uniformly at all differences of frequency. The torque must not, as in synchronous armatures, sink nearly to zero on large slip, nor must the control action of this torque reverse, as with a single phase current on large slip.

The control means D must respond to the con-

trol impulse of C by bringing into play energy for adjusting the blades of the propeller, either supplying power itself or bringing into and out of action a servo-motor, a brake or the like, and so drawing energy for adjustment from the rotation of the screw to be controlled. The control means may also take part in an automatic regulation of the pitch of the blades, e. g. when the blade pitch is determined by centrifugal forces opposing springs.

As to E, for certain special operation in screw propulsion, for instance, on swinging the blades into and out of gliding position, or from gliding position into and out of braking position, or when the blades are held in gliding or braking position, all further adjustment being out of action, the adjusting device D needs to reverse its direction of adjustment, or to be put out of action. This is achieved by reversal of polarity or by switching off the control impulses from C and their action on D, for which purpose a circuit breaker and a reversing switch are employed.

In order that C and D may not cease to act when large differences of frequency occur, that is to say when the one frequency falls wholly out of step with the other, nor reverse their direction of action, or oscillate, stator and rotor are equipped with asynchronous squirrel cage windings, i. e. they have short-circuited conductors in their pole faces, like double field motors and synchronous motors. The frequency comparator and control means should not be built as a single phase motor for that reverses its control action when the difference of frequency is large and therefore cannot be used for synchronising screw propeller, nor can its control action necessarily reverse on reversal of polarity.

Several examples of constructions embodying the invention are illustrated in the accompanying drawings.

The first construction according to Figures 1—3 comprises a polyphase exciting field **6** mounted on the engine housing **1** concentrically with the crank shaft **2**, and an armature **7** revolubly mounted on, for instance, the propeller housing **3**. The armature is built with salient poles *a*, Figures 2 and 3, so that it tends to keep in step with the rotating exciting field **6**. It has also a squirrel cage winding *b*, to produce a large starting torque, so that starting asynchronously it can bring itself into step with the exciting field **6**. It may equally well be an avowed synchronous armature excited by direct current or having permanent magnetism, and having an asynchronous squirrel cage winding for starting.

Figure 2 also shows the ball bearing with cage *c* on which the armature is revolubly mounted on the propeller housing; and teeth *d* by which power for adjustment is conveyed through gearing **8** to an adjusting and guiding mechanism **5** which varies or maintains the pitch of the blades **4**.

In place of the teeth *d* an abutment *e* may be provided as in Figure 3, to actuate the control member **9** of a servo-motor **10**, which serves instead of **5** to adjust and maintain the pitch of the blades **4**.

The regulating action is due to the armature **7** tending to keep in step with the rotating field produced by **6**, not only turning at the same speed but keeping almost in phase, and opposing any effort to bring it out of step, forces known in electro-technology as synchronous armature swinging torque. So long as the air screw runs synchronously with the armature **7** and with the rotating field, no force arises and no relative movement occurs between the armature **7** and the propeller housing **3**. But the instant the propeller **3**, **4**, **5** gains upon **7** adjusting energy is delivered from the crown of teeth **7***d* through gear **8** to the gear **5**, or controlling force for the servo-motor **10** is applied by the abutment *e*, and this continues until by adjustment of the angle of incidence of the blades **4** the propeller **3**, **4**, **5** or **3**, **4**, **10** is made to run at the timing speed of **7** and **6**. When the air screw lags as compared with **6** and **7** adjusting forces occur in the opposite direction, which then call forth opposite variations in the blade angle of incidence, until the speed of revolution of the screw **3**, **4**, **5** or **3**, **4**, **10** has been made equal to that of **6** and **7**.

The consequence is that every propeller so constructed adjusts itself in speed and phase to a timing frequency given by a central point, independently of its output and flying load. The central point may, for instance, be a converter assembly of very small dimensions running at a controlled speed, or it may be a motor-screw assembly running at a controlled speed with a three-phase generator attached to it.

In the case of Figure 3 the energy for adjustment is almost zero when the control means are balanced, while in the case of Figure 1 it assumes values of from 0.01 to 0.25 HP, according to the speed of adjustment of **4**, for screws up to 800 HP output. The intrinsically greater mains load, through excitation of **6**, of the arrangement according to Figure 1 as compared with the arrangement according to Figure 3 may in turn be kept small by an artifice, by causing the blades **4**, by mounting them on spiral ball bearings, by eccentric masses, spring forces and the like, to tend towards small pitch (adjustment in the direction for a lagging screw), in the direction, that is, in which otherwise energy transmission from **6** to **7** would have to effect the overtaking. If **2**, **3**, **4** lead on **7** and **6** energy is transmitted over **8** or **9** to **7** and so to **6**, and flows back to the mains. It would therefore be possible, through the tendency of **4** to set itself to a smaller angle of incidence, to obtain a constant return of energy from **7** to **6** and so to the mains.

The like result follows, according to Figure 3, from the provision of a small spring **11** on the control piston **9** which tends to control the servo-motor in the direction for diminishing the angle of incidence of the blades and so constantly sets up an opposing force in **7** which works against it, releases energy in **6** and so charges the mains or supplies the no-load current of the timing member.

In Figure 13 a regulator **48** is illustrated which converts the current so returned to the characteristics necessary for a battery-charging current.

Conversely to the above the exciting field **6** may be movably mounted on the engine housing **1** according to Figure 4, while the armature **7** is fixed on the propeller shaft or the member **3** driven by it. A control arm *e* on the exciting field **6** actuates, for example, a control piston **9** which over the conduit **13** actuates the servo-motor.

For the method of working indicated in Figure 4 it is immaterial whether the armature **7** is on the propeller shaft itself, or on a shaft rotating at a proportional speed, for instance where the engine is geared the armature may be anywhere on the crank shaft or any shaft driven by it instead of on the propeller shaft.

Figures 6 to 11 show various modifications illustrating these possibilities. Figure 6 corresponds with the arrangement according to Figure 1. In Figure 7 the armature and exciting field are removed from the screw end to the remote end of the engine. Figure 8 shows the armature on a shaft driven by the crank shaft and the exciting field arranged to swing in the engine housing. Figures 9 to 11 show the constructions of Figures 6 to 8 for geared engines.

In parallel with the timing mains is a similar arrangement, as illustrated in Figure 4, on each gas or fuel injection regulator or charge pressure regulator of the aircraft engine. For example, in Figure 5, 14 indicates the throttle valve to which the usual control rod 15 is connected by a spring 16. On the spindle of the throttle valve is mounted an armature 7 and opposite it on the engine an exciting winding 6. The torque of the armature 7 works against the torque exerted on the throttle valve through the control rod and spring, so that variation of the timing speed (change of frequency equals change of output) or reversal of polarity of the excitation also brings about a variation in the position of the throttle, as is required on changing over from normal operation to gliding or braking position.

If, conversely, the throttle valve is connected with the exciting field and the armature driven from any engine-driven shaft, change of timing as between armature and exciting field gives rise to torque which adjusts the connected engine element, f. e. the throttle valve. On increase of the timing speed the throttle, for example, is opened, while on fall of timing speed it is closed until the engine takes up the timing speed, whereupon the displacement of armature relatively to field vanishes and the throttle is restored to its initial position.

The properties of the electrical adjusting action call for a simple adjusting mechanism of high ratio but small friction. The high ratio is to secure that even large disturbing and oscillatory forces on the blades shall be easily taken up by the adjusting mechanism. On the other hand all the blades must be similarly guided by this adjusting gear without any play, since the least variations of angle among the blades give rise to severe vibration.

This problem is solved by the scheme of Figure 12. The end wheel 36 of the transmission gear 8 drives the sleeve 37 which is mounted in ball bearings 45 and 46 on the pin 44 of the propeller hub 3. This sleeve is provided on its outer surface with spiral ball grooves 38, which have a pitch of about 2%. In these spiral grooves lie balls 41, guided by a cage 42, and these in turn engage in annular races 40 in the guide ring 39. The balls lie always at the points where the spiral inner tracks cross the annular outer tracks. By inserting the balls under stress, and the cage preventing jamming notwithstanding the intersecting tracks, the guide ring 39 constitutes a guide member adjustable parallel to itself without play, by which the several blades 4 may be adjusted by means of projecting pins 43 and rods 47, or instead of these by press rollers, and held without play in the position in which they are set.

EDUARD SEPPELER.

PUBLISHED
MAY 18, 1943.
BY A. P. C.

E. SEPPELER
SYNCHRONIZING AIRSCREWS
Filed May 24, 1938

Serial No.
209,675
3 Sheets-Sheet 1

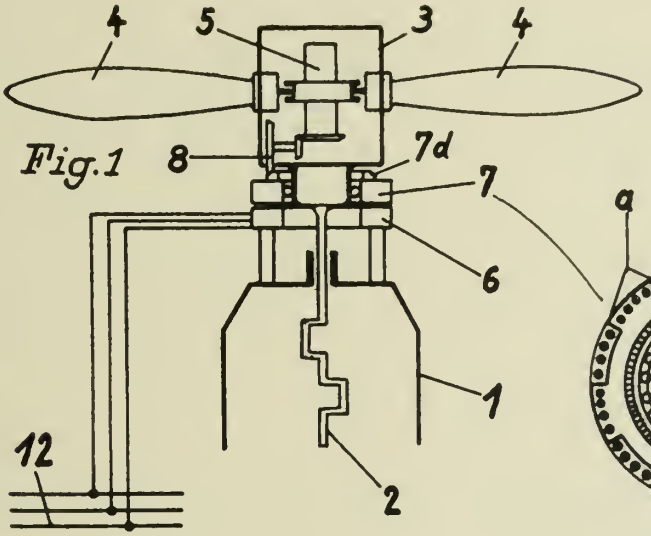


Fig.1

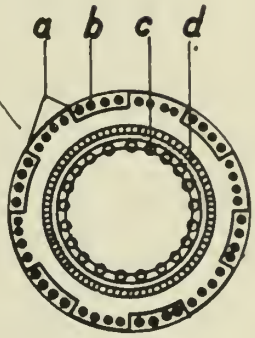


Fig.2

Fig.3

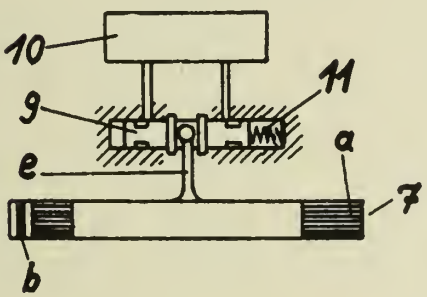


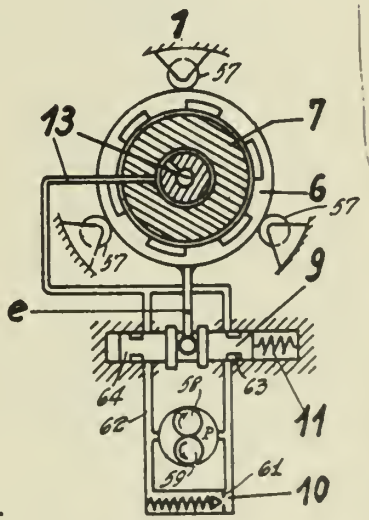


Fig.4

Fig.5

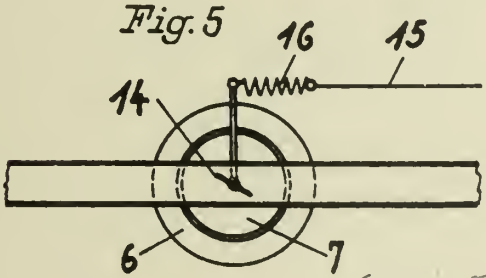


Inventor:
Eduard Seppeler

By A. P. C.
Attorney

PUBLISHED
MAY 18, 1943.
BY A. P. C.

E. SEPPELER
SYNCHRONIZING AIRSCREWS
Filed May 24, 1938

Serial No.
209,675
3 Sheets-Sheet 2

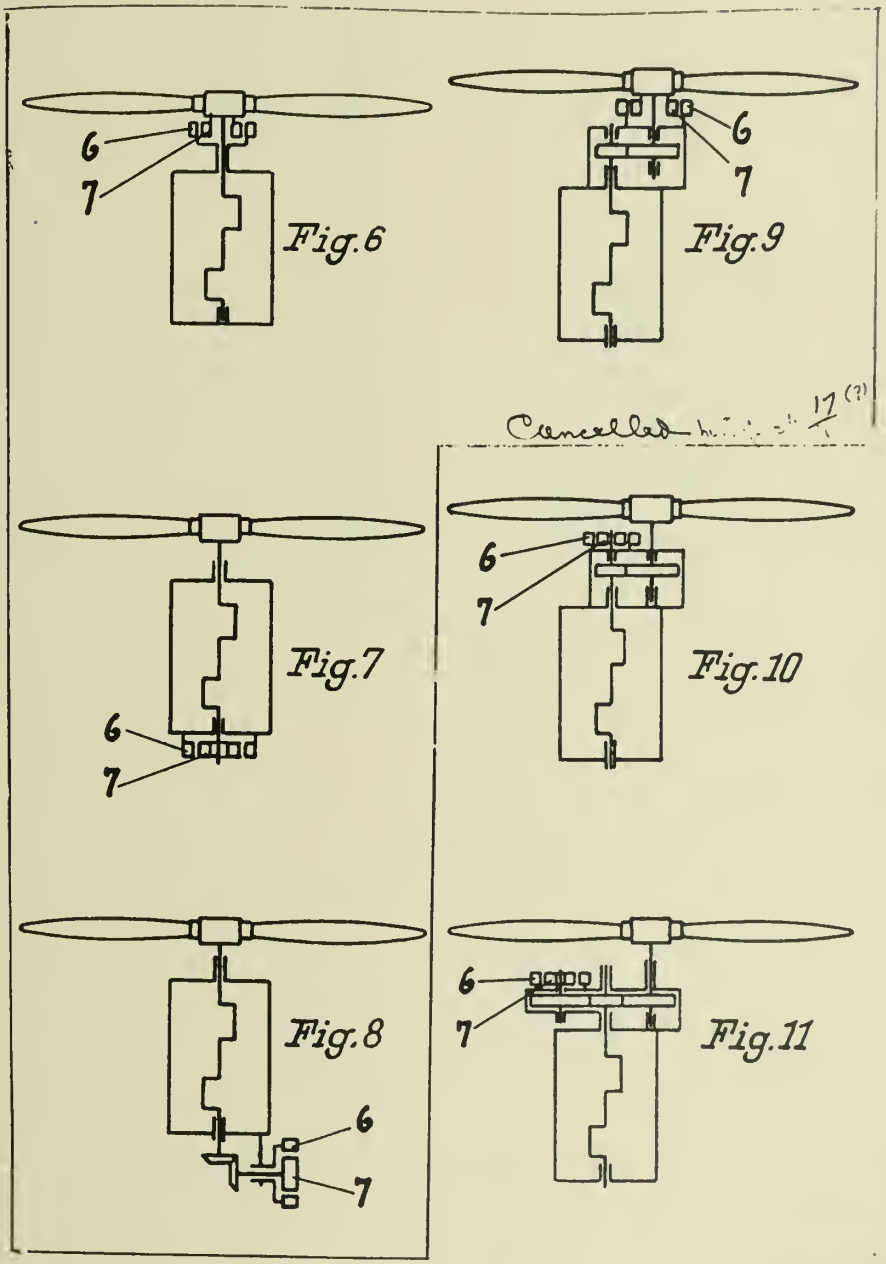


Inventor:
Eduard Seppeler
By A. P. Card
Attorney

PUBLISHED
MAY 18, 1943.
BY A. P. C.

E. SEPPELER
SYNCHRONIZING AIRSCREWS
Filed May 24, 1938

Serial No.
209,675
3 Sheets-Sheet 3

Fig.12

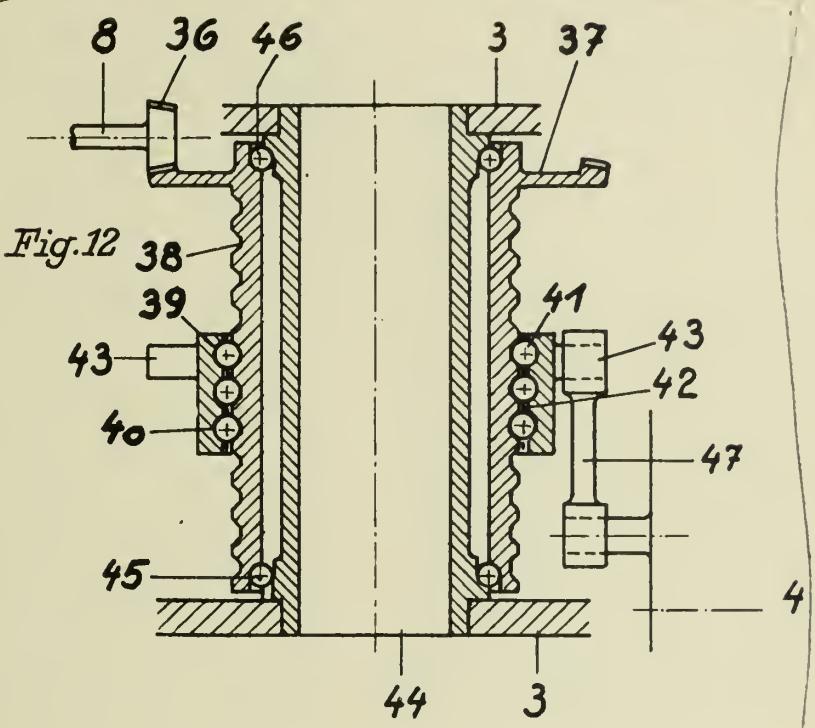


Fig.13

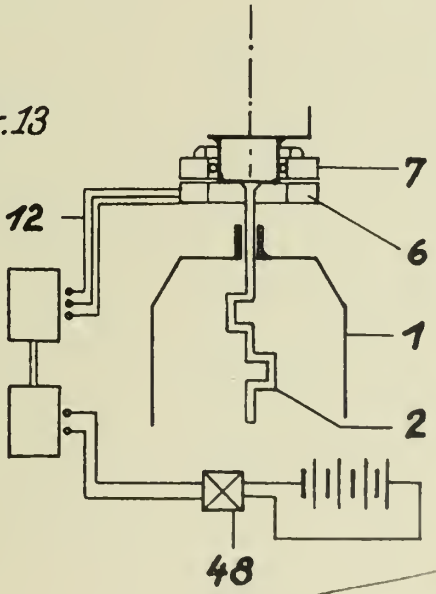


Inventor:
Edmund Seppeler
By J. E. Odell
Attorney

Published May 18, 1943 Serial No. 210,426

# ALIEN PROPERTY CUSTODIAN

## PROCESS FOR REDUCING THE RAPIDITY OF THE REACTION OF ZINC DUST

Günther Hänsel, Berlin - Siemensstadt, and Michael Passer, Berlin-Spandau, Germany; vested in the Alien Property Custodian

No Drawing. Application filed May 27, 1938

This invention relates to a process for reducing the rapidity of the reaction of zinc dust.

The fine zinc dust required in various industrial processes, which may also have to serve as reducing agent or as catalyser, must in some cases have a certain measurable rapidity of reaction to permit of avoiding that such processes terminate too rapidly. This requirement is not sufficiently met with by pure electrolytically prepared zinc dust, as it was found, that already in a few seconds the major part of this zinc dust had undergone reaction and that complete reaction of this product of high rapidity of reaction had taken place in most cases already after one minute.

A surprising fact is, that such extreme rapidity of reaction can be advantageously reduced by adding finely divided lead to the zinc dust. For the purpose of obtaining a sufficiently fine distribution of the lead in the zinc, common electrolytical separation of the lead with the zinc can be attained in a simple manner.

It has been found that the rapidity of reaction of the zinc dust is dependent on the content of finely divided lead. Comparisons were made with 4 zinc powders having 0.1, 0.15, 0.32 and 0.74% lead contents. For decomposition was selected the formation of sulphate in sulphuric acid of 15%. There were ascertained as duration period of reaction in the same sequence the following values: 7 minutes, 15 minutes, 30 minutes, 210 minutes (3½ hours). On basis of this finding of the definite relation between the lead contents of zinc dust and the rapidity of reaction it will be possible when applying the process in accordance with the invention to advantageously adjust a predetermined or desired rapidity of reaction of the zinc dust by dosing or graduating the amount of the lead contents.

When working in alkaline electrolytes, as they are used, for instance, in obtaining zinc dust from zincate solutions, the purely chemical solubility of the lead, which in the case of intended common separation at the cathode dips into the electrolyte in the form of additional anodes, is so considerable that it will not be possible any longer, for instance by altering the electrical conditions, to dose the lead contents in the zinc dust obtained. It is therefore preferable in cases of this kind to eliminate the purely chemical dissolving effect of the alkaline electrolyte as far as at all possible. This object may be attained in accordance with the invention by using as anode material lead alloys in place of pure lead. As alloy components for the lead anodes, which do not show any or but very slight purely chemical solubility in zincate electrolytes, are coming into question, among others, tin, cadmium, silver, individually or jointly.

*Example*

Into a highly alkaline zincate solution were dipped rod-shaped anodes, normal zinc anodes and additional strip-shaped anodes of a lead alloy with 2% tin. The current supplied with the electrolysis by way of the zinc anodes amounted to 7 ampere with a tension of the bath of 0.9 volt. The lead anodes were loaded with currents of different intensity between 0.005 and 0.05 ampere. From this current intensity at the lead anodes resulted the above-stated differing lead contents in the zinc powder.

For the reduction of the rapidity of reaction of zinc dust may be also used arsenic, antimony, bismuth, mercury and/or silver, in place of lead. Also mixtures of one or several of the said metals with lead, if added to the zinc dust in finely divided condition, will result in the effect, according to the invention, of reducing its rapidity of reaction.

GÜNTHER HÄNSEL.
MICHAEL PASSER.

Published May 18, 1943 Serial No. 211,843

# ALIEN PROPERTY CUSTODIAN

## POWER REGULATION FOR AIRCRAFT ENGINES

Albert Stieglitz, Berlin-Spandau, Germany;
vested in the Alien Property Custodian

Application filed June 4, 1938

The present invention relates to power regulation for charged internal combustion engines of aircraft, in which is used a variable screw which by means of a regulator keeps any adjusted calculated speed constant. The known power regulators have the disadvantage, that by breakdown of the regulator by breakage of the capsule or sticking, the internal combustion engine is rendered completely non-controllable, or they are made by the auxiliary rod arrangement provided to have multiple parts and become unreliable thereby.

According to the invention these drawbacks are avoided by keeping, by means of a regulator actuating the throttle valve, the pressure or the density of the charge behind the throttle valve and before the blower constant at a definitely adjusted calculated value up to full power altitude. This pressure corresponds to the external air pressure in the full power altitude. A certain charge pressure will then adjust itself for each speed remaining almost the same with the altitude. Hence, this regulation is based on a predetermined connection between the speed and pressure of the charge. The relation between the pressure of the charge and the speed results in the fact, that full power altitudes for all pressures of the charge are about the same and corresponding to the rated power altitude, this being a relation, which in other cases is often selected intentionally.

Keeping the pressure constant before the charger, results with the altitude in a slight increase of the pressure of the charge owing to the temperature decreasing. If instead of the pressure the density of the air is regulated before the charger, a slight decrease of the pressure of the charge will be obtained with the altitude. If the capsule which for measuring the pressure is evacuated and for measuring the density is completely filled with air is now only partially filled with air, the course of the pressure of the charge and in consequence thereof the course of the power may be influenced with the altitude within certain limits as desired.

The invention is shown on the drawing in plan view in two modes of construction.

Figure 1 shows the regulator in connection with a one-stage blower.

Figure 2 shows a construction of the regulator with a multi-stage blower.

The throttle valve 1 regulates the air current in the suction pipe 3 extending to the charger 2. The throttle valve 1 is connected by the rod arrangement 4, 5 with the double-armed lever 6, which on the one hand, is connected with the actuating lever 24 by the rod 7, on the other hand by the piston rod 8 with the operating piston 9 of the regulator. The impulse transmitter 10, consisting of several capsules, of the regulator is arranged in a chamber 11, which is connected by the piping 12 with the suction pipe and in which the same pressure obtains as before the charger. On a charge of pressure the impulse transmitter 10 shifts the control piston 13, which in known manner regulates the pressure oil supply to the operating piston 9 and in consequence thereof the operating motion of said piston. In the case of the pressure in the suction pipe before the charger differing from the calculated value, the throttle valve is continued to be adjusted by the regulator by way of the operating piston and the rod arrangement, until the calculated value has been reached.

The speed regulator of the variable screw 22 is connected to the common actuating lever 24 through the rod 23 and the bell-crank lever 16. The control piston 19 held in equilibrium by the centrifugal weights 18 and the spring 17 controls through the conduits 20 in a well-known manner the pressure oil supply to the variable screw 22 thus influencing the airscrew pitch. The calculated speed adjusted by the actuating lever 24 through the tensioning of the spring 17 is held constant by the speed regulator.

If the actuating lever 24 is shifted so as to attain a higher power (to the right-hand side) the speed regulator 18 is on the one hand adjusted for a higher calculated speed and on the other hand the throttle valve 1 is opened to a further extent. However, the proper position of the throttle valve in which for the higher speed the same pressure before the charger is attained is only adjusted by the pressure regulator 10.

When using a two-speed charger the calculated value of the regulator must be altered when changing the speed, corresponding to the two differing full power altitudes for the two transmission stages. This is effected in the example shown in Fig. 2 by sliding the end of the capsule over the lever 14 by the rod 15, connected with the speed changer, which is actuated by hand or automatically. Changing the calculated value may also be effected in any other known manner, for instance, by a slide on the control piston or by a throttle valve in the throttle chamber of the regulator. In the case of a no-stage regulable charger gear, the calculated value must always be changed with the speed of the charger.

ALBERT STIEGLITZ.

PUBLISHED
MAY 18, 1943.
BY A. P. C.

A. STIEGLITZ

POWER REGULATION FOR AIRCRAFT ENGINES

Filed June 4, 1938

Serial No.
211,843

Fig. 1

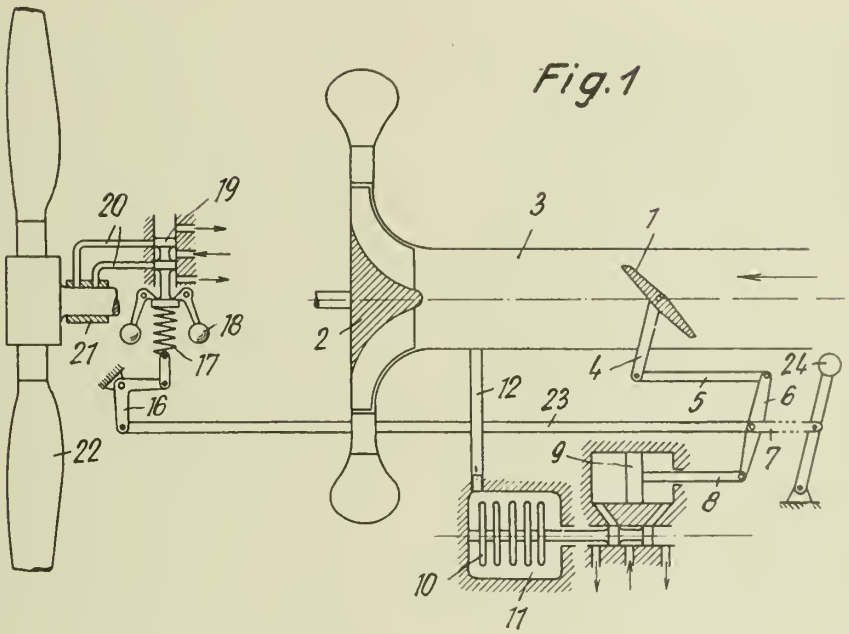


Fig. 2

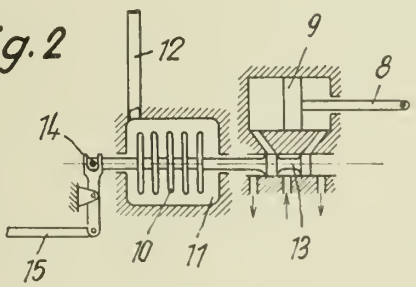


Inventor
Albert Stieglitz
by Knight Bros
Attorneys

Published May 18, 1943 Serial No. 214,954

# ALIEN PROPERTY CUSTODIAN

## PROCESS FOR THE MANUFACTURE OF ZINC

Hermann Wolf, Ernst Kuss, Hans Hohn and Fritz Stietzel, Duisburg, Germany; vested in the Alien Property Custodian

Application filed June 21, 1938

The present invention relates to the electrolytic production of zinc by use of a mercury cathode.

It is known that many difficulties are encountered in the electrolytic production of zinc according to the usual processes due to the strongly electro-negative character of the metal, the tendency for hydrogen to simultaneously deposit, corrosion of the deposited metal by local elements produced by impurities in the electrolyte, the formation of zinc sponge, and the like. By reason of the strongly electro-negative character of zinc, the zinc has a marked tendency to redissolve in the electrolyte. This tendency is greatly augmented when the zinc deposits irregularly to form warts and buds on the cathode since there occurs at these irregularities a lowering of the hydrogen overvoltage with a resultant corrosion of the cathode. It is, therefore, necessary to interrupt the electrolysis when the cathode, by reason of the formation of such irregularities, reaches a certain size.

It is quite universally the practice to deposit the zinc from sulfate solutions from which any chlorine ions should be excluded. While the electrolysis of zinc chloride solutions is theoretically superior to the electrolysis of sulfate solutions because of the possibility of simultaneously obtaining chlorine, this theoretical superiority is difficult of realization in practice due to the yield diminishing corrosion to which the cathode is exposed by virtue of the presence of dissolved chlorine in the electrolyte. It has been considered necessary in order to avoid this corrosion as far as possible, to employ a diaphragm to separate the anode from the cathode. This of itself adds to the expense of the process as does the time which must be spent in attending to the diaphragm. Furthermore an appreciable amount of voltage is absorbed by the diaphragm, making its use further objectionable for this reason. When all these factors are added to the further factor which requires the use of extremely pure electrolytes in order to obtain reasonable current efficiencies, it will be appreciated that the electrolytic recovery of zinc presents very serious obstacles to its practical adoption.

It has now been found that most of the disadvantages which have heretofore manifested themselves in the electrolytic recovery of zinc may be overcome by the utilization of a mercury cathode for the electrolysis while operating at elevated temperatures and while observing certain precautions in separating the zinc from the mercury cathode for reuse of the mercury in the process. There have been some proposals in the past to employ mercury as a cathode for the electrolytic production of zinc. In most of these proposals it was suggested that the zinc amalgam obtained be immediately subjected to distillation. In certain cases, however, it was suggested that the zinc amalgam produced in the original electrolytic step be used as an anode in a subsequent step, the zinc being dissolved from the anode and being re-deposited on a solid cathode. The employment of mercury as a cathode has certain disadvantages which were not overcome in the prior processes. Thus mercury cathodes, when subjected to the action of an electric current, have a tendency to pulsate whereby furrows and elevations are formed in the surface of the mercury which either lead to short circuits with the anode or at least make it impossible to space the anode and cathode a short distance apart to insure a working at relatively low bath voltages. Furthermore amalgamation between the mercury and the deposite metal often does not take place properly, the zinc frequently forming as a very reactive gray mud or slime on the surface of the mercury whereby the cell becomes covered with this mud or slime and the current efficiency decreases. The mud operates also to develop hydrogen and in addition cannot be worked up into pure zinc. The mud also effects a clogging of pipes and pumps necessary in a continuous process, thereby preventing a continuous and automatic operation.

On the other hand there are particular advantages which are offered by the use of a mercury cathode on which attention has not been particularly focused up to the present time and which recommend the use of a mercury cathode providing of course that the disadvantages previously mentioned can be overcome. For instance the amalgams have for the same current efficiency an essentially smaller surface area than solid cathodes and for this reason alone the tendency for the deposited metal to re-dissolve is lessened. The amalgams moreover behave quite generally against corroding electrolyte constituents in a nobler manner than metallic zinc and therefore permit electrolysis of zinc chloride solutions without the utilization of a diaphragm. There is, moreover, no tendency for couples to be formed in the amalgams so that a far-reaching purification of the electrolyte which is necessary with solid anodes in order to prevent formation of such couples with resultant corrosion is not required. There is in addition no necessity to add special preparations such as colloids and the

like to the electrolyte. Finally inasmuch as the amalgams are liquid, their preparation and working up can be effected in a completely continuous and automatic manner. In spite of these advantages all processes suggested up to the present time for obtaining zinc by use of mercury anodes have been technically unsuccessful probably because steps were not taken to overcome the disadvantages mentioned above as well as certain difficulties which make their presence felt in the working up of the amalgam.

It is an object of the present invention to provide a process for the deposition of zinc from zinc containing lyes which is free from the difficulties which previously were encountered in the electrolytic recovery of zinc from zinc-containing solutions.

It is a further object of the present invention to electrolytically deposit zinc from zinc-containing solutions while employing a mercury cathode and while insuring that the cathode may be spaced a short distance from the anode without the danger of the formation of short circuits arising.

It is a further object of the invention to electrolytically recover zinc from zinc-containing solutions by means of a cell having a mercury cathode while operating at elevated temperatures.

A further object of the invention comprises the electrolytic deposition of zinc with a mercury cathode while circulating the cathode and the electrolyte.

A further object of the invention involves the provision of steps to preclude contact of atmospheric oxygen with the amalgam formed in the electrolysis during the working up of the amalgam.

It is a further object of the invention to facilitate separation of the zinc from the amalgam by mechanically concentrating the amalgam prior to the isolation of the zinc from the mercury.

It is a further object of the invention to insure purification of the electrolyte from arsenic and antimony compounds.

A further object of the invention involves the separation of the zinc from the mercury in the amalgam obtained by electrolysis by an efficient distillation procedure.

A further object of the invention comprises a two-stage distillation of the amalgam, the first stage being conducted under reduced pressure.

It is a further object of the invention to provide a process for recovering zinc from chlorine-containing solutions without the use of a diaphragm.

It is a further object of the invention to provide a process for electrolytically recovering substantially pure zinc from zinc-containing solutions while realizing a high current efficiency.

A further object of the invention involves the apparatus for carrying out the electrolytic process.

Other objects will be apparent from the following detailed description.

As previously stated, we have now found that it is technically possible to take advantage of the possibilities of a mercury cathode in producing zinc from zinc-containing lyes by taking certain precautions during the electrolytic process and during the decomposition of the amalgam into zinc and mercury. These precautions involve, first, the use of elevated temperatures, preferably from 55° C to the b. p. for the electrolysis of the zinc-containing solutions. By working at these higher temperatures, the tendency of the mercury to pulsate is avoided and the formation of the zinc in the form of a mud is precluded even at high current densities. This permits circulation of the cathode without disturbance to the mechanical equipment. Furthermore the anode and cathode can be spaced within a few millimeters of each other without dangers of short circuiting, a considerable saving in current thereby being realized.

Generally elevated temperatures are avoided in the electrolysis of zinc solutions for the reason that they lead to a decrease in current efficiency by lowering the hydrogen overvoltage and by increasing the rate of chemical corrosion (see heading (f), page 314 of "Applied Electro-Chemistry" by Allmand and Ellingham, 2nd Edition). It is, therefore, surprising that in the process developed by us the utilization of high temperatures contrary to leading to the objections noted in the above treatise, operate to facilitate the carrying out of the electrolytic process.

The second precaution involves the production of an amalgam having a "good flowability." By an amalgam with a good flowability is understood an amalgam which resembles pure mercury in its flowability, does not contain any solid amalgam particles and does not show any tendency to separate into more or less thick amalgam pulps. The good flowability of the zinc amalgam is a function of the temperature and the amalgam concentration so that these 2 factors must be most carefully supervised. The following examples serve to further illustrate what is meant by an amalgam with a good flowability:

Amalgams with 2% Zn at 25°
Amalgams with 4% Zn at 70°
Amalgams with 5% Zn at 80°

If these limits be surpassed the amalgams, it is true, are still liquid. They will not, however, flow well in the sense of the present process as they are no longer quite homogeneous and tend to eliminate crusts and pulpy products.

The consistency of the amalgams at a specified zinc content and a constant temperature may fluctuate a good deal. Dry, well flowable amalgams, especially when in movement, are slowly permeated by thick, spongy deposits or dross, which destroy their flowability and clog the pipes and apparatus in time. This can be avoided by carefully excluding oxygen of the air from contact with the amalgam, for instance by employing closed apparatus and conduits or by causing an inert gas to flow over the surface of the amalgam. It is also possible to operate with great advantage by covering the amalgam in the troughs or channels provided for its conduction and also in other apparatus parts with a weak acid, for instance very dilute hydrochloric acid. In this case the channels may be subdivided by means of plates or riffles partially immersed in the amalgam, that is to say the plates or riffles do not extend to the bottom or floor of the troughs or channels. It is expedient, too, in this case to exclude the oxygen of the air from contact with the amalgam.

A further precaution concerns correlation of current density with speed of movement of the mercury cathode. It has been discovered that with the mercury cathodes lower current efficiencies are obtained when the cathodes are in motion than when the cathodes are at rest, the decrease in efficiency being the greater, the

greater the movement of the mercury. In order to obtain good current efficiencies, the current densities must not be too low. On the contrary, they must be the higher the greater the speed of flow of the mercury. The movement of the amalgam must in any case be slow and as even as possible, turbulence in movement being avoided at all costs, else the current efficiency decreases strongly and less pure, especially nickel- and cobalt-containing amalgams are obtained. Advantageously the movement is restricted to such an extent that it just suffices to guarantee a uniform concentration of the amalgam in continuous operation and to avoid the occurrence of isolated deposits of higher zinc concentration. This movement may be effected by forming the mercury cathode in horizontal streams or rows which have a uniform fall or gradient of 1 to 2 millimeters per meter.

We have found that especially satisfactory current efficiencies can be obtained if the enrichment of the zinc in the amalgam be effected in steps in various cells operating in series rather than in a single cell. For instance the process may be operated in such a manner that the amalgam formed in each cell is led in a cycle, a certain part of the amalgam being branched off from each cell and led to the next succeeding cell. The quantity of amalgam branched off from each cell should as a rule be high enough to correspond to the quantity of zinc simultaneously precipitated by the electric current. The amalgam concentration prevailing in each cell can be regulated by a temporary throttling of the amalgam supply or by adding fresh mercury. It is preferable to operate so that in each succeeding cell the amalgam concentration increases by about 1%. For the conduction of the amalgam and for effecting the necessary current interruption it is advantageous to arrange the related cells one over the other so that the amalgam flows without the aid of pumps or other conveying devices and merely under the influence of gravity from one cell to the other.

It is advisable to carry out the electrolysis with lyes rich in zinc, for instance with 100 grams of zinc per liter. It is a characteristic of the process, however, that it is also suitable for electrolysis of lyes poor in zinc. The process offers for example the possibility of working up lyes obtained by a chlorinating roasting of pyrites in a simple manner to zinc and chlorine. As is known, the main elements in such lyes are copper and zinc combined with lead, nickel, cobalt, cadmium, gold, silver and other impurities. The individual elements are eliminated in known manner one after the other by suitable operations until there remain only zinc dissolved as zinc chloride in comparatively slight concentration together with alkaline earth chlorides and large quantities of sodium chloride and different heavy metal impurities. In former practice lyes of this type were treated by precipitating the zinc as oxide, dissolving the oxide in sulphuric acid and after a high purification, electrolyzing the resultant sulfate. This conversion of very impure chloride solutions into highly purified sulfate solutions is cumbersome and difficult and the economic success is problematical.

By our process the treatment of such zinc lyes requires merely a simple cementation by means of zinc dust to precipitate the major part of the other metals present. It is not necessary to completely purify the lyes since purification need only go so far as is commensurate with the desired degree of purity of the deposited zinc. Of the impurities present the copper, lead and cadmium go quantitatively into the zinc amalgam upon electrolysis, nickel only partly and cobalt hardly at all. As no couples are formed, the current efficiencies are not influenced to any particular extent. The presence of magnesium and alkaline earths in the electrolytes is of no importance. The presence of large amounts of sodium chloride is, however, quite desirable. Contrary to the electrolysis of the sulfate solutions in which traces of chlorine in the electrolyte cause a strong corrosion of the anodes, the electrolysis of zinc chloride solutions with mercury cathodes and anodes stable to chlorine is not affected at all by large amounts of sulfate. The chlorine developed at the anode has the usual purity and can be collected dried and densified in the usual manner.

The current efficiencies obtainable with mercury cathodes decrease after the removal of zinc from the lyes has advanced to a certain stage. Accordingly, therefore, the electrolysis is discontinued when the zinc content of the electrolyte reaches about 15 to 20 grams per liter. The lye is then treated with lime to precipitate zinc hydroxide which is recovered and used for the removal of iron from the initial lyes.

It is believed pertinent to note that the amalgam cathodes are not insensitive to the impurities of the electrolytes in all cases. We have found that at high temperatures and with other conditions adjusted so as to otherwise obtain a suitable deposition of zinc, a spongy deposition of zinc may occur if there be present in the electrolyte arsenic or antimony compounds. These disturbances can be avoided if these two impurities are removed quantitatively from the electrolyte. This can be accomplished in a known manner by precipitating the ferric iron present in the electrolyte as ferric hydroxide. If necessary, in order to accomplish this purpose, iron may be separately added to the electrolyte. Similarly the effect of very small quantities of arsenic or antimony compounds can be minimized or avoided by adding small quantities of mineral acids. If this method be resorted to, it is preferable not to exceed a certain acidity such as about pH=1.

A further precaution which must be observed deals with the distillation of the amalgam by which the zinc is recovered in pure form and the mercury regenerated for further use. It is of decisive importance that this distillation be effected with the best possible utilization of heat, with cheap heat sources, without loss of mercury and as continuously as is possible. The furnace material must be resistant to attack by fused high percentage amalgam and pure zinc respectively. The mercury must be practically completely removed from the zinc. This requirement can be satisfied only by the employment of temperatures at which difficulties are to be expected with the materials for the distillation apparatus. Either the materials that come into question are resistant to hot zinc and zinc amalgam and are not impermeable to gas and do not permit the employment of economical heating methods, i. e. ceramic materials, or they permit the employment of economical heating methods but are quickly destroyed by high percentage hot amalgams, i. e. metallic materials. The zinc is thereby contaminated to a non-desirable extent.

The distillation apparatus utilized up to the present time are such that a pure zinc and especially a zinc practically free from mercury cannot be obtained in a technically satisfactory manner.

We have now ascertained that the main quantity of mercury can be eliminated by heating the amalgam to comparatively very low temperatures, and the remainder by heating the zinc for a short time up to or almost up to its boiling point. The distillation can, therefore, be effected with special advantage in two main steps, in the first of which the amalgam from the electrolytic cells is enriched to a concentration of, say, about 50 to 60% zinc in one or more distillation apparatus connected with each other and in the second of which the mercury still present is completely eliminated in a further distillation apparatus operated at essentially higher temperatures. The distillation apparatus for the first step preferably has metallic heat conducting parts which are provided with a suitable protective coating. It is advisable in operating these apparatus to supply heat externally and to distill under strongly reduced pressure. As the protective coating theer may be used enamel since the distillation temperatures under reduced pressure lie below the temperature destructive of enamel. While the amalgam is still comparatively liquid, that is while it contains only up to about 10% of zinc, said protective layer may be omitted and there may be employed as the furnace material either cast iron, weldable iron or thermosilide (an alloy of iron and silicon). The external heating of the distillation apparatus may be advantageously effected by mercury vapor which either comes directly from a mercury boiler and is reintroduced into the boiler without a pump, or by the exhaust steam of mercury turbines, high pressure mercury vapor, gas or any other suitable and cheap source of heat. In this distillation step there may be employed continuous working thin layer evaporators or circulation evaporators of suitable construction which are arranged in series and which operate at different working temperatures. These temperatures increase from chamber to chamber with increasing amalgam content and may be lower the better the vacuum and the wider the pipes from the distillation chamber to the condensation plant. The temperature of each individual unit must not exceed the melting point of the amalgam treated therein. This result can be secured by suitable reduction of pressure and by a properly selected speed of throughput. The size of the individual units decreases considerably with increasing amalgam concentration. The quantity of mercury distilled from each chamber should be continuously maintained under control. The condensation of the mercury vapors can be effected in coolers or heat exchangers which are located at the highest point of the plant. By this method, a decrease in the quantity of circulating mercury and a simple return of the mercury to the cells may be achieved. The heat of condensation may expeditiously be employed for the production of steam. In this first distillation step there may be distilled off more than $\frac{9}{10}$ of the total mercury. As a consequence the greatest part of the total heat required is utilized in this step and, therefore, the efficiency of the process depends to a large extent upon the possibility of relying upon a cheap source of heat for this step.

The distillation apparatus for the second distillation step is preferably a melting furnace constructed of ceramic material or pressed graphite and is operated without a reduction in pressure or with only a slight reduction in pressure. The amalgam may be continuously introduced into the furnace by a barometric overflow pipe, the pure zinc being taken off also continuously by means of an overflow syphon filled with nitrogen. It is possible to construct the melting furnace in the form of a column. However any other apparatus which may be operated at the necessary high temperatures is capable of utilization.

It is advantageous to conduct so much heat to the distillation unit that a quiet or even slightly violent distillation of the zinc is effected. Furthermore it is advisable to provide the melt with large surface areas, to effect movement of the melt and to lead a rapid current of gas over the surface of the melt. For best results the heating in this unit should be similar to that of the so-called high frequency furnaces. Moreover, to avoid zinc deposits it is preferable to construct the condenser attached to the distillation chamber according to the principle of the injection condenser and to operate it with the initial amalgam. We have also discovered that a considerable decrease in the size of the distillation plant can be achieved if the warm and well flowable zinc amalgam leaving the electrolytic cells is not subjected to distillation without further ado but is first cooled by allowing it to flow into cold, weakly acid water and by separating the amalgam into a concentrate rich in zinc, destined for distillation, and into a fraction poor in zinc which, diluted with the mercury obtained by distillation, is led back into the cells. This fractionation of the mercury may be effected by decanting, sieving, centrifuging or the like. The amalgam concentrate obtained in this way is advantageously further concentrated by mild pressing to a sandy, butter-like or loamy consistency. In this way there is obtained an amalgam having a zinc content of about 12%. The exhausted fraction which is returned to the cells is the poorer in zinc the lower it is cooled before fractionation.

The accompanying drawing illustrates diagrammatically an apparatus suitable for carrying out the present invention.

The invention will be further explained by reference to the following examples. It is to be understood, however, that these examples are illustrative only.

*Example 1*

A zinc sulfate lye containing about 100–105 gms. of zinc per liter of solution, prepared from an oxidic starting material and sulphuric acid and purified according to usual methods, is electrolyzed at 70° C. with a current density of 1000 amperes per square meter and a voltage of about 3.2 volts while using a mercury cathode and a "Tainton" anode until there is obtained an amalgam containing 3.65% of zinc. A part of the electrolyte is branched off and recirculated continuously for the dissolution of further parent material while simultaneously neutralizing the sulfuric acid electrolytically formed. The readily flowable amalgam is drained off and dried under a vacuum. It is separated in a distillation apparatus operated under vacuum and a temperature slowly increasing to about 640° C. into a mercury distillate having a zinc content of 0.23% and into a zinc melt which is drawn off into casting molds. The mercury is recycled to the electrolytic cells. The zinc obtained has a purity of 99.98%.

*Example 2*

Roasted pyrites of 55.10% Fe, 1.99% Cu, 2.39% Zn, 240 gms/ton Co, 300 gms/ton Mn, 0.04% Sb, 3.45% S, 0.11% As, 1.40% Pb, 4.05% $SiO_2$, 62.0 gms/ton Ag, 1.02 gms/ton Au are, after addition of 10% sodium chloride, chlorinatingly roasted and lixivated to produce a lye. The lye is de-coppered with iron clippings and cooled to 0° to effect the removal of the bulk of the sodium sulfate. The remainder of the sulphur together with Fe, As, Sb, Mn and Co are precipitated by lime with simultaneous introduction of chlorine to a pH of 5.5. After filtration there is obtained a zinc chloride lye rich in sodium chloride, which contains magnesium- and calcium-chloride in small amounts. The zinc content amounts to 60 gms/liter. In the lye there are still present per liter, 12 mg Fe., 13 mg Co, 5 mg Ni and some Pb as well as Cd. This lye is electrolyzed in cells designated on the drawing as A which are similar to the cells used in alkali-chlorine electrolysis. The mercury cathode B is cycled inside the individual cells and flows in the form of a horizontal stream for a distance of 8 millimeters under the graphite anode C with a speed of 9 cm/sec. The working temperature is 70° C., the current density 1200 amperes per square meter and the voltage of ab.3.2.v Mercury is continuously introduced in each cell and amalgam with 4–4.5% zinc is continuously drawn off from each cell by an overflow E. The electrolyte F circulates through the cells in a continuous stream and leaves the cells with a content of about 20 grams of zinc per liter. The zinc is precipitated with lime and the zinc hydroxide obtained is utilized in lieu of the calcium compound for the purification of the initial lye. The amalgam is continuously led to a concentration plant G comprising four chambers H, wherein it is brought to a content of 55% zinc by employment of reduced pressure. Thereby are distilled off from the total mercury to be separated:

80% at a temperature around 220°
3% at a temperature around 260°
5% at a temperature around 300°
3% at a temperature around 350°

The necessary heat is supplied to the distillation units by mercury vapor. The heat passes through the iron wall of the units which are protected by an enamel layer against the action of the hot amalgam. The concentrate obtained in this distillation step flows into an equalizing vessel R and from there into a distillation furnace I constructed of ceramic material. This furnace contains a zinc sludge maintained at a boiling temperature by high frequency heating. In this furnace the last residues of the mercury are evaporated and are precipitated together with the simultaneously developed zinc vapors in an injection condenser L which is loaded with the initial amalgam. The mercury vapors from the first distillation are precipitated in heat exchangers M arranged at a highly elevated position in the system in which superheated steam is produced. The mercury condensate flows under the influence of gravity to the electrolytic cells. Zinc is obtained in a purity of 99.95%. The chlorine gas obtained is dried in the usual manner and condensed. In contradistinction to the chlorine gas obtained in the electrolysis of potassium chloride, it is free from hydrogen.

*Example 3*

A concentrate of zinc-lead-ore, which has been obtained by the flotation process, is mixed with a 24 fold quantity of roasted pyrites. The mixture then contains 57.90% Fe, 0.84% Cu, 3.57% Zn, 200 gms/ton Co, 15 gms/ton Ni, 20 gms/ton Cd, 300 gms/ton Mn, 0.04% Sb, 0.09% As, 2.18% Pb, 4.95% $SiO_2$, 3.20% S, 49.0 gms/ton Ag, 1.26 gms/ton Au. It is mixed with 12% of sodium chloride and converted to a zinc lye in the manner described in Example 2. The lye is then subjected to cementation with zinc dust to precipitate the metals more electro-positive than zinc. The lye now has a zinc content of 65 gms per liter. The zinc is removed therefrom by a treatment in 4 electrolytic cells, lying one above the other so that the amalgam passes successively through the cells under the influence of gravity. The amalgam is moved in a cycle in each cell. The quantity of amalgam branched off is so controlled that in the first cell there is maintained an amalgam with a concentration of 1% of zinc; in the second 1.8% of zinc; in the third 2.6% of zinc and in the fourth 3.4% of zinc The temperature of electrolysis is about 75° C., the current density about 1000 amperes per square meter and the voltage of about 3.2 volts. The current efficiency is 95–97%. By working up the amalgam according to the method of Example 2, zinc having a purity of 99.995% is obtained.

*Example 4*

Roasted Meggener pyrites is mixed with copper containing roasted pyrites in a proportion of 1:1. The mixture contains 53.00% Fe, 0.55% Cu, 5.20% Zn, 240 gms/ton Co, 750 gms/ton Mn, 0.04% Sb, 0.14% As, 0.53% Pb, 8.30% $SiO_2$, 3.95% S, 25.00 gms/ton Ag, 0.82 gms/ton Au. Sodium chloride in an amount of 12% is added to the mixture and converted into a zinc lye containing 65 grams of zinc per liter according to the method of Example 2. The lye obtained is electrolyzed at a temperature of about 75° C with a current density of 800 amperes per square meter and a voltage of about 3.1 volts in four electrolytic cells while operating as described in Example 3. An amalgam containing 4.35% of zinc is produced in the electrolysis. The amalgam is cooled to 5° C by allowing it to flow into air-free cold water containing 0.5 grams of HCl per liter, and is separated by means of a helical sieve into 56 parts of a readily flowable fraction containing 1.65% of zinc and into 44 parts of a doughy concentrate containing 7.80% zinc. The concentrate is continuously forced by means of a conveyor press into the distillation apparatus. By distillation 40.6 parts of mercury are obtained whereas, had the amalgam been distilled without mechanical concentration, it would have been necessary to have distilled off 75.4 parts of mercury. The distillate is combined with the afore-mentioned readily flowable fraction to produce an amalgam containing 1% of zinc which is then returned to the electrolytic cells. The last traces of mercury are removed from the zinc by heating in a graphite furnace brought to 900° C by "Kryptol" heating (a form of resistance heating wherein the resistance element is made from a mixture of graphite, carborundum and the like). A zinc having a purity of 99.96% is obtained.

*Example 5*

A zinc amalgam obtained by electrolysis according to Example 4 is cooled to 18° C by allowing it to flow into 0.01 n hydrochloric acid. By

leading the amalgam over a shaking screen and mildly pressing it, there are obtained 21.5 parts of concentrate containing 12.2% of zinc and 78.5 parts of a fraction containing 2.2% of zinc. The subsequent distillation of the concentrate results in the production of 18.9 parts of mercury whereas, had the amalgam been directly distilled without previous concentration, the distillation would have led to the production of 57.6 parts of mercury. The concentration prior to distillation, therefore, results in a 66% saving in the distillation.

*Example 6*

The shaking screen apparatus employed for the separation of the amalgam according to Example 5 is completely closed and a gas stream consisting of 97% of nitrogen and 3% of hydrogen, which has previously passed a hot furnace maintained at about 500° C and loaded with copper screen or net, is slowly introduced. It is possible by this means to insure that there will be no formation of slag in the amalgam during the working up of the amalgam.

*Example 7*

The trough or channel serving for the circulation of the amalgam in a cell is provided with an air-tight closure and is sealed at its ends by means of plates immersed in the amalgam to such an extent that, while the amalgam may still flow in the trough, the plates operate to close off the whole transverse section of the trough which is not occupied by amalgam. In other words, said end plates, while immersed in the amalgam, do not extend to the bottom or floor of the channel or trough. Water at a temperature of about 70° C and containing 3.5 gms per liter of HCl trickles over the surface of the amalgam inside of the trough. This provides an alternative method for insuring that oxygen will not be permitted to contact the amalgam, thereby preventing the formation of slag in the amalgam.

*Example 8*

A zinc-chloride lye containing sodium chloride, .03 grams per liter of arsenic and .04 grams per liter of antimony, has added thereto an excess of ferric chloride. The iron is then precipitated by the addition of lime. The lye thus obtained is filtered and the filtrate brought to pH=1.5 by the addition of hydrochloric acid. The solution is then electrolyzed at 80° C with a mercury cathode at a current density of 1500 amperes per square meter and a voltage of ab. 3.4 volt. while operating according to Example 3. The zinc amalgam thus obtained is then worked up into zinc and mercury in the manner previously described.

HERMANN WOLF.
ERNST KUSS.
HANS HOHN.
FRITZ STIETZEL.

PUBLISHED
MAY 18, 1943.
BY A. P. C.

H. WOLF ET AL

PROCESS FOR THE MANUFACTURE OF ZINC

Filed June 21, 1938

Serial No.
214,954

2 Sheets-Sheet 1

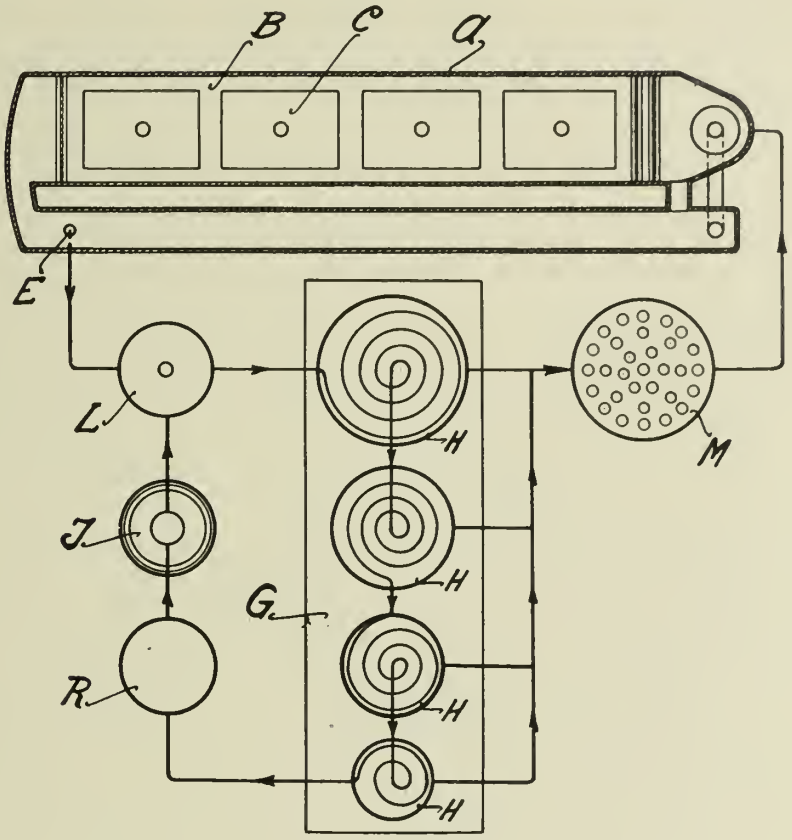


Fig. I

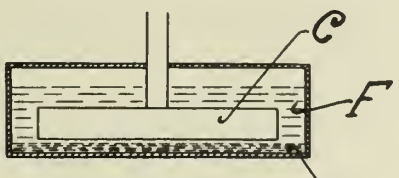


Fig. II

Hermann Wolf
Ernst Kuss
Hans Hohn
Fritz Stietzel
INVENTORS
BY Kurtz and Joslin
THEIR ATTORNEYS

PUBLISHED
MAY 18, 1943.
BY A. P. C.

H. WOLF ET AL
PROCESS FOR THE MANUFACTURE OF ZINC
Filed June 21, 1938

Serial No.
214,954
2 Sheets-Sheet 2

Fig. III

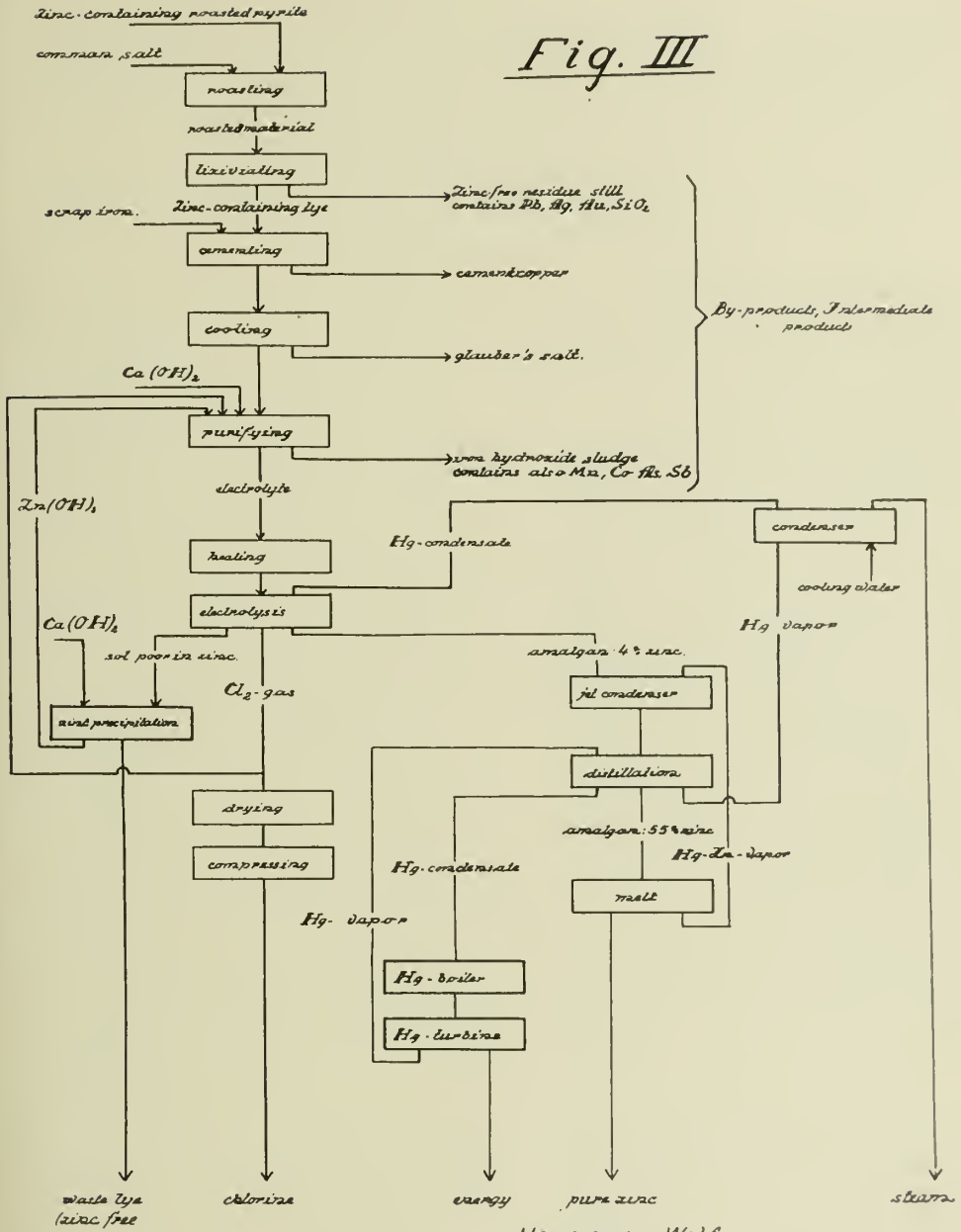


Hermann Wolf
Ernst Kuss
Hans Hohn
Fritz Stietzel
INVENTORS

BY Hutz and Joslin
THEIR ATTORNEYS

Published May 18, 1943 Serial No. 216,289

# ALIEN PROPERTY CUSTODIAN

## METHOD FOR ELECTROLYTICALLY REFINING COPPER AND ITS ALLOYS

Günther Hänsel, Berlin-Siemensstadt, Germany; vested in the Alien Property Custodian

No Drawing. Application filed June 28, 1938

The present invention relates to a method for electrolytically refining copper and its alloys as well as for electrolytieally treating copper- and copper alloy-plated metals.

In refining impure copper the electrolysis is, as a rule, effeeted in a solution of sulfate of copper. This method presupposes the use of eoarse copper in which the traces of impurities are slight. Considerable amounts of foreign metals which are not so noble as eopper, sueh as, for instanee, zine or nickle, impair the efficiency of this method materially so that it was not advisable to treat copper alloys, such as bronze, brass, German silver, etc., aecording to this method. If, for instance, an alloy containing 85% Cu and 15% Zn is refined aecording to an electrolytic method the copper sulfate electrolyte is so considerably contaminated with zine after a rather short time that the deposit of solid copper on the eathode is materially impaired; furthermore, the bath voltage inereases considerably as a result of a decrease in the eonductivity. A separation of the zinc from an electrolyte so contaminated in the manner that the zinc precipitates in any form as a chemical compound and that the sulfate of copper remains in the solution is not possible in a solution of copper sulfate. In this case the eopper must first be eompletely preeipitated, for instance, by electrolysis and then the zinc sulfate must be erystallized out of the solution by concentrating the latter by evaporation. A eomplete separation of the sulfate of zine from the sulphuric acid to be produced is only possible by concentrating the acid to a very considerable extent.

A further very great drawback of the abovementioned method is the fact that the elcctrolyte bccomes rapidly poor in copper if copper alloys are employed. In the treatment of a copper-zinc alloy as, for instanee, above deseribed only 85 parts go anodieally into solution, whereas 100 parts are, however, deposited on the cathode. The result is that the electrolyte beeomes poor in copper and that eopper must be continuously added as copper sulfate or in any other form.

It has already been proposed to effect the electrolysis in the elcetrolyte containing cuprous chloride. When using such solutions containing chlorine ions the regeneration of the copper eontent of the solution may then be effected in a very simple manner if care is taken to oxidize a portion of the cuprous ehloride after leaving the electrolysis to copper chloride, which, for instance, may be accomplished by the supply of air or chlorine. This solution of copper chloride is then brought in a suitable manner into contact with copper metal or also with the alloy itself to be treated, for instance, in the form of a granulated metal. The regeneration of the copper content, thus effected, is performed according to the equation:

$$CuCl_2+Cu=2CuCl$$

In the ease of an electrolysis in a solution containing euprous ehloride the treatment of the solution rich in foreign metals presents, however, also the same difficultics as encountered in the copper sulfate solution.

It could be ascertained that the treatment of copper containing foreign metals by electrolysis is readily possible and that in this case all disadvantages of the electrolysis presented in sour solutions are eliminated if the eleetrolytic refining of copper and its alloys as well as the electrolytie treatment of copper- and copper alloy-plated metals is effected in an ammonium solution containing copper in whieh the copper is dissolved both in a bivalent and univalent form.

The effect of the method according to the invention as to preventing an impoverishment of the copper eontent in the electrolyte is explained by the faet, that during the electrolysis of a copper alloy eontaining, for instance, 85% copper and 15% zinc, not 85 parts of copper but 100 parts of eopper go anodically into solution and this is aceomplished by the additional chemical dissolution of the anode alloy in the ammoniacal solution. The reaction occurs according to the equation:

$$Cu''+Cu=2Cu'$$

Consequently, considerably greater amounts of eopper or of the alloy to be treated go anodically into solution than would eorrespond to the electroehemical equivalent. In this manner alloys containing rather great amounts of foreign metals, such as, for instance, German silver having 70% Cu, 20% Ni, 10% Zn as well as brass having 63% Cu and 37% Zn may be treated.

In treating such alloys it is essential according to the invention that the electrolyte has a sufficiently high percentage of free ammonia in order to attain always a rapid dissolution of the copper as an amine compound. A content of more than 10 to 15 g/l proved favorable. An electrolyte containing 20 to 50 g free ammonia per liter was employed to advantage. The higher the content of $NH_3$, the more rapid and easier is effected the reaction according to the above equation. Since it is, however, important to maintain the copper content as far as possible as great as at the beginning of the electrolysis it is advisable to choose

the above-indicated $NH_3$ percentages. In this case the losses of ammonia by volatilization are also kept at a low value. Besides copper also all other metals go into solution which are soluble in ammonia, such as, for instance, nickel, zinc, cobalt.

In keeping constant the copper content in the electrolyte it is important that the electrolyte is always properly stirred, for instance, by an agitator or also by causing a very strong circulation of the electrolyte when the same is circulated through the baths. This intense stirring of the electrolyte is necessary in order to always maintain as high as possible a percentage of free ammonia in the immediate neighborhood of the anodes. Otherwise, the purely chemical and also the electrochemical dissolution is impaired by the $NH_3$ impoverishment.

The above-mentioned percentage of free $NH_3$ as well as the stirring of the electrolyte are very important for the treatment of copper- or copper alloy-plated metals. It has been found that copper and its alloys may be the more completely separated from the basic metal the higher the percentage of free ammonia in the neighborhood of the alloy to be treated. The separation of the coating metal is effected the easier, the higher the content of the accompanying metals in the plated copper alloys. Thus, for instance, tombac or brass separates much easier than pure copper.

In refining copper and its alloys as well as in treating copper- or copper alloy-plated metals it is, however, not only essential that the desired reaction occurs at the anode, i. e., the metals go into solution or other metals remain undissolved but that at the cathode a highly pure copper deposit of such nature be produced as to meet the requirements and to ensure the efficiency of the method. Copper separated in spongy form requires the additional work of the reducing refusion in the flame furnace, since the copper when removed from the electrolyte bath easily converts into oxide.

According to the invention it has also been possible to separate copper at the cathode in a solid and compact form. Accordingly, a solid and compact deposit of copper will be only produced at the cathode from an ammoniacal solution of carbonate of ammonium containing copper if the copper is contained in the solution both in the bivalent and in the univalent form. It has been found that a solid copper deposit occurred if instead of cupric salt a cuprous compound, for instance, cuprous oxide was employed in the electrolyte. It was also found that for the production of solid and compact deposits it is not necessary to employ a pure cuprous salt solution but that it suffices if the electrolyte contains besides cupric salt a univalent copper salt. Thus, for instance, by the use of an ammoniacal cupric salt solution as an electrolyte, provided that during the electrolysis the electrolyte has been thoroughly stirred, copper was first deposited in a spongy to fine grained form in the case of a cathodic current density of 100 amp/$m^2$. Only when the electrolysis has been continued for some time, i. e., when cuprous copper has been produced from the cupric copper by a thorough stirring of the electrolyte the cathode deposit became more and more solid. The brown to dark red color of the deposit changed into bright red. The copper became solid and compact and could no longer be stripped.

The percentage of cuprous ions necessary for the electrolysis is maintained constant in the bath in a rather simple manner by stirring very thoroughly the electrolyte. According to the already above-mentioned reaction equation

$$Cu'' + Cu = 2Cu'$$

a sufficient amount of cuprous ions will then be always available. When circulating in operation the electrolyte, for instance, through the baths it has proved sufficient if the liquid in the electrolyte tank is renewed every hour. The speed of circulation is considerably higher than in the case of the usual cycles in which the liquid is renewed every 2½ to 3 hours. In order to prevent oxidizing influences or to maintain as high a cuprous ion concentration as possible in the bath liquid and to prevent losses of ammonia the bath is preferably poured on with oil which should not form an emulsion therewith, notwithstanding the intense agitation of the electrolyte. For instance, the pouring on of the bath with paraffin oil to a height of 1 to 2 cm proves sufficient. This covering of the bath has, however, still another important advantage in that the volatilization of ammonia is thereby prevented to a rather great extent. The losses of ammonia occurring as a result of the volatilization are so low as to be negligible and depend only upon the quantities of electrolyte which adhere to the electrodes to be removed from the bath. By suitable measures it is, however, possible to regain to a great extent these quantities of electrolyte.

For the deposit of good copper coatings it is advantageous according to the invention that the cathodic current density does not exceed 250 amp/$m^2$, otherwise the copper deposits are of a grained to spongy nature. The current densities may be chosen the higher, the higher the percentage of univalent copper in the electrolyte.

For the deposit of the copper it is advisable to choose cathodes of iron-, aluminum-sheet or of any other metal which is insoluble in the electrolyte to be used or is only soluble to a slight extent. Such sheets have the great advantage that the copper may be removed in a simple manner in thin sheets or also in plates if the cathode edges are insulated, for instance, by wooden ledges, rubber tube or the like.

Ammoniacal copper solutions which produced by dissolution of copper carbonate or copper sulfate with the aid of an exactly necessary amount of ammoniacal liquor or a slight excess thereof, for instance, with a copper content of 7 to 10 g/l normally produce a bath voltage of 3.5 to 5.0 volts. To increase the efficiency of the method according to the invention as low a bath voltage as possible is essential. Thus by adding suitable carbonates it is possible to reduce the bath voltage considerably, which is very important for treating plated metals. A solution which, for instance, contains

| | g/l |
|---|---|
| Cu | 20 |
| $(NH_4)_2CO_3$ | 100 |
| $Na_2CO_3$ | 100 |
| Free $NH_3$ | 30 |

in the case of a distance between the cathodes of 40 cm presents a voltage of about the order of 1 volt and less. This measure proves then to be very advantageous if the relatively wide anode cages must be employed for treating plated metals, sheet strips etc.

It has been found that the electrolytic refining of copper and its alloys as well as the electrolytic treatment of copper- and copper alloy-plated

metals may be effected with a considerably higher current utilization at the cathode if the electrolysis in a solution of ammonia containing copper and ammonium carbonate and in which the copper is contained both in bivalent and univalent form has an alkali carbonate content of more than 100 g/l electrolyte.

The effect of the higher percentage of alkali carbonate may be so explained that the purely chemical redissolution of the copper already deposited on the cathode is prevented owing to the presence of alkali carbonate in the ammoniacal electrolyte, this being the more the case the higher the alkali carbonate content. The separation of the copper from plated iron is, however, effected normally the more rapid, the lesser alkali carbonate is contained in the electrolyte. In order to effect a proper electrolysis it is, however, very essential that the electrolyte continuously retain the same composition. This condition is, however, only to be fulfilled if it is feasible to render as equal as possible both the cathodic and anodic current utilization. Thus, for instance, a continuous increase of the copper content in the electrolyte occurs by an increased anodic copper dissolution in the case of an electrolysis with an anodic current utilization of 200% and a cathodic current utilization of only 35%. Such conditions as to the current utilization are present, for instance, in an electrolyte having a low percentage of alkali carbonate (about 50 g/l). By the increasing copper content considerable amounts of free ammonia and ammonium carbonate are also chemically combined in the electrolyte owing to the formation of complex copper amine salts. It follows that in the long run the electrolyte attains the maximum percentage of copper, thereby preventing completely an anodic dissolution of copper.

To remove these difficulties it is in the long run essential that the cathodic current utilization be kept as high as possible in order to approach as far as possible the anodic current utilization.

A series of tests, carried out for improving the cathodic current utilization in an electrolyte containing 20 g/l copper, 50 g/l ammonium carbonate and 30 g/l ammonia, gave the following percentage cathodic current utilization by increasing the content of carbonate of sodium:

| Addition of $Na_2CO_3$ | Cathodic current utilization in percent |
|---|---|
| 0 | 0 |
| 50 | 36.8 |
| 100 | 48.0 |
| 150 | 80.2 |
| 200 | 80.2 |

The method according to the invention may be adapted to the various requirements. Thus, for instance, when employing an electrolyte containing 200 g/l carbonate of alkali iron parts will be practically completely decoppered in the case of an anodic current utilization of about 120%. If the electrolysis is effected for a somewhat longer time in the manner just described, in which case a complete separation of copper occurs the current utilizations may be so adjusted that they are practically of the same value. Thus, for instance, with an electrolyte containing 20 g/l copper, 100 g/l carbonate of ammonium, 200 g/l carbonate of sodium and 15 g/l ammonia a cathodic current utilization of 83.11% and an anodic current utilization of 87.6% might be obtained.

It has further been found that by the addition of other metal carbonates, metal oxides or metal hydroxides soluble in the electrolyte a considerable increase in the cathodic current utilization may be attained during the electrolysis. The above-mentioned or similar compounds must be present in a form which brings about an increased tendency of free ammonia and ammonium carbonate to the formation of corresponding amine salts. Thus, for instance, the cathodic current utilization in an electrolyte containing 20 g/l copper, 100 g/l carbonate of ammonium, 100 g/l carbonate of sodium and 30 g/l ammonia might be increased by adding zinc oxide from 35.3% to 66.2%. In this case the solution contained 15 g/l zinc.

It must be noted, when adding other metal compounds besides the carbonate of alkali that in the case of a very high percentage of carbonate of alkali, such as, for instance, 200 g/l electrolyte, a further increase of the cathodic current utilization no longer occurs.

Furthermore, it has been found that the temperature of the electrolyte exerts a very considerable influence on the electrolysis. Thus it has been found that temperatures between 25 and 40° centigrade present particular advantages as to the compact deposit of copper or the production of smooth coatings. In the case of lower temperatures of the electrolyte, for instance, of about 20° centigrade, hitherto employed as a rule, it is true that solid coatings are produced which, however, present depending upon the agitation of the electrolyte more or less great excrescences (warts, long threads etc.) which fall off very easily from the cathodes and are besides a continuous danger as to the formation of short circuits.

Two electrolytic tests, in which according to the invention an alkali carbonate content of more than 100 g per liter was employed and the electrolyte temperature amounted to about 35° centigrade, gave the following current utilizations:

| | Test 1 | Test 2 |
|---|---|---|
| | *Per cent* | *Per cent* |
| Cathodic current utilization | 97.6 | 97.8 |
| Anodic current utilization | 99.1 | 100 |

The electrolyte employed in this case had the following composition:

| | g/l |
|---|---|
| Copper as sulfate of copper | 20 |
| Carbonate of ammonium | 75 |
| Carbonate of sodium | 200 |
| Ammonia | 30 |

The cathodic current density amounted to about 150 amp/$m^2$.

In the treatment of plated iron or aluminum plates the electrolysis may be exactly controlled by reference to the bath voltage; whereas at the beginning the voltage amounts to about 0.6 to 0.8 volt and during the electrolysis increases to about 1 volt, the voltage increases at the end of the electrolysis, i. e., when the coating metal is practically separated and attains values from 1.5 to 2 volts and more. If after the increase in voltage occurring at the end of the electrolysis constant voltage values are again measured, this is a sign that the coating metal, such as, for instance, cop-

per or tombac, is completely separated from the basic metal.

To produce the electrolyte suitable for the electrolysis in a simple and economic form, it has proved very suitable that a solution be employed which contains in a dissolved state the copper as cupric salt, for instance, as carbonate of copper or sulfate of copper. This solution is then intimately agitated in the electrolyte container itself or in a particular container in which copper or its alloys or also metals plated therewith are contained in a sufficient quantity so that according to the above-mentioned equation the bivalent copper is converted to the greatest extent into the univalent form. If the desired percentage of cuprous copper is attained, for instance, 10 g/l, the electrolysis is initiated, whereupon the copper separates in a solid and compact form presenting a bright red color.

*Example 1*

An alloy containing 63% Cu and 37% Zn is subjected at a cathodic current density of 100 amp/m² to the electrolysis in a solution which contains per liter

| | g/l |
|---|---|
| Cu | 20 |
| $(NH_4)_2CO_3$ | 100 |
| $Na_2CO_3$ | 100 |
| Free $NH_3$ | 30 |

The alloy to be treated which, for instance, is used in the form of strips of sheet metal is inserted into the bath in a suitable manner with the aid of iron anode cages. The electrolyte is thoroughly agitated by circulation, the speed of circulation being maintained in such a manner that the bath liquid is renewed in the electrolyte cell every hour. The bath voltage mounts from 0.7 to 0.9 volts. The copper is deposited in a solid and compact form onto the sheet iron cathodes to be employed. In the case of a relatively long duration of the electrolysis when the copper sheet has attained, for instance, a thickness of about 2 to 3 mm, the copper sheet is removed from the iron base. The copper produced shows a high purity as is the case with electrolytic copper. The electrolytic conductivity of the copper produced was the same as that of the electrolytic copper produced in a known manner during the electrolysis from a solution of sulfate of copper.

*Example 2*

Copper-plated steel iron cuttings are placed in a basket surrounded with wire gauze and then subjected to the electrolysis in the same manner as in Example 1. By maintaining the cathodic current density of $D_K$=100 amp/m² solid and com-pact copper is deposited onto the cathode plate. The bath voltage amounts at the beginning of the electrolysis from 0.7 to 0.9 volts. Only towards the end of the electrolysis if practically all copper has been deposited the voltage increases to a slight extent. At voltages from 1.5 to 2 volts the separation of the copper from the iron is terminated, thus leaving at the anode an iron free of copper.

*Example 3*

Cuttings of copper-plated aluminum sheet which is employed, for instance, in the form of strips are placed in a suitable manner in an anode cage and are subjected to the electrolysis as in instances 1 and 2. The copper separates from the aluminum and is deposited onto the cathode in a solid form. At the beginning of the electrolysis the voltage amounts to 0.6 volt. When the voltage attains a value from 1.9 to 2.0 volts the electrolysis is interrupted, since the copper has then been completely separated from the aluminum, thus leaving at the anode the aluminum sheet free from copper. The copper was deposited as in the instances 1 and 2 on iron cathodes and separated from the sheet when it attained a sufficient thickness after removing the edge insulation. Instead of iron also aluminum cathodes are employed in this case in which the removal of copper from the cathode was effected in the same manner as in the case of iron cathode plates.

In treating copper alloys, particularly plated metals, in ammoniacal lyes the solutions become gradually rich in metals besides copper contained in the alloys, for instance, zinc and nickel. If the solutions are rich in these foreign metals beyond a certain degree the copper electrolysis is impaired. While pure ammoniacal copper solutions or such poor in foreign metals produce under circumstances solid deposits the latter become under the same circumstances but with higher percentages of foreign metal more granular and brittle until finally they are converted in the case of very great amounts of impurities into a useless spongy form. To ensure a good deposit of copper it is therefore necessary to maintain the solution as pure as possible; the electrolyte must be freed of the foreign metals at given intervals in order that its percentage of impurities does not exceed the permissible maximum value.

According to the invention it is possible to precipitate in a very simple manner the foreign metals from the ammoniacal copper solution or to purify the solution to such an extent that it causes no difficulties when used again for the electrolysis. Various tests have shown that by concentrating the contaminated ammoniacal copper solution by evaporation a precipitation of foreign metals in the form of hydroxides occurs, whereas the copper remains surprisingly in solution. With an ammoniacal solution containing 20 g/l copper and 30 g/l zinc a zinc hydroxide precipitation sufficient for the operation might be attained if the solution had been concentrated by evaporation to 50% of the original quantity. Under these circumstances 65.5% of the zinc contained in the solution could be precipitated, whereas at the same time only 1.1% of the copper contained in the solution before the concentration by evaporation was converted into hydrate deposit. The relationship between the precipitation of zinc and the degree of concentration by evaporation will be apparent from the following table:

| Degree of concentration by evaporation in per cent | Decrease of the metal content in per cent referred to the metal quantity before the concentration by evaporation | | Metal contents of the dried residue in per cent | |
|---|---|---|---|---|
| | Copper | Zinc | Copper | Zinc |
| 20 | 0 | 12 | 0 | 41.1 |
| 50 | 1.1 | 65.5 | 0.2 | 37.8 |
| 60 | 17.7 | 81 | 4.1 | 34.5 |

As will be seen from the above table it is possible by properly selecting the degree of con-

centration by evaporation to precipitate to a rather great extent the zinc concentrated in the solution, while the percentage of copper remains practically constant. The ammonia volatilized during the evaporation is then regained in a particular condensation system. A complete separation of the zinc, as is required, for instance, in analytic work is not required in this connection, since it is only essential when using the electrolyte in circulation to precipitate such a great amount of foreign metal that the copper electrolysis may function without any disturbances. According to the same method also other metals besides zinc such as, for instance, nickel and cobalt which are soluble in an ammoniacal solution may be separated from the copper.

GÜNTHER HÄNSEL.

Published May 18, 1943 Serial No. 219,932

# ALIEN PROPERTY CUSTODIAN

## CIRCUIT BREAKER

Fritz Kesselring, Berlin - Frohnau, Friedrich Gieffers, Berlin-Charlottenburg, Werner Kaufmann, Berlin-Siemensstadt, Germany; vested in the Alien Property Custodian

Application filed July 18, 1938

The present invention relates to improvements in high-capacity circuit breakers operating with an extinguishing fluid and ensuring the interruption of the circuit with the smallest possible number of means. According to the invention a fluid flowing in parallel relation to the axis of the arc is employed for extinguishing the same. The fluid is suddenly caused to flow by the use of a control device which may be operated in response to the distance or still better to the pressure and is so guided that it encloses the arc and the gas envelope surrounding under circumstances the arc. A conducting and in general a non-inflammable liquid is employed to advantage as an extinguishing liquid. Alcohols having slight amounts of water, particularly multivalent alcohols, such as glycol, glycerin, erythrite, mannite and the like have proved particularly effective as extinguishing liquids. Particularly favorable conditions are obtained, for instance, in an extinguishing liquid consisting of 80 to 60% glycol mixed with 20 or 40% water. Besides the abovementioned very favorable extinguishing properties this liquid has the further advantage that the solidifying point lies at about −60 to −80° and that the dissolving power as compared to water is very slight so that the conductivity is not practically varied. Furthermore, the viscosity is far less dependent upon the temperatures than is, for instance, the case with oil.

In the accompanying drawings are shown some embodiments of the invention in diagrammatic form.

In Fig. 1, 1 denotes a liquid container in which is placed a chamber 2 which at the botom 3 is provided with an aperture 4 for the passage of the contact rod 5. The chamber 2 is provided with a partition wall 6 through a hole 7 of which the contact rod 5 passes without the slightest clearance. An inverted cup-like counter-contact 8 cooperates with the contact rod. The counter-contact may be either firmly arranged below the aperture 4 at a suitable distance or it may be pressed according to another form of the invention by a spring 9 against the opening 4 so that it practically closes the aperture temporarily and permits the flow of the liquid therethrough only when the pressure produced by the arc has exceeded a certain value.

By the pressure of the gas bubbles produced by the arc the liquid flows out of the lower chamber aperture, in which case the gas may be deviated by guiding members so that the arc is restricted by a liquid or gas sleeve and is thereby extinguished.

Another form of the invention is shown in Fig. 2. The chamber consisting of insulating material is in this case provided with an opening at the upper part thereof and contains besides the stationary counter-contact 7 an intermediate contact 9 which is guided within the chamber, a sufficient intermediate space for the circulation of the liquid being left free at the sides. The intermediate contact which may, under circumstances, be, furthermore, under the influence of springs 11 is at first entrained through friction by the contact rod 5 so that an auxiliary arc is ignited between the contact 8 and the intermediate contact 9, which arc supports the circulation of the liquid. As soon as the intermediate contact has attained a limit determined by the stops 12 the contact rod is separated therefrom, in which case the main arc is ignited in the neighborhood of the chamber aperture and is constricted by a liquid or gas sleeve owing to the liquid circulation caused by the auxiliary arc and is thereby extinguished. Under circumstances a discharge chamber may be formed adjacent to the switch chamber by an additional wall 13 through which the contact rod passes without the slightest clearance, which discharge chamber communicates with the outer liquid chamber either through small holes 14 or valves 15 or both, thus causing an increase in pressure so that the switching operation is effected under super-atmospheric pressure and therefore under particularly favorable conditions.

A further form of the invention is shown in Fig. 3. In this case a switch chamber 2 having also at the upper part thereof an opening is employed within a liquid container 1. The switch chamber is subdivided by a stationary partition wall 16 having in the central portion thereof an opening 17 for the passage of the contact rod 5, which aperture may be closed by a metal flap 18. Furthermore, lateral holes 19 are provided. During the switching operation an arc which remains between the metal flap and the stationary contact and leads from the metal flap to the contact rod is at first struck between the two centacts. Owing to the pressure produced at the lower portion of the arc and which cannot be reduced as a result of the aperture being closed by the flap, the liquid is forced through the lateral holes 19 and flows out through the switch chamber opening so that a flow of liquid or gas constricting the arc is produced by means of which the arc is extinguished.

This form of the invention shows a further possibility of operating the circuit breaker under super-atmospheric pressure by connecting a pressure bottle 20—which, for instance, may be filled up with carbonic acid, nitrogen or the like—to the sealed switch chamber, by means of which bottle a great pressure influencing in addition the pressure conditions within the chamber is exerted on the liquid level.

A form of the invention with a differential piston is shown in Fig. 4. Within the switch chamber 2 is arranged the differential piston 21 which

is located in a stuffing box 22 in such a manner that its smaller piston surface lies at the upper part and its larger piston surface at the lower part thereof. When interrupting the circuit an increased pressure is brought about by the arc causing an upward movement of the piston against the force of the springs 23 owing to the difference between the piston surfaces, by which upward movement the extinguishing liquid flows from the space formed in the upper part of the chamber and practically closed by the contact rod into the lower space through the piston by means of a central piston aperture 23, thereby constricting and extinguishing the arc drawn through this aperture.

The invention is not limited to the forms shown; instead of a differential piston a pressure may also be produced by a system of levers or in another manner. For instance, an explosive substance may be brought to ignition, thus imparting to the liquid the necessary circulation. It is also possible to drive the movement of the piston directly from the contact rod it being essential that a rapid flow of liquid through the switch chamber aperture through which the arc is drawn be caused as a result of the movement of the piston.

The liquid level is chosen preferably very high as will be seen from the drawings.

The novel circuit breaker prevents with certainty any fire risk and ensures an extinction of the arc within very small distances between the contacts. In this manner it is possible to design a switch employing the liquid according to the invention smaller than has hitherto been possible, thus ensuring a considerable saving in raw materials and a reduction of the cost of manufacture.

This arrangement may be still improved in the manner that the circuit breaker is designed in the form of a liquid container which is subdivided by a partition wall into an upper discharge chamber and a lower pressure chamber. In this case the intermediate contact is moved at the upper end of the pressure chamber against the force of a spring in such a manner that it may follow all movements caused by the contact rod.

In this case it is particularly advantageous to arrange in the upper space an inner chamber interrupted by lateral escape orifices and into which flows the liquid.

According to the invention this inner chamber together with the opening—forming the guide nozzle for the liquid circulation—may be elastically supported in such a manner that it is movable with respect to the partition wall and when moved opens lateral escape orifices which form a by-pass for the nozzle and the inner chamber.

Such an embodiment of the invention is shown in Fig. 5. 1 denotes the liquid container which consists substantially of a metallic cover *f* and an insulating cylinder *z*. The lower end of the insulating cylinder is closed by a metal cap *k* carrying the stationary counter-contact 8 designed in the form of an inverted cup. The movable intermediate contact 9 designed as a contact rod is guided in the lower portion of the cylinder by a frame *r* and is supported by a spring 11. The highest position of the intermediate contact is determined by the fact that the plate *r* comes into engagement with the intermediate wall 16 which subdivides the container into an upper space (discharge space) and a lower space (pressure space). The intermediate wall has the form of a conical valve seat. On this seat rests a mouth piece *m* shaped in a similar manner having in the central portion thereof an aperture 17 for the passage of the contact rod 5, the opening 17 serving as a guide nozzle for the flow of liquid. This mouth piece is in turn associated with another cylinder *i* of insulating material enclosing an inner chamber which in turn communicates with the upper part of the container through lateral holes. Between the cover *f* and the upper end of the cylinder *i* is arranged a rubber ring *g*.

When closed the intermediate contact 9 is pressed into the counter-contact 8 by means of the contact rod 5 so that the current path is closed. When interrupting the circuit the contact rod 5 is moved in the upward direction, the intermediate contact 9 following the rod under the influence of the spring 11 so that an auxiliary arc is ignited between the lower end of the intermediate contact and the stationary contact. By means of the auxiliary arc the extinguishing liquid surrounding the same is partly evaporated, thereby causing a great pressure resulting in an axial flow of liquid through the escape orifices. As soon as the intermediate contact has reached its uppermost position the main arc is drawn between the intermediate contact and the contact rod through the same escape orifice so that this arc is restricted by a concentric flow of liquid and is thereby extinguished under the most favorable conditions. If in the case of relatively high currents the pressure in the pressure chamber should assume an extremely high value the inner chamber is raised by the pressure exerted on the mouth piece *m*, thus uncovering an escape orifice between the intermediate plate 16 and the mouth piece *m*, through which orifice occurs a certain relief of pressure. Owing to the pressure-responsive control of the orifices this additional orifice is kept so small that at all events a sufficient flow of liquid takes place through the orifice 17, thus ensuring the extinction of the arc.

In this form of the invention a very simple construction is obtained, since the necessary insulation between the upper and the lower part of the circuit breaker is offered by the insulating cylinder *z*. In this case it is possible to move the contact rod 5 to a further extent so as to attain an additional gap if desired. Under circumstances an additional gap may also be arranged at another point in series with the above-mentioned contacts at which the circuit is broken, whereby the arc is extinguished. The metal parts are connected to advantage to the insulating parts by turning out in both parts corresponding grooves which are filled up with a solidifying body of a metal having a low fusing point or with pressed material.

The invention is not limited to the embodiment shown. Under circumstances a valve for the equalization of the pressure which connects the pressure chamber at a suitable point with the discharge chamber lying thereabove may, for instance, be employed instead of the resilient arrangement of intermediate plates and of an inner cylinder movable with respect to each other. The intermediate contact may also be designed in the form of an inverted cup, the counter-contact having then the form of a contact rod. The inverted cup then encloses at the upper end as well as at the lower end thereof a contact rod. In this manner particular current supply leads to the single segments of the contact in the form of an inverted cup are not necessary, which implies a further advantage. The upper and lower

half of the contact may, if desired, be so closed with respect to each other as to be liquid-tight.

This improvement presents under circumstances considerable advantages even when using insulating extinguishing liquids or the like.

Instead of providing an inner chamber above the intermediate wall it is also possible to close the upper part of the pressure chamber by a cover which is resiliently supported. Such a arrangement may also be employed besides the inner chamber. The resilient support of the cover as well as of the inner chamber need not only be effected by a rubber ring but by any other resilient means, for instance, also by springs. The resilient members are arranged to advantage in such a manner that they lie outside the range of the hot gases and therefore are not impaired by repeated switching operations. It is particularly advantageous to design the upper contact as a pressure contact and the lower contact in the form of an inverted cup, in which case a greater contact pressure may be ensured on the upper contact by the spring (11). The spring itself may be insulated with respect to the lower fixed contact and under circumstances with respect to the intermediate contact. It may be particularly convenient to arrange the additional escape orifices (valve ring) as near as possible to the nozzle in order that the flow of liquid or vapor upon the operation of the valve is deviated or disturbed as little as possible.

According to the invention a further considerable improvement may be obtained in high-capacity circuit breakers of the above-indicated character by limiting the separation of the main contacts to the most favorable distance of extinction, which may be easily determined for any type of circuit breakers. In this case it is possible to separate the auxiliary contacts which ignite auxiliary arcs lying in series with the main arc to such an extent that a sufficient gap free of surface leakage path, if desired, is created.

By such an arrangement the performance of the arc and therefore the ionization of the main arc is kept very small as compared to the arrangements hitherto known so that the current may be interrupted with certainty.

A switch chamber may be allotted to advantage to each of the two arc paths the pressure produced on the auxiliary arc setting into motion an extinguishing medium which is guided in a nozzle-like device to the main switching gap.

In the case of such a nozzle-like design the movement of at least one of the two electrodes which are allotted to the main switching gap is controlled in such a manner that the latter is spaced a distance from the nozzle during the interruption at which the blow-out effect of the nozzle is most efficacious.

With such an arrangement it is under circumstances possible to continue the movement of the other electrode even beyond the so-called optimum distance between the contacts without impairing the blow-out effect.

A particularly favorable form for a circuit breaker according to the invention may be obtained by providing one or both of the switch chambers allotted to the two arc paths with pressure-responsive resilient elements so that in the case of excessive interrupting capacities the chamber is not destroyed.

In this case the closure of the lower chamber may be effected by the contact itself substantially in the manner that the latter closes the opening as a pressure contact. Under circumstances it may, however, also be advantageous to design the chamber in the form of a so-called resilient chamber. In this case it is possible to cause an extinction of the arc with relatively low currents with the aid of pressure-responsive escape orifices provided for both chambers owing to the relief of pressure occurring upon the uncovering of these orifices in the sense of the so-called expansion circuit breaker. This represents a valuable improvement insofar as with a relatively low current the flow of the extinguishing medium caused by the auxiliary arc is under circumstances not sufficiently strong to ensure the extinction of the arc. In this manner the further advantage is obtained in that during the extinction a static pressure is maintained, whereby comparatively high voltages may be controlled or a smaller extinguishing distance may be chosen for a given voltage.

Fig. 6 shows such an embodiment. 1 denotes an insulating casing which is constricted in the upper part in the form of a switching chamber the central portion of which being provided with an opening 2 for the passage of the movable contact rod 3. Within the switch chamber is arranged an intermediate wall 4 carrying a movable intermediate contact 5. The intermediate wall 4 is pressed in the upward direction by a spring 6. The casing 1 is associated with a chamber-like casing 8 in which is placed the stationary contact 9 through an insulating plate 7 with a passage for the intermediate contact 5. The parts 1, 7 and 8 may be secured either rigidly to one another by fastening means 10; however, by the use of resilient means the single parts may be caused to separate from one another in response to pressure in the form of an elastic chamber of an expansion circuit breaker. In the intermediate plate 4 are provided lateral apertures 11 which ensure a passage of the extinguishing medium. The movement of the intermediate plate in the upward direction is limited by stops 12 to an amount for which the most favorable extinguishing distance exists between the contact 5 and the counter-contact 9.

When switching-in the circuit breaker, the contact rod 3 strikes the upper end of the intermediate contact 5 in the form of a pressure contact and entrains the intermediate contact and presses it into the contact 9 designed substantially in the form of an inverted cup.

When interrupting the circuit the movable contact rod 3 moves in the upward direction. In this case the contact 5 follows under the action of the spring 6 so that the contacts 5 and 9 are separated from each other, thus striking the main arc across the same. However, at the same time at least at the moment at which the stop 12 is reached also the contacts 3 and 5 are separated across which is ignited the auxiliary arc. In this manner the extinguishing liquid introduced in to the switch chamber closed by the counter contact 9 (for instance, by the resilient member) evaporates, thereby producing a pressure. Under the influence of this pressure the contact 9 moves in the downward direction and uncovers the opening of the plates 7 so that by the pressure of the auxiliary arc the extinguishing liquid begins to flow surrounding completely and restricting the main arc ignited between the contacts 5 and 9. By this flow of the extinguishing medium an extinction of the arc is ensured, since the best extinguishing conditions are attained by the favorable distance between the contacts 5 and 9 and since as above mentioned

the quenching conditions are under circumstances furthermore favorably influenced by a static super-atmospheric pressure. The contact rod 3 moves in the meantime out of the chamber 1 so that a switching gap free of surface leakage path and having a length depending upon the operating voltage and the conductivity of the extinguishing medium is obtained.

Another form of the invention is shown in Fig. 7. In this figure 1 denotes a chamber-like casing within which an intermediate plate 4 is moved in the upward direction by a pressure spring 6. The intermediate plate is provided with an intermediate contact 5 which comes into engagement with a stationary contact 9; the latter is arranged in the lower part of the casing 1. Above the intermediate contact 5 is arranged a partition wall 7 integral with the casing 1, the wall 7 having in the central portion thereof a nozzle-like aperture for the passage of the movable contact rod 3. In this case the position of the plate is so chosen that in the uppermost position of the intermediate contact 5 determined by the stops 12 such a distance exists between the nozzle and the intermediate contact as to give the nozzle the most favorable blow-out effect.

The casing is closed by an intermediate wall 12 arranged above the wall 7 so as to form a chamber, in which wall 13 a ring rests on a conical valve-like seat which is pressed into the closed position by a spring 15. In this manner the casing forms an elastic chamber which upon exceeding a given pressure is opened by the upward movement of the valve ring 14.

When breaking the circuit the contact 5 follows the contact rod 3 under the action of the spring 6 till it reaches the stops 12; i. e. till the contact is in the most favorable extinguishing position with respect to the nozzle, in which case the auxiliary arc is struck between the contacts 5 and 9. Upon the further movement of the contact rod 3 the latter separates from the intermediate contact 5 and draws the main arc through the nozzle through which at the same time the fluid flows under the effect of the already ignited auxiliary arc, thus extinguishing the arc. If with small current intensities an extinction of the arc does not occur in this manner a sudden relief of pressure is initiated by the lifting of the valve ring 14 or by the removal of the rod 3 out of the upper chamber aperture so that an interruption of the arc occurs as is the case with expansion circuit breakers.

In this arrangement a hollow contact rod is employed to advantage which when its point passes through the nozzle plate 7 establishes a connection with the atmosphere through its bore 16 and the opening 17, thereby facilitating the escape of the gases. Under circumstances it is possible to establish a contact between the contacts 5 and 9 in the form of pressure contacts, thus ensuring through the elastic pressure, for instance, caused by springs, a pressure between the contacts as well as the closure of the lower chamber aperture. Not only a conducting liquid but also either oil or a non-inflammable insulating liquid may under circumstances be also employed as an arc extinguishing liquid.

In the case of the circuit breaker types so far described the extinguishing liquid is intensely heated by the arc and evaporated at least partially, thereby causing a considerable increase in pressure. In this case the increase in pressure is at least partially dependent upon the corresponding current to be interrupted. This increase in pressure also acts on the contacts moving away from each other—depending upon the direction of motion—either in the sense of an acceleration or also under circumstances of a retardation. Consequently, the speed of switch action which is brought about by outer mechanical means, gears, slackening of springs or the like will differ considerable depending upon the intensity of current at which the interruption occurs. However, this has great drawbacks, since in case of an additional acceleration at high intensities of current the speed of motion becomes much greater, thereby also increasing materially the distance between the contacts up to the moment of the interruption of current. In this manner also the power of the arc is considerably increased so that the extinguishing conditions are impaired to a great extent. If the pressure acts in the sense of a retardation of the contact motion, the pressure may become so great that the necessary minimum distance between the contacts is attained very late, thus also complicating or preventing the interruption.

According to a further improvement this drawback may be removed by the fact that a second constructional element of approximately the same surface is arranged in the switch chamber close to the movable contact rod, which element is so coupled to the contact rod as to move in opposite direction. Thus the influence of pressure on the motion of the contact rod is completely eliminated. In this case a further advantage is obtained in that any decrease in volume within the switch chamber is avoided by the contact movement which, particularly in the case of a comparatively small switch chamber and when carrying out switching operations at a low current intensity is of advantage, insofar as the pressure developed by the formation of the arc is utilized to the full extent.

The above-described form of the invention is shown in Fig. 8. 1 is the switch chamber of a circuit breaker in which a contact rod 2 cooperates with a counter-contact 3. 4 denotes a plunger, for instance, of insulating material which is guided in a bore 5 communicating with the switch chamber. The contact rod and the plunger are so coupled with each other through a system of levers 7 as to move in opposite direction.

In this improvement it is not so important in which manner the movement of the parts in opposite direction is brought about. Also gear racks, gear wheels and similar transmission members may under circumstances be employed. It is also possible to give the contact rod and the compensating member a different cross-section and to compensate the difference in cross-section by a corresponding transmission of the movement (lever arm).

Also in the case of other circuit breaker types, such as pressure gas circuit breakers, oil circuit breakers in which the pressure caused by the arc may act on the movable circuit breaker part in the sense of an acceleration or retardation considerable advantages may be obtained according to the invention.

FRITZ KESSELRING.
FRIEDRICH GIEFFERS.
WERNER KAUFMANN.

PUBLISHED
MAY 18, 1943.
BY A. P. C.

F. KESSELRING ET AL
CIRCUIT BREAKERS
Filed July 18, 1938

Serial No.
219,932
3 Sheets-Sheet 1

Fig. 1

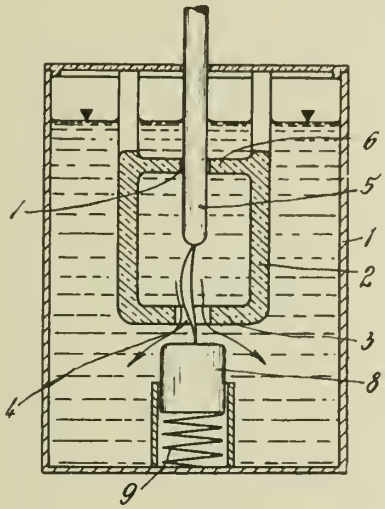


Fig. 2

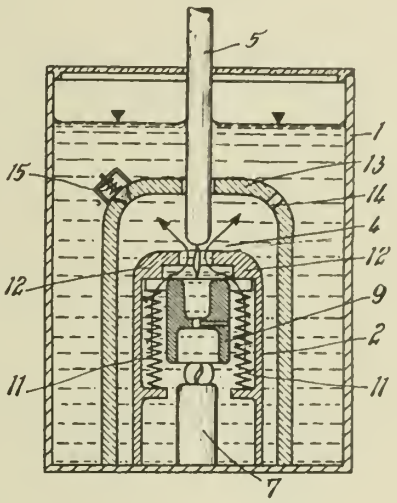


Fig. 3

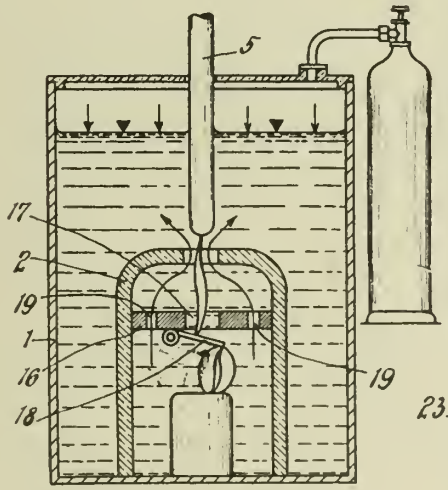


Fig. 4

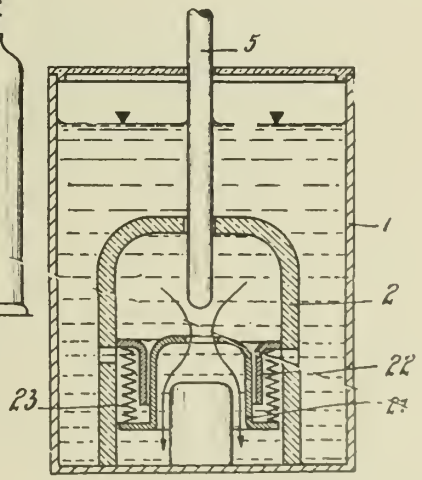


Inventors
Fritz Kesselring,
Friedrich Griffel, and
Werner Kaufmann
By Knight Bros
their attorneys

PUBLISHED
MAY 18, 1943.
BY A. P. C.

F. KESSELRING ET AL
CIRCUIT BREAKERS
Filed July 18, 1938

Serial No.
219,932
3 Sheets-Sheet 2

Fig. 5

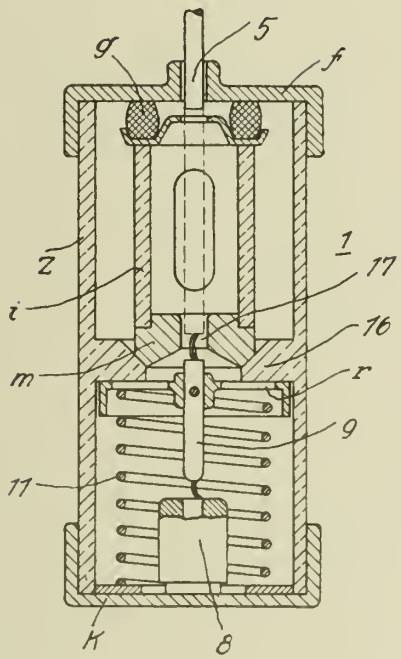


Fig. 8

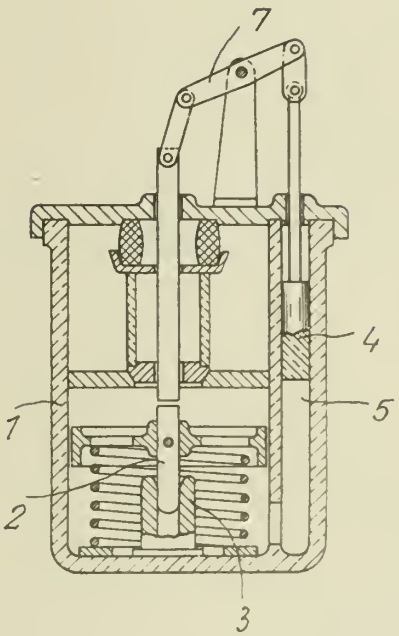


Inventors
Fritz Kesselring,
Friedrich Sieffers, and
Werner Kaufmann
By Knight Bros
Their Attorneys

PUBLISHED
MAY 18, 1943.
BY A. P. C.

F. KESSELRING ET AL
CIRCUIT BREAKERS
Filed July 18, 1938

Serial No.
219,932
3 Sheets-Sheet 3

Fig. 7

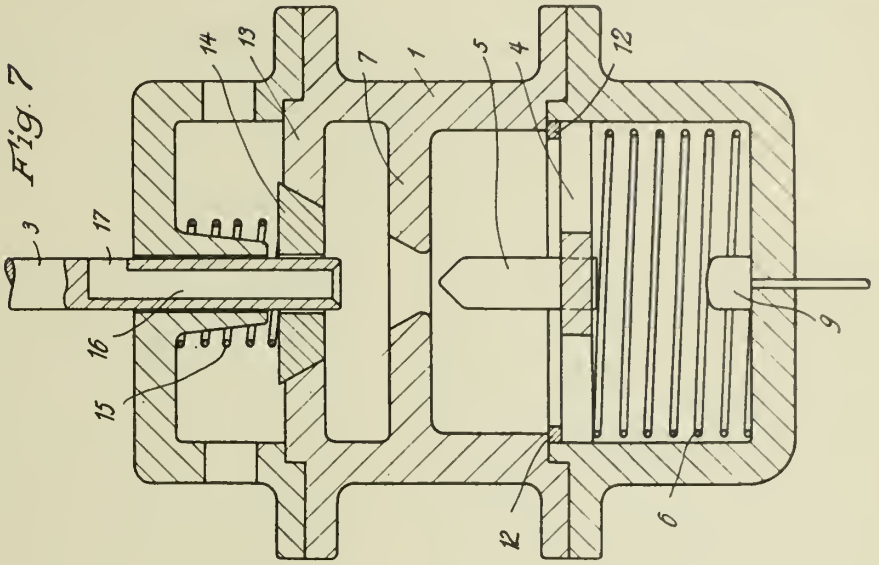


Fig. 6

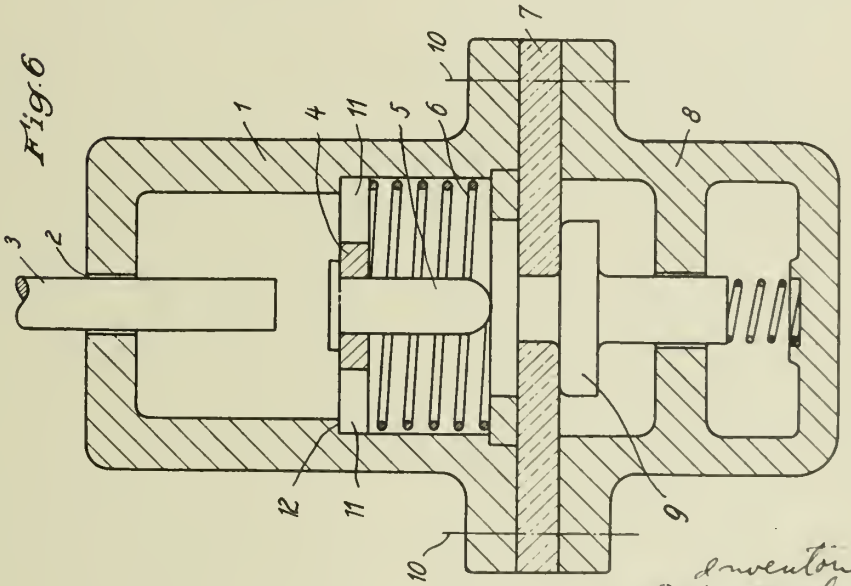


Inventors
Fritz Kesselring,
Friedrich Sieffert, and
Werner Kaufmann
By Knight Bros
Their Attorneys

Published May 18, 1943 Serial No. 222,758

# ALIEN PROPERTY CUSTODIAN

## METHOD FOR MANUFACTURING PERMANENT MAGNET BODIES

Hans Neumann, Berlin-Siemensstadt, and Hans Edler, Nurnberg, Germany; vested in the Alien Property Custodian

No Drawing. Application filed August 3, 1938

The present invention relates to a permanent magnet which is manufactured according to an entirely new method. While it has hitherto been customary to manufacture permanent magnets in massive shapes by casting or pressing it is proposed according to the invention to manufacture permanent magnets of wires, sheets or bands. It is evident that only such alloys may be employed for this purpose as may be drawn into wires or rolled into sheets or bands, i. e., alloys which are easily machineable. To this end, iron-nickel-copper-alloys are particularly suitable which are characterized by high permanent-magnetic properties.

For instance, a permanent magnet may consist according to the invention of a bundle of wires or of stampings.

Such permanent magnets have proved particularly advantageous which consist of wires or bands wound in the form of roll type bodies. When manufacturing permanent magnets the wires or bands are first wound into the desired shape and the roll type body thus obtained is then splitted, for instance, by a saw in such a manner that an air-gap results and is held together before or after giving it the desired shape, for instance, by surrounding it with an insulating layer of bakelite with the aid of the well-known spraying method or the method by immersion.

Another possibility to maintain the shape of the splitted roll type body consists in soldering or welding it at some points.

The invention presents the advantage that the permanent magnets may be easily manufactured so that it is therefore possible to obtain complicated shapes without any difficulties with the method according to the invention. Furthermore, the roll type bodies are characterized by a high magnetic quality coefficient and small eddy current losses. To reduce as far as possible the eddy current losses the wires or bands may be electrically insulated from each other according to a known method; for instance, by varnishing the same. For instance, it is known that the magnetic quality coefficients of iron-nickel-copper-alloys which have hitherto been employed only in the form of single wires or bands for permanent-magnetic purposes increase with increasing degree of deformation when rolled and heated in a given manner, so that it is preferable to roll the wires or bands to the smallest possible thickness.

The permanent magnets according to the invention may be employed to advantage in all cases where the known cast or pressed permanent magnets have hitherto been employed. They are particularly suitable in the form of cylinder magnets; for instance, of pot-shaped magnets for loudspeaker systems.

It has been found that those magnets which are not surrounded by an insulating layer, but soldered or welded at some points possess somewhat movable limbs so that the air gap can be made variable. This property may be utilized, for instance, for compensating the temperature of the magnet by means of an alloy having a high thermal coefficient of expansion, for instance, also with the aid of a bimetallic spring; furthermore, it may serve to adjust the magnet to a given value of the air gap induction. If such a body may be adjusted by means of a screw or a lever device it is particularly suitable as a continuously and under circumstances as a periodically regulable magnet for meters and other measuring instruments. In this manner it is possible to obtain a very fine adjustment of the system hitherto unattainable. In contradistinction thereto, the known types of magnets with a continuously controllable air gap in which rigid limbs had to be employed whose air gap was regulated by the use of a joint have not only the disadvantage of the complicated construction but also their magnetic properties are by far less constant.

HANS NEUMANN.
HANS EDLER.

Published May 18, 1943 Serial No. 222,943

# ALIEN PROPERTY CUSTODIAN

## ELECTRIC WIRES AND METHOD OF MAKING THE SAME

Jean Lepetit, Clichy, France; vested in the Alien Property Custodian

Application filed August 3, 1938

This application is a continuation-in-part of application Serial No. 65,526 filed February 24, 1936. The present invention is directed to a new and improved electric wire.

An object of the invention is to provide an electric wire of that type having a conducting core, a refractory insulation and an external metallic sheath or sheathing wherein the metals or alloys of the core and sheathing may have somewhat different characteristics.

A further object of the invention is to develop an electric wire by drawing or rolling a workpiece to substantially a length ten to twenty times the initial length of such workpiece.

A further object of the invention is to provide a method of drawing a workpiece whereby the metallic elements of the wire are not oxidizable at the annealing temperature in the presence of air.

A further object of the invention is to provide a refractory homogeneous layer between the sheath and the core which is in such a state of compactness that the drawing stresses and strains will be transmitted therethrough so as to draw the core element at the same time and rate as the sheath element. In other words the construction is such that the sheath, refractory insulation and core will act during a major part of the drawing operation as an integral bar.

It is a still further object of the invention to devise means whereby it is possible to draw or roll a workpiece comprising a core, a sheath and a refractory insulation such as magnesia under satisfactory conditions wherein the core and the sheath are constructed from different metals, alloys or from the same metal having different characteristics.

It is a further object of the invention to devise a method of treating a workpiece of the character indicated whereby there is secured an identical lengthening of the core, of the insulating layer and of the sheath. With the above and other objects in view which will become apparent from the detailed description below the invention is shown in the drawing in which,

Figure 1 is a partial longitudinal cross section through a wire constructed in accordance with the invention and

Figure 2 is a cross sectional view through the wire of the invention.

In the drawing the sheath is indicated at 10, which is seamless and the core is indicated at 11. Encircling the core and located between the core and the interior surface of the sheath is the insulating material 12.

In wires of the type of the present invention the external sheath has heretofore been formed of the same metal as the core, i. e. of copper. As a result, and among other disadvantages, the weight of the wires was considerable. Furthermore when attempts have been made to construct wires of the type indicated in which different metals were used then difficulties arose during the annealing and drawing operations causing various defects generally bursting of the sheath. According to the present invention electric wires may be constructed having an external sheath of aluminium, aluminium alloys or other light metals or alloys. For instance, magnesium or alloys containing magnesium may be used.

It has also been ascertained that the use of aluminium or its alloys permits one to use relatively low temperatures for the annealing and due to the use of such low temperatures the metal or its alloys is practically unoxidizable. This feature which has been discovered permits proceeding directly with the drawing after the annealing and particularly without any intermediate pickling. Furthermore corrosion due to chemical agents is extremely reduced and far lighter electric wires obtained.

In accordance with the invention it is possible to use for the core of the wires the metal or alloy which is used in the sheath but whose characteristics are different therefrom. For instance, if aluminium or its alloys are used in the sheath then it might be advantageous to use the same metal or alloy in the core but such metal or alloy as used in the core having a greater hardness or a higher or lower resistivity. Also, for instance, it may be possible to use resistance wires, which are generally alloys in the core, or instead of such wires which are used for transforming energy to heat, one may use wires having a high conducting capacity such as copper wires.

A major difficulty overcome by the invention has been in annealing simultaneously during the metallurgical treatments the different metals or alloys or metal of different characteristics forming the core and the sheath in order to overcome the hardening due to drawing and particularly to anneal the core at higher temperatures than the sheath in order to meet the conditions imposed by the cycle of temperatures most convenient for the core and the sheath.

The following method permits overcoming the above described difficulty. Such method consists in heating the core and the sheath to different annealing temperatures by supplying to the core a heat current of convenient intensity and with

or without any external heating of the wire. Cooling may be resorted to for controlling the temperature of the sheath.

The wire may, for instance, be subjected to annealing by using an external source of heat. By taking proper steps the temperature will rapidly be equalized between the core and the sheath owing to the high thermal conductivity of the compressed insulation.

The temperature of the core is then raised the proper additional amount by supplying it with an electric current whose value is so chosen that the equilibrium of the temperatures of the core and of the sheath will be reached under such conditions that each of the elements forming the workpiece will be brought exactly to its most convenient and practical temperature for annealing.

By proceeding as above indicated it has been possible to obtain wires having new features and having also the properties such as absolute tightness, high insulating resistances, perfect incombustibility and high mechanical resistances but which are exactly fixed and unalterable. In addition it is possible to secure a wire having a conductibility with reference to its length per linear foot which is higher in value than that heretofore obtained and also to secure a wire having a remarkable flexibility whereby the wire may follow the outline of any objects over which it may be arranged.

Therefore a wire having a core of red copper with a diameter of 1.6 millimeters having a kilometric resistance of 8.2 ohms with about 1.5 millimeters thickness of insulation and an aluminium external sheath of about 0.75 millimeter thickness will only have a weight of 75 grs. per meter.

The invention therefore comprises as a new industrial product electric wires or workpieces having the core or cores or sheaths of metals or alloys of metals or of the same metal or alloys with different characteristics. Workpieces may be used in which the core is either made of the same aluminium or alloy thereof as the sheath or of a different aluminium or alloy or of a metal having a higher mechanical strength or a higher or lower resistivity. As is obvious numerous metals and alloys are suitable for both the cores and the sheaths and the distinctive feature of the present invention is the method whereby the metal or alloys of different characteristics are utilized in the making of an electric wire.

As a finished product the invention comprises wires obtained from workpieces which may be constituted as follows. The external sheath may be of aluminium or an aluminium alloy. The dielectric material may be formed by a pulverulent refractory insulation under a high state of compactness and which is homogeneous and isotropic. The core may be of the same metal or alloy as the sheath or of a different metal or alloy. The core may be formed from an aluminium having different characteristics from the aluminium used in the sheath or may be formed from another metal or alloy thereof having a higher mechanical resistance. The core may be formed from another metal or alloy having higher resistivity or a lower resistivity such as red copper. Due to the invention the weight of the wire per mho. km. is lower than the weight of the same type of insulated wires heretofore obtained.

The annealing for the core and the sheath is performed by using in combination a heating for the sheath and a heating current for the core which current is regulated according to the particular metals or metal alloys used. Furthermore the core may be heated while the sheath is cooled by any desired means. As a general rule if the cores are of copper the annealing temperature of such cores should not exceed 600° C. while if the sheath is of aluminium then the annealing temperature for such a sheath should not exceed 300° C. By maintaining the sheath below such temperature, if aluminium is used, it is possible to prevent any oxidizing of the aluminium and thereby eliminate pickling.

In the manufacture of the electric wires described above the workpiece is generally a continuous seamless tube several meters in length and in which is arranged a metal core or cores. About the core or cores there is placed magnesium oxide which is preferably completely dehydrated. The internal pulverulent insulating material is as above stated completely dehydrated before the metallurgical treatment and as more specifically described in the copending application Heilmann Serial No. 12,497 filed March 22, 1935, such material is preferably inserted in the form of blocks in a state of high compactness. Thereafter the workpiece is subjected to a drawing treatment in successive steps with intermediate annealing in order to obtain an elongation which may reach and even exceed 18 to 20 times the initial length.

Heretofore the core and the sheath were both of copper since such metal complied particularly well with the drawing treatments. As is well known, an identical elongation was thus obtained with homothetical reductions in section of all the elements constituting the workpiece.

The temperature to which the sheath and the temperature to which the core is brought depends particularly upon the particular metal or metal alloys which are used to form such core or cores or sheaths. For instance, the figures given above apply to a copper core and an aluminium sheath but if the sheath is of a different metal or an alloy and the core is of a different metal or an alloy then in such case the annealing temperatures will vary from the figures above given. The present invention is more particularly directed to the usual situation where the core has to be raised to an annealing temperature which is above the annealing temperature of the sheath or a temperature which is equal thereto. However by the procedure above outlined it is possible to control exactly the desired temperatures required in both the sheath and the core or cores. In the making of electric wires according to this process in order that the core and the sheath should be elongated at the same rate it is essential that the insulating material should reach a state of practical incompressibility as soon as possible. It is for this reason that the magnesia or other dehydrated pulverulent material is inserted in the workpiece prior to the drawing with the greatest compactness possible. Then during the drawing operation the workpiece will almost from the beginning act in the same manner as a solid bar of metal.

JEAN LEPETIT.

PUBLISHED
MAY 18, 1943.
BY A. P. C.

J. LEPETIT

ELECTRIC WIRES AND METHOD OF MAKING SAME

Filed Aug. 3, 1938

Serial No.
222,943

Fig. 1

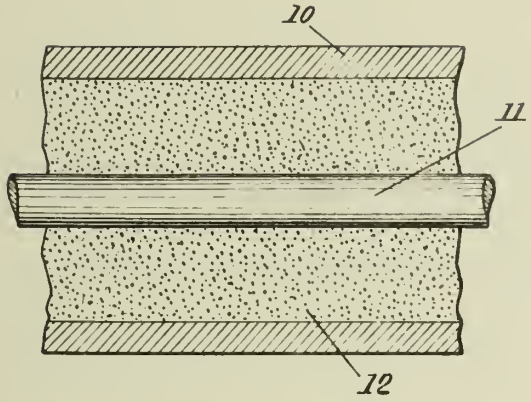


Fig. 2

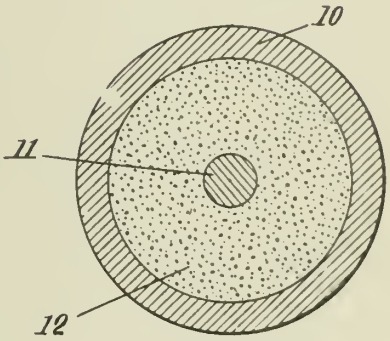


INVENTOR
Jean Lepetit

By E. F. Wendroth
ATTORNEY

Published May 18, 1943 Serial No. 223,270

# ALIEN PROPERTY CUSTODIAN

## TELEVISION METHOD AND ARRANGEMENT FOR CARRYING OUT THE SAME

Hanns-Heinz Wolff, Berlin, Germany; vested in the Alien Property Custodian

Application filed August 5, 1938

It has already been proposed to make use of the "storage principle", the application of which more particularly to the transmission end has recently become widely known (compare, for example, the ikonoscope), also at the receiving end, i. e. to produce received television images in such fashion that a plurality of image points, for example an entire line, or preferably even the entire image, are visible simultaneously.

The proposals made in this connection had the object of increasing the light intensity of the received television image.

The present invention relates to a television method of this nature with storage at the receiving end, and is based on the new recognition that by storage of the light impressions at the receiving end the tendency of the image to flicker is reduced. In this connection it is to be observed that in television receiving apparatus of this nature a darkening of the entire image field at times is wholly eliminated, so that television receiving means of this character, from the point of view of elimination of the flickering, possess even more favourable characteristics than a normal film. It is known that the darkening action, which is necessary in cinematograph films after $\frac{1}{24}$ sec. for the advance of the film, would lead to a flickering effect if a remedy had not been obtained by the fact that between each two unavoidable darkening actions of this kind there is included an additional darkening action, so that there are 48 darkening actions per second. It has been usual heretofore to assume that requirements of this nature require to be applied automatically to television receivers, since the characteristic properties of television receivers, from the point of view of freedom from flickering effect, have been considered fundamentally as more unfavourable than those of a cinematograph film, in which at least each single picture is projected fundamentally in its entirety. The position is different, however, in the case of television receivers operating with storage of the light impression, particularly if the storage takes place over an entire image period. In receivers of this kind the image excitation of each single element of the picture endures for such time until it has been replaced by a different image excitation. Fundamentally, a complete darkening of the image field, such as is unavoidable in a cinematograph film, does not occur in television receivers of this nature.

It has also been assumed that 24 image changes per second are necessary so that movements will not be blurred upon the reproduction. It has been found, however, that this is not the case.

It is well known that in the case of an insufficient number of image changes there is created the impression of a staccato movement. It has been found that the impression of movement acquires fluency with a number of image changes amounting to approximately 10 per second, and films with 12 image changes per second are in this respect quite faultless (the fact that they are not free from flickering has nothing to do with this). If now 12 single pictures per second are replaced by 24 pictures per second, it is true that sharper single pictures are obtained, but this greater sharpness of the single picture has subjectively no effect, as two successive pictures already appear to flow one into the other in the case of 12 single pictures per second.

The recognitions described in the above are technically utilised by the present invention. According to the invention, in a television method, the use at the receiving end of a storage principle, in which a plurality of image elements, for example a complete line and preferably an entire image, are made visible simultaneously, is combined with a transmission with a reduced number of image changes not exceeding approximately 12 per second. According to a further feature of the invention the number of image changes amounts to not less than 10 per second.

Whereas, therefore, for television purposes, image changes amounting to approximately 32 per second have been considered absolutely essential heretofore, and even with image changes in this number a satisfactory elimination of the flickering effect was not to be established, so that generally speaking there has been adopted the method of scanning in interlaced groups of lines with 48 to 50 half-scannings, it is possible in accordance with the invention when employing a storage system at the receiving end to obtain satisfactory pictures even with approximately 12 scannings of a simple kind.

A possible embodiment of the invention is described in conjunction with the diagram given in Fig. 1. In the same $R_1$ is an image-intercepting and signal-generating element at the transmission end, which is shown as electron camera according to the storage principle with cathode ray scanning, and possesses the cathode $K_s$, the anode $A_s$, the deflecting plates $P_s$ and the intercepting screen $S_s$, whilst $R_e$ is a receiving tube with storage of the image impression, such as the applicant has already described in a number of earlier applications, and which possesses

a cathode $K_e$, an anode $A_e$, deflecting elements $P_e$, a grid G consisting of metallic elements insulated one against the other, a surface-like image cathode BK, an electron-optical system O for large-surface reproduction, and a luminous screen $S_e$. As the transmission end there is a device for producing the scanning frequencies, which according to the invention are selected to be equal to approximately 12 per second, or $12n$ per second ($n$ being the number of lines per image), and are impressed on the synchronisation impulse generator. The synchronisation impulses produced serve, on the one hand, to synchronise the deflecting potentials produced in the scanning potential generators, and on the other hand they are conducted to the amplifying and modulating system to be impressed on the carrier wave and transmitted to the receiver. The scanning potentials are impressed on the scanning system $P_s$. The signal plate of the intercepting screen $S_s$ is coupled to the amplifying and modulating system, in such a manner that the signals representing the contents of the image are also impressed on to the carrier wave. At the receiving end the received signals are amplified and rectified, the signals representing the contents of the image are separated from the synchronisation signals and amplified and modulate at the anode $A_e$ the speed of the cathode ray, so that this charges by way of the secondary emission the grid G dependent on the image modulation. The synchronisation signals are amplified and synchronise the scanning potential generator, which supplies deflecting potentials for the system $P_e$. The potential-modulated cathode ray accordingly passes over the grid G synchronously with the scanning ray in the transmission tube $R_s$, so that the charges of the grid G correspond in their geometric distribution to the transmitted image. The emission of the image cathode BK is controlled according to the same geometric distribution, and the electron-optical reproduction of this image cathode on the luminous screen $S_e$ accordingly provides an image corresponding to the image transmitted. The receiving tube described is designed in accordance with proposals of the applicant.

In the transmission of films, in accordance with an additional feature of the invention, the procedure may be such that only each second film picture is transmitted, so that for example in the case of a film record having 24 image changes per second there again results a transmission number of 12 per second. An arrangement having a spiral aperture disc, by means of which this idea according to the invention is capable of being realised, is illustrated diagrammatically by way of example in Fig. 2. It is assumed that the arrangement operates with continuous advance of the film. In this embodiment of the invention the direction of movement of the film is selected to be from the bottom towards the top, as indicated by the arrow. The spiral-aperture disc rotates in such fashion that apertures pass successively over the film which are always higher and higher. The rate of movement of the film, however, is selected to be so high that nevertheless a scanning takes place from the top to the bottom of the picture, i. e. the film is moved twice as quickly in the upwards direction as the location of the scanning apertures during the rotation of the disc. In the drawing there are shown the positions of a particular film picture at a time which is considered equal to "0" and one-twelfth of a second later. At the time $t=0$ the inner end point of the spiral just commences to scan the upper edge of the picture in question. At the time $t=\frac{1}{12}$ sec. the outer end point of the spiral just completes the scanning of the bottom line of the same picture. At this moment the inner end point of the spiral commences the scanning of the next picture but one. The picture situated between the two is not scanned at all, as was the intention.

According to an additional feature of the invention, an interlaced line scanning of films can be so carried out that of each two successive pictures the one is scanned in one group of lines and the other in a group of lines staggered in relation to the first group, the first picture, for example, along the lines 1, 3, 5 . . ., the second picture along the lines 2, 4, 6 . . ., the third picture again along the odd lines, and the fourth picture along the lines of even number, and so forth. An example of an arrangement for carrying out this idea is illustrated diagrammatically in Figs. 3 and 4, whilst Fig. 5 shows in relation to Fig. 3 a somewhat modified arrangement.

In the embodiment of the invention illustrated in Figs. 3 and 5 there is employed a circular-aperture discs $S_1$ having $2n$ apertures, assuming $n$ to be the number of apertures for a group of lines. The distance between two adjacent apertures amounts to $b/2$, if $b$ is the width of the picture. It is assumed that the film is turned past the disc in such fashion that two apertures, which are spaced apart to an extent equal to the entire width $b$ of a picture scan two lines which are separated from each other by the width of a line. By means of a special diaphragm arrangement case is taken that in the interval between the scanning actions on the part of the last two apertures referred to the aperture between the same is unable to perform scanning. For this purpose there is provided a further rotary disc $S_2$ having a rim of $n$ diaphragm apertures. The width of each diaphragm aperture is equal to one-half of the width of the picture, i. e. is equal to $b/2$. The distance between each two adjacent diaphragm apertures is similar. Their height is made approximately equal to but preferably greater than the height of a scanning aperture in the disc $S_1$.

The operation of the diaphragm $S_2$ will be described in conjunction with Fig. 4. As starting point there is taken the time $t=0$, when the aperture 1 commences to scan the surface of the picture. It is assumed that at this moment the diaphragm is in such a position that the aperture 1 is just situated at the left hand edge of a diaphragm aperture. Each of the remaining apertures of odd number (indicated in Fig. 4 by small circles) is also situated at the left hand edge of the appertaining diaphragm apertures. The apertures of even number (indicated in the drawing by stars) are covered at this time. N represents the number of revolutions of the disc per second. According to the invention N is selected to be approximately equal to 24, from which there then result approximately 12 complete scanning actions per second. At the phase

$$t = 1 \cdot \frac{1}{N.n}$$

aperture No. 3 commences to scan the image area, viz. owing to the variation in the meantime of the position of the film along the third line. In the meantime the disc $S_2$ has also continued to rotate, in the same direction as the disc $S_1$ and almost at the same speed, although somewhat

more slowly, so that the left hand edges of the diaphragm apertures now lag to a slight extent behind the scanning apertures.

At the phase

$$t = k \cdot \frac{1}{N.n}$$

the aperture bearing the number $2k+1$ commences to scan. The drawing shows that as $k$ increases the diaphragm apertures lag to an increasing extent behind the scanning apertures. The circumferential velocity of the diaphragm $S_2$ is so selected that after a complete revolution of the scanning aperture disc the apertures of odd number have just been shaded and those of even number uncovered. Figs. 4*d*–4*e* show the change over to the shading of the apertures of odd number in the scanning aperture disc. After a complete revolution

$$\left(k = n;\ t = \frac{1}{N}\right)$$

the aperture 1 would again just commence its scanning action. At this moment, however, it is darkened, and cannot perform scanning. Following a further half line period, however, the aperture 2 commences to move over the surface of the picture. In the meantime the film has been advanced by the width of a line in the upward direction, and the aperture 2 accordingly scans the second line of the picture, which upon the scanning by the apertures of odd number remained unscanned. This scanning by means of the apertures of even number, however, relates to a different picture to that in the scanning by the apertures of odd number, as in the meantime the film has been advanced exactly to the extent of one frame.

In viewing Figs. 4*a*–4*e* it will be seen that during a revolution of the scanning aperture disc $S_1$ the diaphragm $S_2$ must have lagged behind by the amount $b/2$ along the periphery in question. This portion is equal to the $2n$th part of the complete periphery concerned. If $f_1$ is the rotation frequency of the disc $S_1$ and $f_2$ the rotation frequency of the disc $S_2$, there results

$$\frac{f_2}{f_1} = \frac{2n-1}{2n}$$

If, for example, there is assumed a scanning operation in two groups of lines each comprising 200 lines, it is shown that the frequencies of the two discs require to differ by .25%. In the case of $f_1 = 24$, the example selected above, the difference in frequency accordingly amounts to

$$\Delta f = f_1 - f_2 = 0.06$$

revolutions per second. A difference in frequency of this kind can be adjusted with extreme accuracy by stroboscopic methods.

It is now necessary to arrange the two discs $S_1$ and $S_2$ coaxially, as shown in Fig. 3. The arrangement can also be as indicated in Fig. 5.

When using the arrangement described in the above a certain difficulty arises insofar as the scanning of the second group commences, not one line period

$$\left(\frac{1}{N.n}\right)$$

but one and a half line periods after completion of the scanning of the first group (compare Figs. 4*d*–4*e*; scanning is not commenced at the time characterised by $k=n$, but at the time characterised by $k=n+\frac{1}{2}$). In the same manner scanning of the third group is delayed in relation to the second group. In a change over between two groups of lines there is always a delay of one-half of a line period, and since the movement of the film is not affected by this delay and the frames accordingly move past the scanning line at a rate equal to N frames per second, the point of location of the gap between two scanned groups is gradually shifted over the surface of the picture.

This lack of synchronism can be eliminated according to an additional feature of the invention by the use of the arrangement described in the following in conjunction with Figs. 6 and 7, which arrangement also has the advantage of greater simplicity, as in the same a special diaphragm is not required.

The scanning apertures in the disc $S_1$ are selected to be odd in number, equal to $2n+1$. If the film has been taken with 24 frames per second, the disc rotates with a circumferential velocity of 12 per second, whilst the film is moved at such a speed that 24 frames per second are conducted past the scanning line. In the period of time, therefore, in which all $2n+1$ apertures have been moved once past the film area two frames have passed over the scanning line. As shown in Fig. 7, this results in the fact that if the first aperture commences to scan exactly in the upper corner of a picture, the $n+1st$ aperture cuts the lower edge of the picture at the centre and it covers the second half of its scanning path in the next picture. The $n+2nd$ aperture does then not scan the first line of the picture in question, as does the first aperture, but the second line. The groups of lines in which two consecutive frames are scanned are "interlaced", which means that the lines of the one group in relation to the appertaining picture are disposed between the lines of the other group in relation to this appertaining picture.

It is to be observed that for carrying out the fundamental idea of transmitting upon the scanning of films only every second film picture, and also in carrying out the idea, upon the scanning of interlaced groups of lines, of assigning each group of lines to another picture, other arrangements would also be possible to those discussed in the above. The fundamental ideas of the present invention are not limited to the described embodiments.

The great significance of the present invention resides above all in the fact that it greatly cuts down the width of the frequency band in the transmission. From this there result inter alia the following technical advantages:

(1) Considerable simplification and cheapening of the receiver connection system (smaller demands on the band filters, etc.),

(2) Simplification of the side band problem.

(3) Possibility of a longer carrier wave, and in consequence

(*a*) relaxation of the demands on connection, aerial design, etc., at the transmission and receiving ends imposed by the shortness of the carrier wave,

(*b*) greater range of the television transmitter and less effect on the reception by elevations of the ground or the like between the transmitter and the receiver.

HANNS-HEINZ WOLFF.

PUBLISHED
MAY 18, 1943.
BY A. P. C.

# HANNS-HEINZ WOLFF

TELEVISICN METHOD AND ARRANGEMENT FOR CARRYING OUT THE SAME

Filed Aug. 5, 1938

Serial No.
223,270

5 Sheets-Sheet 1

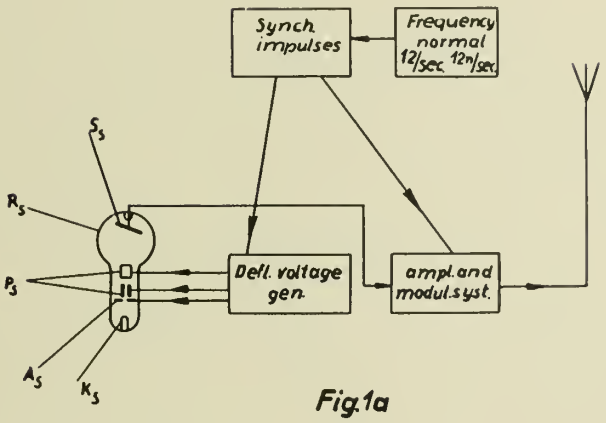


Fig.1a

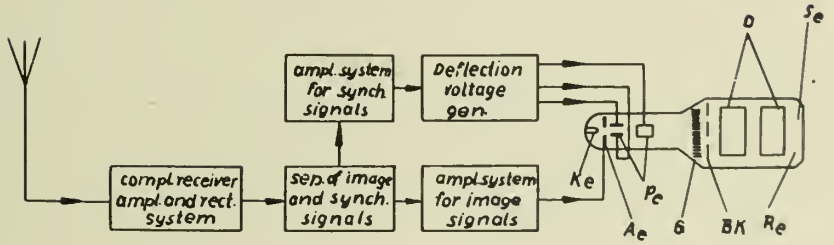


Fig.1b

Inventor:
Hanns-Heinz Wolff.

PUBLISHED
MAY 18, 1943.
BY A. P. C.

HANNS-HEINZ WOLFF
TELEVISION METHOD AND ARRANGEMENT
FOR CARRYING OUT THE SAME
Filed Aug. 5, 1938

Serial No.
223,270
5 Sheets-Sheet 2

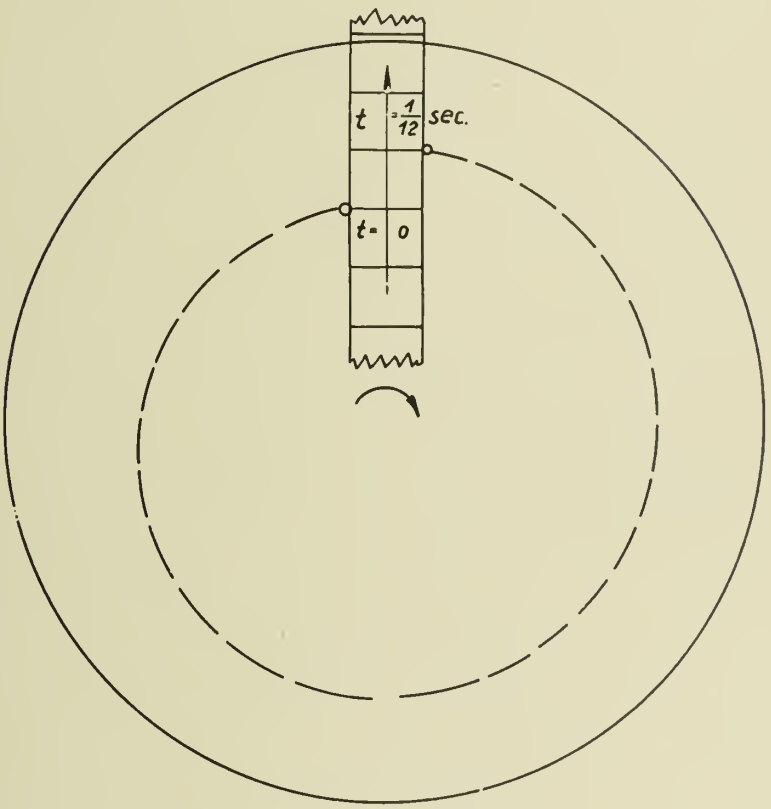


Fig.2

Inventor
Hanns-Heinz Wolff.

PUBLISHED
MAY 18, 1943.
BY A. P. C.

HANNS-HEINZ WOLFF
TELEVISION METHOD AND ARRANGEMENT
FOR CARRYING OUT THE SAME
Filed Aug. 5, 1938

Serial No.
223,270

5 Sheets-Sheet 3

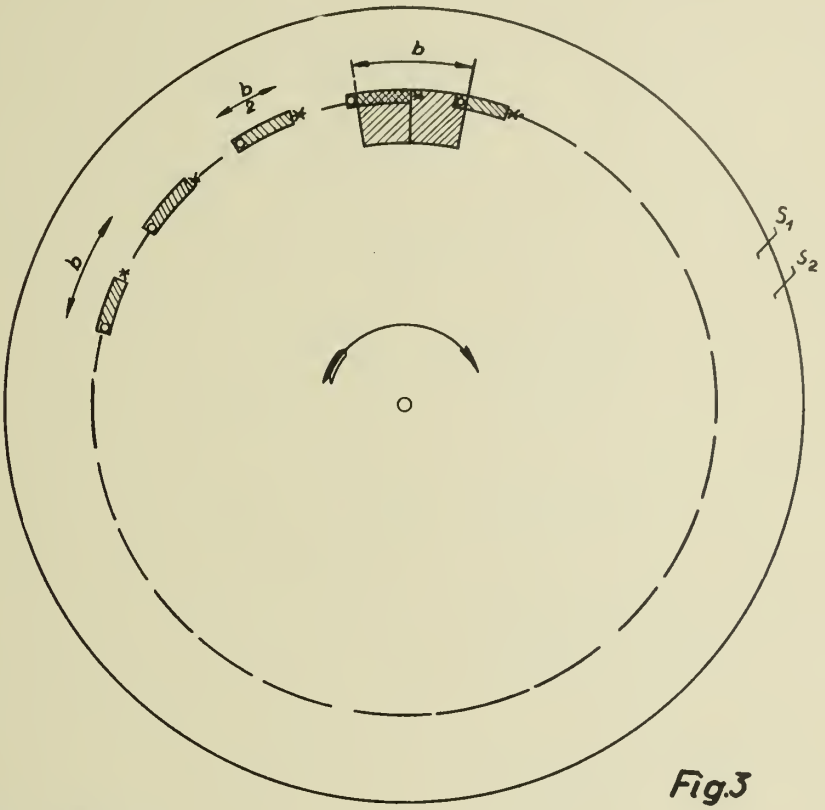


Fig.3

image area
area of a diaphragm aperture [disc $S_2$]

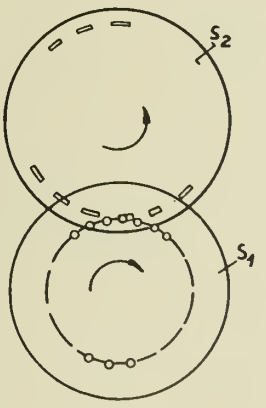


Fig.5

Inventor:
Hanns-Heinz Wolff

PUBLISHED
MAY 18, 1943.
BY A. P. C.

HANNS-HEINZ WOLFF
TELEVISION METHOD AND ARRANGEMENT
FOR CARRYING OUT THE SAME
Filed Aug. 5, 1938

Serial No.
223,270

5 Sheets-Sheet 4

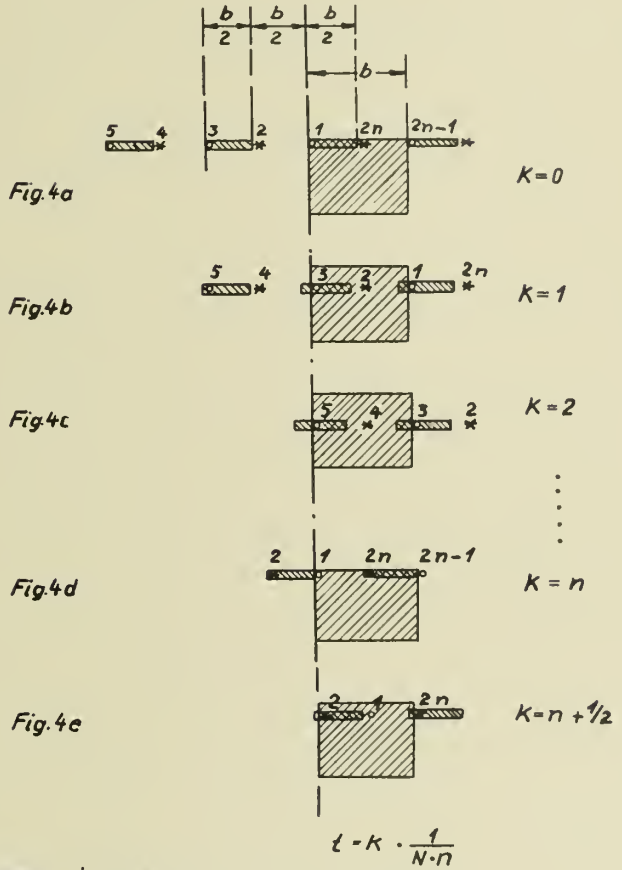


Fig.4a
Fig.4b
Fig.4c
Fig.4d
Fig.4e

Inventor
Hanns-Heinz Wolff.

PUBLISHED
MAY 18, 1943.
BY A. P. C.

HANNS-HEINZ WOLFF
TELEVISION METHOD AND ARRANGEMENT
FOR CARRYING OUT THE SAME
Filed Aug. 5, 1938

Serial No.
223,270

5 Sheets-Sheet 5

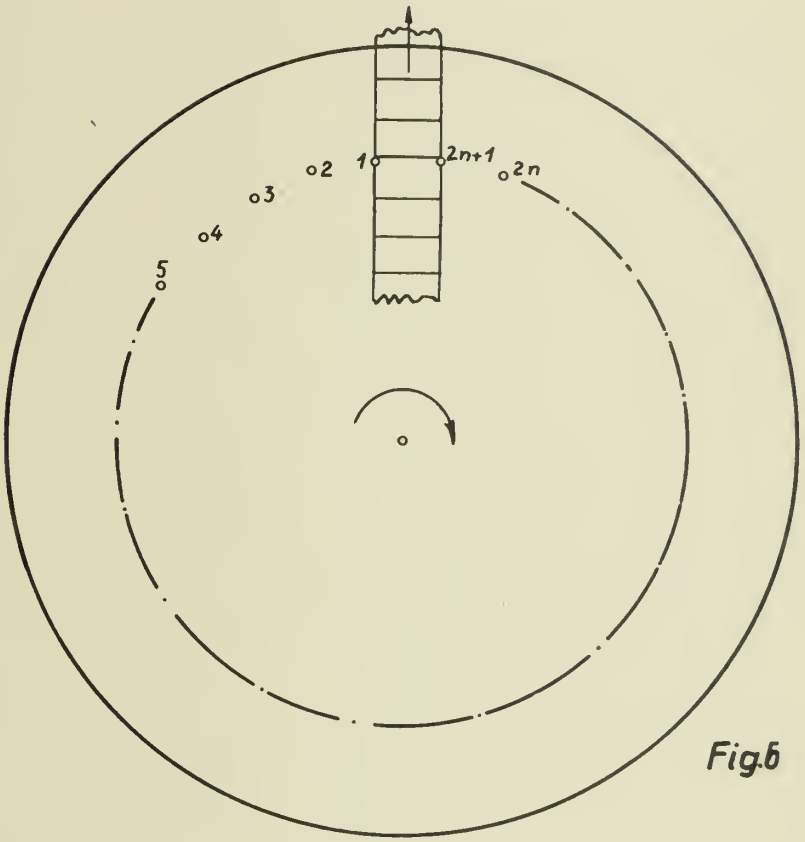


Fig.6

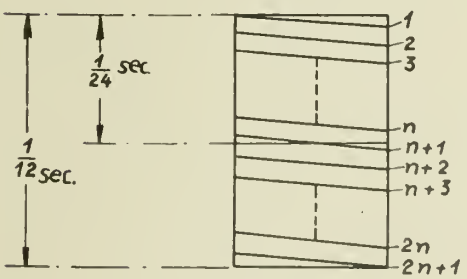


Fig.7

Inventor:
Hanns-Heinz Wolff.

Published May 18, 1943

Serial No. 227,770

# ALIEN PROPERTY CUSTODIAN

## ELECTRIC SEPARATION OF EMULSIONS

Carl Hahn, Berlin-Siemensstadt, and Wilhelm Feldmann, Berlin-Staaken, Germany; vested in the Alien Property Custodian

Application filed August 31, 1938

The present invention relates to the separation of emulsions and the like by means of an electric current.

It is known to separate emulsions and the like, for instance, an emulsion of oil and water by the electrical treatment by suspending in the container for the separation of emulsions metallic electrodes which are particularly supplied with high-voltage alternating or three-phase current. The known method presents the drawback that during the treatment the intensities of current are extremely high with respect to the consumption of energy in the case of a great water content of the emulsions. In the case of a high initial water content of the emulsions it has therefore already been proposed to keep the intensity of current small by employing, for instance, metallic electrodes insulated by glass. It is true that in this manner a small intensity of current may be sufficient at the beginning of the electrical treatment; however, in the case of a small capacity of the electrodes the intensity of current decreases during the treatment in accordance with increasing dehydration. In the following is shown how these difficulties may be removed when separating emulsions by the electrical method.

According to the invention the electrical separation of the emulsions is carried out in the manner that in the current supply conductor leading to the preferably metallic electrodes are inserted one or more capacitors having a continuously or gradually regulable capacity which is gradually increased or short-circuited with increasing dehydration of the emulsions. It is thus possible with increasing dehydration of the emulsions to gradually increase the capacity or to completely short-circuit it so that an economical operation of the separation plant may be effected with an approximately uniform intensity of current. Under circumstances the arrangement can be designed in such a manner that the capacities of the capacitors are gradually increased or completely short-circuited automatically in accordance with the variation of the intensity of current. In the case of the above-mentioned method the capacitors are preferably inserted in the supply conductors leading to the electrodes preferably outside the container for the separation of the emulsions.

In the majority of cases it might be sufficient to insert capacitors in the supply conductor leading to either electrode or to a pair of electrodes. In some cases, particularly with emulsions having a high water content or when using three-phase current it may also be preferable to insert regulable capacitors in the conductors leading to all electrodes. In all cases it is finally possible to design the arrangement in such a manner that the capacitors are controlled in the container automatically in accordance with the variation of the intensity of current, thus rendering the method according to the invention particularly simple.

In the accompanying drawings are shown two embodiments according to the invention. In Fig. 1, 1 denotes a tank in which is contained the emulsion 2 to be separated, for instance, an emulsion of oil and water. The emulsion is separated by means of two electrodes 3 and 4 arranged in the tank 1 and which are connected to the secondary winding of the transformer 7 through conductors 5 and 6, the transformer being supplied with energy from an alternating-current supply circuit. In the conductor 5 is inserted a variable capacitor which may under circumstances be also short-circuited by means of a switch 9. By such an arrangement the current supply to the electrodes placed in the tank may therefore be controlled in the desired manner in accordance with increasing dehydration of the emulsion. In the conductor 6 are inserted the four capacitors 10, 11, 12, 13 connected in parallel relation to each other. Furthermore, a rotary contact device 15 mounted on the shaft 14 is provided, by means of which device the four capacitors 10 to 13 may be switched in or out of the circuit one after the other. By such an arrangement also the current supply to the electrodes in the tank may be effected in the desired manner. Instead of four capacitors also a greater number of capacitors may naturally be provided.

In Fig. 2 is shown an embodiment of a device by which the capacity is automatically controlled in accordance with the intensity of current. 21 is a tank with the emulsion 22 to be separated and in which are provided the electrodes 23 and 24. The two electrodes are connected through the conductors 25, 26 to the secondary winding of the transformer 27 energized by the alternating-current supply circuit. In the conductor 26 is inserted a variable capacitor 28 which is controlled by means of a rotatably mounted shaft 29. A gear 30 mounted on the shaft 29 and meshing with the rack 31 serves to control the variable capacitor 28. The rack 31 is secured to the lower end of an iron core 32 which is suspended by means of a spiral spring 33. The iron core 32 may be displaced within the current coil 34 in the axial direction which is inserted in the conductor 26. In accordance with the variations of the intensity of the current flowing through the coil 34 the iron core 32 is more or less drawn into the coil 34 thus moving the rack 31 in the upward or downward direction thereby controlling the variable capacitor 28 in the desired manner automatically in accordance with the intensity of the current feeding the electrodes 23, 24

CARL HAHN.
WILHELM FELDMANN.

PUBLISHED
MAY 18, 1943.
BY A. P. C.

C. HAHN ET AL

ELECTRIC SEPARATION OF EMULSIONS

Filed Aug. 31, 1938

Serial No.
227,770

Fig. 1

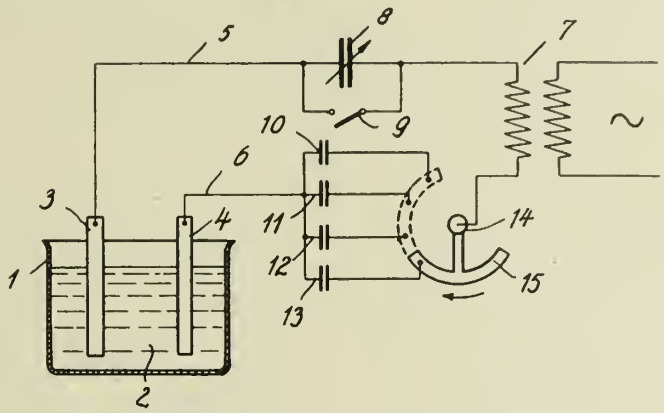


Fig. 2

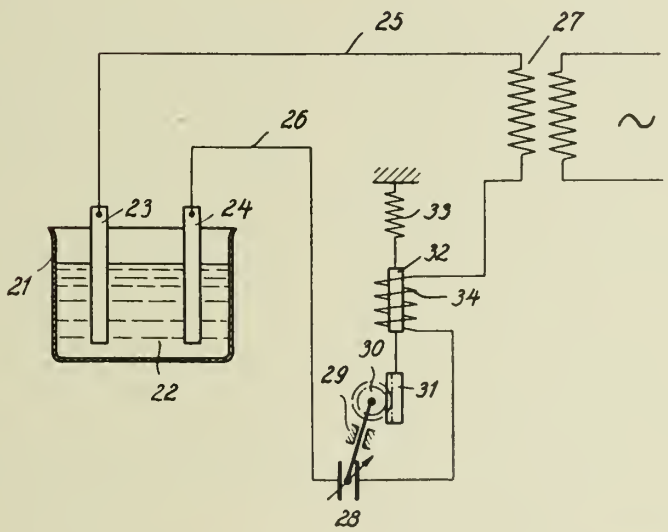


Inventors
Carl Hahn and
Wilhelm Feldmann
by Knight Bros
Attorneys

Published May 18, 1943 Serial No. 228,143

# ALIEN PROPERTY CUSTODIAN

## METHOD OF PRODUCING COATINGS ON MAGNESIUM OR ITS ALLOYS

Walter Mannchen, Dessau, Germany; vested in the Alien Property Custodian

No Drawing. Application filed September 2, 1938

This invention relates to a method of producing coatings on magnesium or its alloys which are adapted to protect the same from corrosion.

Dips are known which are composed mainly of free acid and heavy metal salts, and by means of which good pickling effects can be produced on the surface of workpieces made of magnesium and its alloys. Owing to their high acidity however, such dips are but little suitable for the formation of protective coatings. Moreover, electrolytic methods have already been suggested for forming protective coatings by anodic oxidation, by means of current from an external source in alkali metal salt solutions usually having an alkaline reaction. The coatings thus produced are not sufficiently dense and hard to afford adequate protection against corrosion to the metal, and must therefore be compacted by known methods, or be provided with a coat of paint. Moreover the electrolytic method requires a much more complicated and expensive bath equipment than the dipping process and its use would only be justified if the coatings produced thereby are superior to the coatings produced by the dipping process.

The process of the present invention is based on the idea of producing protective coatings on magnesium and its alloys by employing the metal or alloys as an anode in a galvanic cell.

The invention accordingly contemplates making the workpiece under treatment the negative electrode of a galvanic cell having a positive electrode consisting of a metal, preferably steel, which is more electropositive than magnesium and which remains substantially unattacked by the electrolyte during treatment, and connecting the two electrodes through a conductor thereby generating an electric current.

The electrolyte preferably consists of an aqueous solution containing a substantial proportion of a compound or compounds adapted to furnish chromic acid ions together with a smaller proportion of a compound or compounds adapted to furnish ions of another acid or acids.

The invention has been successfully carried out with a pH value of the electrolyte during the treatment which is below 7 but not substantially below 3.5. The compound adapted to furnish chromic acid ions may consist of a chromate or dichromate of any suitable metal, preferably however of an alkali metal. Moreover chromic acid itself may be used in which case however the surface of the treated article is apt to become rough and pitted.

The compounds adapted to furnish the ions of the other acid or acids may suitably be phosphates, borates, cyanates, sulphates, sulphites, selenates, selenites, tungstates, vanadates and molybdates of any suitable metal and are preferably used in the form of their alkali metal, magnesium or manganese salts, care being taken to adjust the pH value to the range above mentioned. The effectiveness of all the foregoing compounds can, in many cases, be materially improved by adding thereto a sulphate, a disulphate or a phosphate or a mixture of two or more of such salts.

In carrying out the invention, particularly favourable results have been obtained with electrolytes consisting of solutions of alkali metal chromates or dichromates containing between 5 and 12% and advantageously 10% of chromate or dichromate, to which 0.05 to 0.5% of an alkali metal bisulphate has been added in the case of dichromate solutions, and 5 to 15% of alkali metal bisulphate has been added in the case of chromate solutions. When using solutions consisting of a mixture of dichromate and chromate, the addition of alkali metal bisulphate should be adjusted in accordance with the ratio of dichromate to chromate. In cases where the electrolyte consists of a dichromate solution, the pH value should preferably be kept between 3.8 and 3.9, whereas when the electrolyte consists of a chromate solution, the same should preferably be kept between 4.5 and 6.0.

When the electrodes are connected together a current of about 0.5 volt and 3 to 4 amps. per sq. metre of electric surface is generated.

The period of treatment at room temperature should be about 30 minutes to 2 hours depending on the composition of the electrolyte and on the desired thickness of the protective layer.

After interrupting the current in the cell, the workpiece is removed from the electrolyte, preferably rinsed for 5 to 10 minutes in water at about 40° C., and then dried.

The hydrogen ion concentration of the electrolyte has a pronounced effect on the nature of the protective layer produced. When using less acid electrolytes, e. g. of a pH value of 4.5 to 6, the duration of the treatment for a coating of a given thickness is longer but the coatings produced are harder and denser. If, on the other hand, more acid electrolytes of a pH value of for example, 3.8 are employed, softer and more porous coatings are formed which are more suitable for certain purposes such as subsequent lacquering, painting or compacting and which moreover, are of a darker colour. It is therefore possible by

suitably controlling the composition of the electrolyte within the limits hereinbefore defined to produce coatings of any desired characteristics.

As has been shown by seawater spray tests, the protective coatings formed in accordance with the invention are greatly superior in their protective effect to those produced by immersion in the usual dips. Moreover the fact that no external source of current is required simplifies and cheapens the process.

The coatings produced in accordance with the invention, which by themselves furnish good surface protection, afford an excellent foundation for coatings of paint, lacquer or the like. If desired, the coatings can be further treated for the purpose of increasing their density and coherence, in any desired manner, for instance by immersing the coated article for about 20 minutes in a 5% waterglass solution at a temperature of 70 to 80° C. and subsequently washing and drying.

*Example I*

A bath was prepared which consisted of an aqueous solution containing 100 grms. of potassium dichromate and 0.8 grm. of potassium bisulphate per litre. A sheet consisting of an alloy containing 98% of magnesium and 2% of manganese and having dimensions 7 x 17 cm. and 2 mm. thickness was placed between two larger interconnected steel sheets at a distance of 4 cm. from each. The whole thus constituted a duplex galvanic cell. The magnesium alloy anode was connected to each steel sheet outside the bath by means of wires and a current of 0.5 volt and a mean amperage of 0.08 amp. was thus generated. After 75 minutes a black glossy and adherent layer had been formed on the magnesium alloy sheet. After removal from the bath the magnesium alloy sheet was rinsed in water at 40° C. for 5 to 10 minutes and then dried at room temperature.

For purposes of comparison the sheet provided with the protective coating was exposed for 709 hours to the seawater spray test together with a sheet of the same alloy that had been treated by immersion in an aqueous chromate solution of the usual composition (500 cc. of 40% $HNO_3$ and 180 grms. $K_2Cr_2O_7$ per litre). After this period the sheet merely treated by immersion had been attacked fairly severely and was even perforated at certain spots, whereas the sheet treated in accordance with the invention showed only very slight attack at isolated points.

Two further comparative test pieces (i. e. one treated by immersion and the other in accordance with the invention) were coated with a transparent cellulose lacquer and exposed to the seawater spray test. After 220 hours the lacquer had completely peeled off the sheet treated by immersion and the exposed surface showed strong signs of corrosion. At the end of the same period the lacquer coating on the sheet treated in accordance with the invention showed no tendency to peel; it adhered firmly to the base and only showed signs of slight pinhole attack at a few places.

*Example II*

A sheet of the same composition and having the same measurements as that described in Example I was treated in a bath consisting of an aqueous solution containing 100 grms. of sodium chromate and 80 grms. of potassium bisulphate per litre under the otherwise same conditions as those set forth in the preceding example. The voltage generated upon short circuiting the metal sheets serving as electrodes was 0.5 volt and the current density was 3 to 4 amp. per sq. metre surface of the magnesium alloy.

After rinsing and drying the magnesium sheet provided with the protective coating was coated with a cellulose lacquer and exposed to the seawater spray test, together with a sheet chromated by the immersion process hereinbefore referred to and likewise provided with a coating of the same lacquer. After 435 hours the chromated sheet had been badly attached over its entire surface and the lacquer film had peeled off. At the end of the same period the lacquer coating on the sheet treated in accordance with the invention showed signs of slight attack only at the edges, that is to say, at obviously faulty spots, and still firmly adhered to the metal sheet.

WALTER MANNCHEN.

Published May 18, 1943 Serial No. 230,090

# ALIEN PROPERTY CUSTODIAN

## METHOD AND DEVICE FOR THE ELECTROLYTIC OXIDATION OF THIN WIRES

Friedrich Dürr, Berlin-Friedenau, Germany;
vested in the Alien Property Custodian

Application filed September 15, 1938

It is known to protect metals, especially light metals, such as aluminium and magnesium, from the influences of the weather by providing them with a covering of a layer of an oxide. It has repeatedly been tried to make use of the same means in connection with fine or thin wires, in that, in the case of success, an ideal means would have been found to maintain the original silver-bright color and to render thereby possible to use this material for laces, braids and the like. Also in the electric industry such electrolytically oxidised thin wires could be amply employed by reason of the insulating capacity of the layer of oxide.

Up to now, however, all said endeavors have failed as regards thin wires, the reason being, that on the one hand, the oxidation must be effected in the galvanic bath with a current of a certain appropriate density and, on the other hand, the wires are too thin to let pass the requisite number of amperes without being too strongly heated.

The present invention relates to a method, as well as to a device permitting to oxidise electrolytically also thin wires consisting of a light metal. The method consists in essence therein that the wire which serves as anode is wound upon a supporting device which is used also for the supply of the current, the wire being oxidised electrolytically upon that supporting device. It is possible to obtain in this way the requisite density of the current without overloading the wire by the current.

The supporting device for the wire may be formed by a reel provided with projecting edges, whereby the wire wound upon it is subdivided into a plurality of pieces which are connected up in parallel, the electrolytic oxidation being effected on the thus subdivided wire. The reel consists, as a rule, of aluminium or another suitable light metal and is connected up to the source of current. The current is supplied to the wire by the intermediary of the numerous places of contact between the wire and the edges of the reel, there being always only short pieces of the wire which are connected up in parallel subjected to the action of the current.

As the electrolytic oxidation is produced strongly also laterally at the supporting places to such a degree that colorations and the like do not permit to discover an interruption of the layer of oxide, although the supporting place has remained electrically conductive, it is in many cases not necessary to wind the wire upon a reel, but to employ instead of such a one a roller-like supporting member having a cylindrical surface, the wire being wound upon this surface in such a manner that it contacts therewith along its entire length.

Carrying out the present improved method may be effected in this way that, for instance, the supporting device, say, a reel or a roller, is wound with the wire on its entire length and the reel etc with the wire thereon is then placed into the bath, but this procedure cannot be carried out continually and necessitates a larger number of reels. A continual operation is, however, rendered possible by winding the wire off continually either in one turn or in a plurality of turns over the rotating supporting member there being provided, besides, one or several guide members which regulate the winding off, the winding on and progressive movement of the wire on the supporting member. But the method may be carried out also in this manner that the winding-off place and the winding-on place of the wire are located always at the same place in the bath, the reel or the roller performing then an axial movement which corresponds with the pitch of the wire on the reel etc, or with the progressive movement thereof on the same. This procedure presents the advantage that the electrolytic oxidation of the wire can be carried out continually without the wire being subjected to mechanical strains by lateral shifting upon the supporting member or device.

In another modification of the method this latter is carried out in this manner that the wire to be treated is wound upon spools which consists of several layers and are composed while the winding takes place. When the reeling of one supporting member has been finished, another and still another, and so on, supporting member is arranged around the preceding one or ones, and each thereof is reeled like the first. It is possible to locate several layers of wire upon one spool and the receptacles containing the baths can be fully utilised as regards their space.

There are cases possible in which knotting the thin wire is no hindrance for the further working according to this invention, but also in such cases the use of supporting devices composed of several co-axial members is advantageous because the space occupied in the bath by the spool is only slight in spite of the longer wires. In this case the reels can be wound separately with the wire and can be composed to one structure only just before being dipped into the bath. The ends of the wire sections are knotted together after the individual concentric supporting mem-

bers have received the wire, and the wire sections are then in common subjected to the oxidation procedure.

When carrying out the method in accordance with this invention the places where the wires and the supporting member contact with one another remain without a layer of oxide in that the current passes through continually just at these places. This is without importance in many cases of use of the wire, because it is often times possible to manage in such a manner that the respective places which might, for instance, grow dark afterwards can be located on the rear side of the fabric. But there are also other cases in which that is not admissible. In such cases an artifice can be made use of whereby also the places in question can be oxidised as desired. As the said places are nearly always small like points, the surface portion still to be oxidised is correspondingly small in comparison to the main portion already oxidised, and owing thereto, also the intensity of the current with which the wire is supplied can be slight and will nevertheless produce the requisite density of the current in that the surface portions already oxidised are no more conductive. If, therefore, after the wire has been electrolytically oxidised upon the supporting member (reel, roller, or the like), an after-oxidation is effected at the still bright places in normal manner and with supply of the current to these places, all gaps are closed by this after-oxidation without any excessive loading of the wire with current. The improved method renders it, thus, possible to provide also thin wires with an actually complete covering by electrolytic oxidation.

In the accompanying drawings I have shown diagrammatically and by way of example several constructional forms of devices designed for carrying the present improved method into practice. In these drawings

Fig. 1 is an elevation of a wire and of a reel upon which it is wound,

Fig. 2 is a side-view of the reel,

Fig. 3 is a front-view of a device for carrying out a continual oxidation,

Fig. 4 is a side-view of the device shown in Fig. 3,

Fig. 5 is an elevation of a device likewise for continual treatment of the wire and having an axially movable supporting member.

Fig. 6 is a front-view of a supporting device in which the wire is wound-on in several layers,

Fig. 7 is a vertical section through the device shown in Fig. 6, and

Fig. 8 shows another constructional form of a winding-on device having several spools.

Referring to Fig. 1, **2** denotes the carrying or supporting member which is constituted in this example by a reel upon which the thin wire **1** is wound. This reel is so designed that the wire contacts with projecting edges **4** (Fig. 2). The current is supplied to the member **2**, or the reel respectively, across the contacts **3**. The wire is wound upon the reel in the manner of screw-threads; when this has been done, the reel with the wire thereon is placed into the bath, whereafter the electrolytic oxidising method is carried out. It is a matter of course that the method can be carried out also with another suitable supporting member instead of with a reel, for instance with a roller, a sieve drum or the like.

To carry out a continuous treatment the wire can be wound on and off continuously while the supporting member is rotated at the same time. The reel **5** is rotatory supported at **6** and is rotated by an electromotor **7** or the like. The wire **1** runs from the spool **8** over the reel **5** which dips into the vat **9** and is thereafter when having left the vat wound upon the spool **10**. These phases and the progressive movement of the wire are regulated by a guide member which is stationary and carried round around the reel in the manner of a screw thread. This guide member can be made in the form of a wound spring of a metal-wire, for instance flat aluminium wire. The accurate distances between the windings of the thread are secured by distance pieces. The interior of the guide band is nicely turned hollow and oxidised so that the reel fits accurately in the guide member without any seizing. Instead of treating only one wire at the time being several thereof can be introduced side by side into the guide member, in which case the distance between the individual portions of the thread must be appropriately larger.

The guide member has the effect that the wire convolutions present upon the reel are shoved in the direction from the winding-on place to the winding-off place so that the wire is wound off and on always at the same places. At every revolution of the reel the wire dips again into the liquid whereby the total length of time requisite for the oxidation can be obtained. The reel is always covered with the material at all supporting places and cannot therefore ever loose its conductivity by oxidation. The current can be supplied through the reel, as well as through the guide member which consists of a conductive material.

The strain to which the wire is subjected by the lateral movement upon the supporting member during the winding-off can be obviated also by shifting the supporting member axially in correspondence with the progressive movement of the wire convolutions. For this purpose stuffing boxes **12** and **13** are mounted in the vat **9** and the roller-like supporting member is mounted in said boxes rotatory and axially shiftable. The wire **1** runs from a spool **15** to the supporting member **14** and is thereafter wound upon the spool **16** which is subjected to a slight pull. Corresponding to the progressive speed of the thread windings the supporting member is turned, as well as laterally shifted. When the roller **14** has covered its path it can be moved in the opposite direction with exchanged spools. In case the wire should tear and to render it possible to take hold of the ends at the place of tearing the roller can be so supported, or the level of the bath-liquid can be kept on such a height respectively, that a portion of the upper roller projects over the level of the liquid. It is, of course, possible that a plurality of supporting members is arranged side by side in one bath.

In the Figs. 6, 7 and 8 are illustrated supporting members rendering it possible to wind several layers over one another whereby it is furthermore rendered possible to obtain a particular utilisation of the capacity of the electrolytic baths. In the constructional form shown in the Figs. 6 and 7 a middle axle **19** is arranged between the disks **17** and **18** which are preferably provided with conical concentric bores **20** into which the reel bars **21** that bear correspondingly shaped counter-members are to be put. The operation proceeds in this way that first the first layer (shown in full lines) receives the wire **1** which is to be treated. Then another layer of bars is brought into place in the supporting member and the wire

is brought upon the next layer, as shown at **22** in Fig. 7 and is now wound in the same manner as before, but in the opposite direction. This procedure is repeated as often times as rows of bars can be housed upon the disks. As the distances between the individual layers or rows of bars can be small, it is possible to place an extraordinarily large amount of wire on a spool of low weight and necessitating only little room.

In the example shown in Fig. 8 there are two disks **23** and **24** rigidly connected with one another by bars **25**. The rows **26, 27, 28** which support the outer layers are supported in cage-rings **29, 30, 31** which are concentrically arranged. These rings are preferably conically enlarged at the inner side and fit upon correspondingly shaped counter-members of the disk **24** upon which members they can be shoved.

The operation in this case proceeds in this way that after the first layer has been wound either manually or by means of a coiling machine the ring **31** is shoved with the rods **26** upon the disk **24** to such an extent that the conical surfaces adhere closely to one another so that the cage can conduct a current and takes part in the rotatory motion. For the passage of the wire a suitably arranged slot is provided which presents the advantage that the ring **31** can laterally yield elastically. After the wire has been wound upon the cage **31, 26** also the other cages **30, 27** and **29, 26** receive the wire successively in the same manner, the cages being shoved upon one another, as already described. The thus finished supporting device is then inserted into the bath and the wire is treated as already described. With devices of this constructional form the procedure can be carried out also in this manner that the individual concentric spools receive the wire sections individually, whereafter the wire ends are knotted together and the spools are shoved upon another, the wire sections being then subjected in common to the electrolytic treatment.

It is a matter of course that the present improved method can be carried out also with the aid of other supporting members than those described and shown in this specification merely by way of example. Thus, for instance, also wire grates or sieve-like perforated supporting bodies may be used instead of the reels or cylindrical rollers.

FRIEDRICH DÜRR.

PUBLISHED
MAY 18, 1943.
BY A. P. C.

F. DÜRR
METHOD AND DEVICE FOR THE ELECTROLYTIC OXIDATION OF THIN WIRES
Filed Sept. 15, 1938

Serial No.
230,090
3 Sheets-Sheet 1

Fig. 1

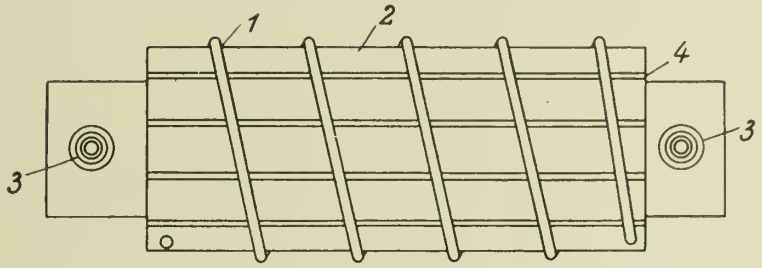


Fig. 2

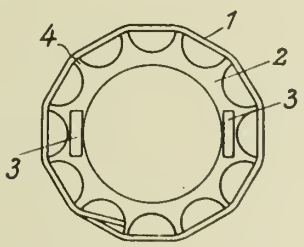


Inventor:
FRIEDRICH DÜRR
by Walter S Bleistein
ATTORNEY

PUBLISHED
MAY 18, 1943.
BY A. P. C.

F. DÜRR
METHOD AND DEVICE FOR THE ELECTROLYTIC OXIDATION OF THIN WIRES
Filed Sept. 15, 1938

Serial No.
230,090
3 Sheets-Sheet 2

Fig. 3

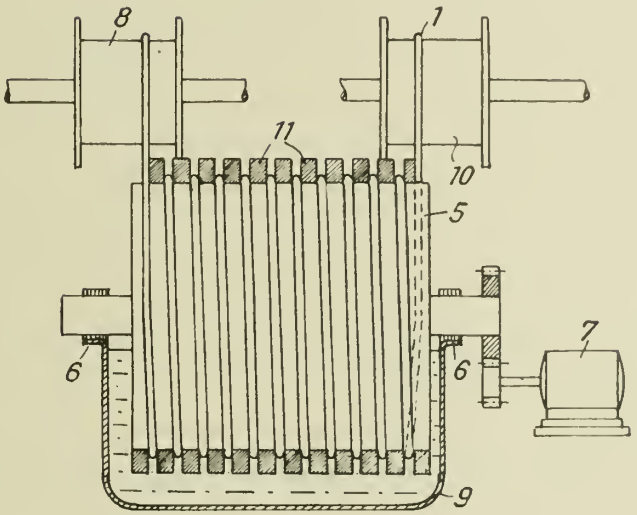


Fig. 4

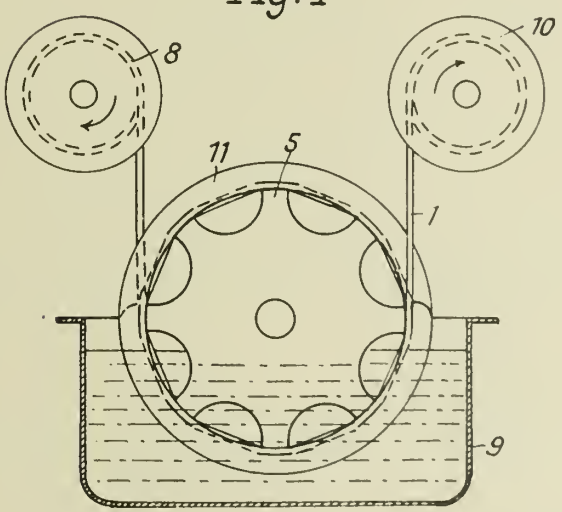


Inventor:
FRIEDRICH DÜRR
by Walter S. Bleecker
ATTORNEY

PUBLISHED
MAY 18, 1943.
BY A. P. C.

F. DÜRR
METHOD AND DEVICE FOR THE ELECTROLYTIC OXIDATION OF THIN WIRES
Filed Sept. 15, 1938

Serial No.
230,090
3 Sheets-Sheet 3

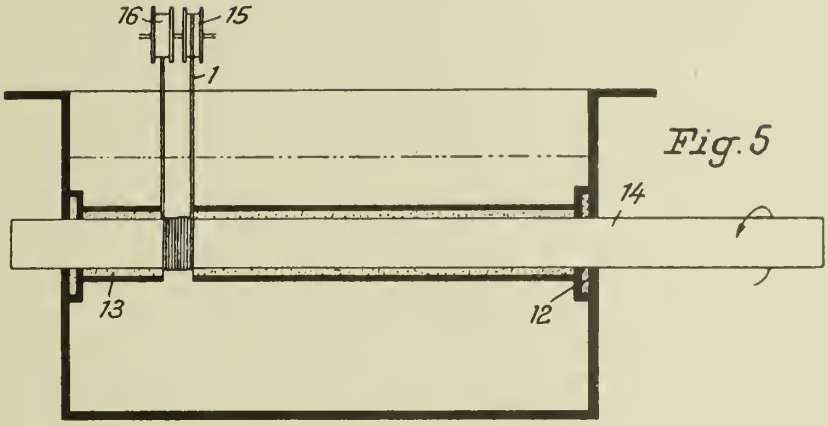


Fig. 5

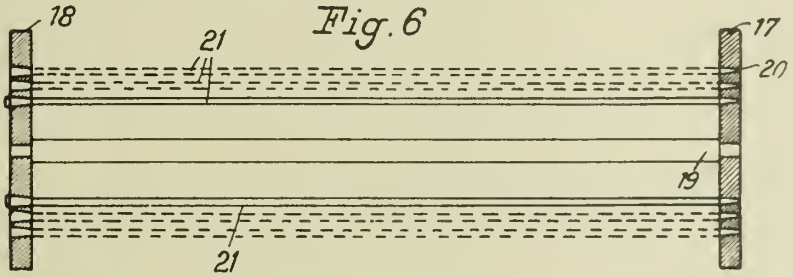


Fig. 6

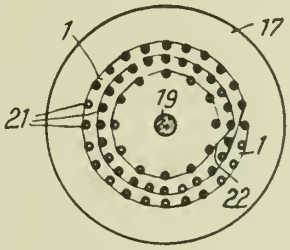


Fig. 7

Fig. 8

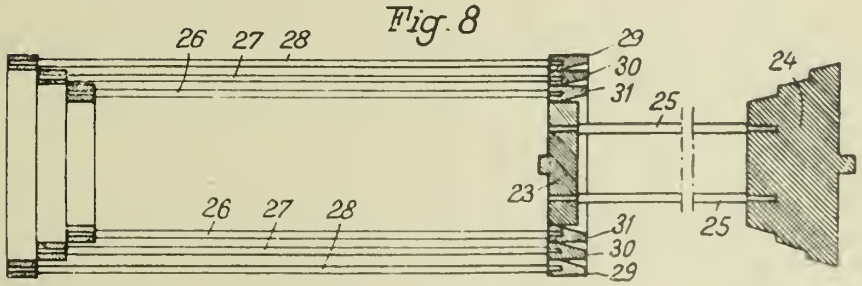


Inventor:
FRIEDRICH DÜRR
by Walter S Bleustein
ATTORNEY

Published May 18, 1943 Serial No. 231,799

# ALIEN PROPERTY CUSTODIAN

## ELECTROLYTIC APPARATUS FOR PRODUCING A HYDROXIDE OF METAL

Eiji Munekata, Nobeoka, Japan; vested in the Alien Property Custodian

Application filed September 26, 1938

This invention relates to improvements in an electrolytic apparatus for producing a hydroxide of metal, which comprises a metallic anode and a cathode, the anode being placed at the upper part and the cathode at the lower part in an electrolytic cell, and a means to flow the electrolytic solution through the anode towards the cathode.

The main object of the invention is to obtain a pure hydroxide of metal preventing the formation of a basic salt during electrolysis in the electrolytic solution, which retards the action of the anode and makes the product impure.

Another object of the invention is to obtain an apparatus for circulation of electrolytic solution whereby the solution is flowed through the anode towards the cathode carrying the metallic salt produced at the anode to prevent caustic alkali produced at the cathode from coming towards anode.

When electrolysis is carried out with a metallic anode such as nickel, copper, etc., in an aqueous solution of an alkali salt, e. g. sulphate of sodium, the anode metal is dissolved and a metallic salt is produced while hydrogen is generated at the cathode whereby a caustic alkali is produced.

The metallic salt and the caustic alkali thus formed diffuse each other in the bath and finally mix and react.

For instance, when copper and sulphate of sodium are used as the anode and the electrolyte respectively, adding a stabilizer to the electrolyte in order to have hydroxide of copper stably present in the bath, the reaction by electrolysis is shown by the formula

$$Cu+Na_2SO_4+2H_2O=CuSO_4+2NaOH+H_2$$

the anode copper being dissolved and hydrogen being generated at the cathode, and hydroxide of copper is further produced by the following reaction:

$$CuSO_4+2NaOH=Cu(OH)_2+Na_2SO_4$$

However, due to difference of the diffusion velocity of the electrolytic products, a by-reaction is apt to be taken place in the bath. In the above instance, caustic soda which has been produced at the cathode and has a greater diffusion velocity comes to sulphate of copper which has been produced at the anode and is still wandering near there, so that the following reaction is taken place between dense sulphate of copper and dilute caustic soda forming a basic salt:

$$4CuSO_4+6NaOH=CuSO_4\cdot 3Cu(OH)_2+3Na_2SO_4$$

In case a basic salt is formed free caustic soda appears in the electrolytic solution, so that the basic salt abovementioned would be turned into hydroxide of copper and sulphate of sodium by the reaction with the caustic soda as shown by the following formula.

$$CuSO_4\cdot 3Cu(OH)_2+2NaOH=4Cu(OH)_2+Na_2SO_4$$

But this is not the case. Actually, if free caustic soda is present in the solution, the abovementioned reaction does not occur, and oxygen is generated at the anode so that the anode copper is no more dissolved.

The reason that a basic salt is produced instead of hydroxide of metal in the solution is the caustic alkali produced at the cathode has a greater diffusion velocity, so that the caustic alkali comes to the metallic salt which has been produced at the anode and is still wandering thereabout, and dense metallic salt reacts with dilute caustic alkali.

According to this invention, electrolytic solution is flowed from the anode toward the cathode to prevent the diffusion of caustic alkali from cathode towards anode and to bring the metallic salt produced at the anode having a smaller diffusion velocity towards cathode, so as to have the caustic alkali reacts on the metallic salt under a condition that dense metallic salt does not react on dilute caustic alkali, whereby hydroxide of metal without containing a basic salt is obtained.

The accompanying drawing shows a sectional elevation of an electrolytic apparatus according to this invention.

An electrolytic cell 1 provides a pipe 2 which opens at the bottom of the cell, and the solution in the cell is circulated by a pump, not shown, through this pipe and is returned to the cell.

An anode 3 is made of a proper metal and is hung on an anode pole 4. As the anode metal is dissolved in course of electrolysis, the hanging device for the anode has a provision for adjusting the height of the anode so as to keep the distance between the electrodes constant. Of course the metal can be replaced with a new one when it is consumed.

The anode provides many vertical passages 5 through its body and a circumferential wall 6 encircles the upper part of the metal and makes an open room above the metal. The circulated solution drawn from the pipe 2 is received by this room and flows downwards through the vertical passages in the anode.

Cathodes 7 are provided in the cell below the anode and a well known hydrogen collector 8 made of an insulating material in the form of an inverted trough or an enclosed diaphragm is provided for each cathode covering the latter so that hydrogen produced at the surface of the cathode is collected in the top space of the collector and is taken out of the cell by way of pipes, not shown, so that the disturbance of a

regular flow of the solution by the rising hydrogen bubbles is avoided.

In practice, the solution is circulated in the cell downwards through the anode, and carries the metallic salt which is produced at the anode. The circulation is so regulated as to produce hydroxide of metal when the electrolytic solution is passing in the neighborhood of the cathodes. If the circulation is too active the reacting zone for producing hydroxide of metal moves to the place beneath the cathodes, while if the circulation is inactive the zone moves to the place above the cathodes.

The solution taken out the cell contains precipitates of hydroxide of metal, and larger particles thereof are sedimentated and then separated from the solution by filtration while the finer particles suspend in the solution and are returned to the top of the anode. When the finer particles are passing through the reacting zone with the solution, some of the newly produced hydroxide of metal grows up around the nucleus of the precipitate and make the fine particles larger and larger until they are separated from the circulating electrolytic solution by sedimentation.

In this invention, the anode has many vertical passages in its body so that the circulating solution is scattered when it passes through the passages and evenly distributed in the cell. Therefore the reaction between the electrolytic products in the cell is carried out in good order.

Further, an anode having vertical passages therein affords a larger effective electrode surface area per unit sectional area of anode, so that an anode with a smaller sectional area is available, or the floor space for the cell can be saved.

In the drawing, the anode is made of a solid metallic block with vertical perforations, but it can be made in different constructions, for example, a bundle of metallic strips, therefore it is not limited to the one above illustrated.

EIJI MUNEKATA.

PUBLISHED

MAY 18, 1943.

BY A. P.

E. MUNEKATA

ELECTROLYTIC APPARATUS FOR PRODUCING A HYDROXIDE OF METAL

Filed Sept. 26, 1938

Serial No. 231,799

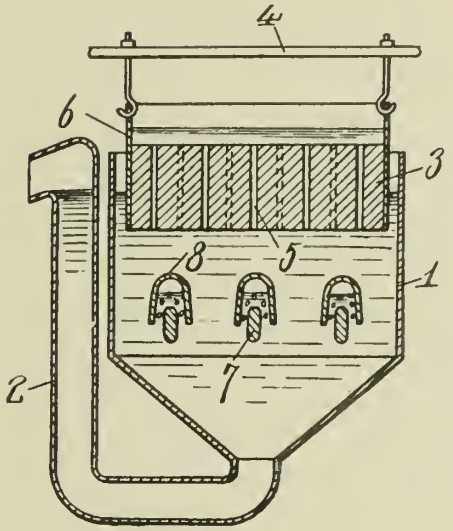


Inventor:
Eiji Munekata
By
E. F. Wenderoth
Atty

Published May 18, 1943 Serial No. 233,139

# ALIEN PROPERTY CUSTODIAN

## METHOD OF METALLISING ARTICLES BY MEANS OF CATHODE DISINTEGRATION

Bernhard Berghaus, Berlin-Lankwitz, and Wilhelm Burkhardt, Berlin-Grunewald, Germany; vested in the Alien Property Custodian

Application filed October 3, 1938

This invention relates to a method of metallising articles by means of cathode disintegration which is distinguished by the fact that the whole discharge energy which is applied to the cathode to be disintegrated amounts to at least 5 kw. at a minimum current of 5 amp. In order to be able to stand up to the high output the cathode is constructed so that it can be cooled; advantageously the cathode forms the vessel wall of the disintegrating chamber, which is surrounded by a coolable jacket through which can be led a cooling agent such as water, oil or air. The disintegration is effected at a pressure of 40 to 0.01 mm., and preferably at 5 to 0.1 mm., of mercury.

Experiments have shown that the quantity disintegrated off increases with the discharge intensity. In the case of disintegration of small electrodes the disintegration intensity may be produced in the main only by voltage increase, discharge current strengths above 2 amps. not being produced. The opinion generally prevails that electric outputs in cathode disintegration in the case of a total current of above 2 to 3 amps. are no longer possible since in consequence of the great cathode drop and the resulting great force on the cathode, arc formation takes place, that is to say a striking over into the so-called glow arc. Furthermore, there is also the opinion that the cathodes of large surface are uneconomical for the disintegration owing to the back diffusion of the particles disintegrated off. Experiments have now shown that even at cathodes of large surface the same quantity is disintegrated off per square cm. if the applied intensity per surface unit is chosen suitably high. In order to be able to use cathodes of large surface with a corresponding special discharge intensity, such as is employed in the case of thin wires, all together large current strengths are necessary or else only very small surfaces can be disintegrated. With suitable formation of the current lead in (anode), contrary to this opinion current strengths up to 50 and 100 amps. can be forthwith applied to a large surfaced cathode, even the discharge intensity per square cm. of surface of the cathode amounting up to 20 watts. If as a result of cooling the cathode the heat loss cannot reveal itself as a harmful temperature rise of the same, the discharge intensity per square centimetre of surface may be increased to any desired height. The total current strength may therefore assume values which may lie even above 100 amps. without the operative certainty of the discharge being impaired. The quantities then disintegrated off are proportional to those quantities which thin wires have attained as most favourable values in the disintegration. The current lead in to the anode, which in the case of alternating current operation may for a brief time be cathode, is protected by the interpositioning of a vacuum gap between the wall of the vessel and it. Behind this vacuum gap, which may have a space distance of 5 to 0.1 mm., there is the electrical insulating material proper. The vacuum gap interposed before the insulating material prevents the metallisation of the said material and consequently the feared arc formation in the case of high total discharge currents. In the case of the cathode being disintegrated being constructed in the form of a vessel, the voltages with high current densities on the cathode were comparatively small. Thus for example even with an applied voltage of 1000 volts a specific load of 30 watts per square centimetre could be attained on the cooled cathode. The total current strength on the discharge then amounted to 50 amp. The surface of the cathode to be disintegrated amounted to 1700 per square centimetre.

In the accompanying drawing one constructional form of the invention is shown schematically in some detail by way of example, the drawing showing a sectional elevation through an apparatus for metallising articles by means of cathode disintegration.

The cathode disintegration apparatus consists of a lower part 1 and a removable upper part 2, which are connected in vacuum-tight fashion by means of the seals 3 and 4, and which individually or jointly form the cathode. The total discharge output in the cathode disintegrating chamber amounted according to the invention to at least 5 kilowatts and the current strength to at least 5 amps. The load per square centimetre of the cathode surface amounted to at least 1 watt, preferably 3 to 60 watts per square centimetre. The upper part 2, constructed for example in the form of a hood, is provided with a cooling jacket 5 to which a cooling medium may be supplied through the lead 6, which medium can be run off through the outlet 7. In the upper part an opening is also provided which is closed off by means of a viewing window 8. The insulated pipe connection 9 arranged in the lower part has connected to it a vacuum pump (not shown) by means of which preferably a pressure of 10.0 to 0.05 mm. of mercury can be adjusted. The lower part 1 also possesses a pipe connection 10, which likewise is insulated with respect to the cathode. The

parts 11 and 12 are insulating rings and the parts 13 and 14 are insulating and pressing-on rings. A pressure indicating appliance may be attached to the pipe connection 10, and through the pipe connection 10 there may also be supplied a filling gas in regulated quantity by way of a regulating valve which is not shown. According to the material employed to be disintegrated there may be used as filling gas an inert gas, such as argon, krypton, xenon, helium, or a reducing gas, such as hydrogen, hydrocarbon or the like, the gas being employed stationarily or in flow. Nitrogen, ammonia or similar gases may also be employed if an action on the for example metallic material being annealed is intended before, during, or after the cathode disintegration. Gases or vapours may be supplied which have chemical actions on the material. In the lower part 1 the anode 15 is also arranged, insulated and screened off, as well as the lead-through element 16 which is constructed hollow and to which a cooling agent may be supplied through the lead 17, and led off through the lead 18. Between the anode 15 and the lower part 1 of the vessel there is a narrow gap of labyrinth form, which is so narrow that no glow discharge in the gap is possible. Also between the anode 15 and the lead-through element 16 there is a similar narrow gap of labyrinth form. The lead-through element 16 carries by means of an insulating screen pin 19 for example a quartz plate 20 on which the material 21 is disposed in insulated manner. The parts 22 and 23 are insulating rings and 24 is an insulating and pressing-on ring which is pressed on by a screw means which is not shown. The part 25 is a cooling duct which may be supplied with a cooling agent.

BERNHARD BERGHAUS.
WILHELM BURKHARDT.

PUBLISHED

MAY 18, 1943.

BY A. P. C.

B. BERGHAUS ET AL

METHOD OF METALLISING ARTICLES BY MEANS OF CATHODE DISINTEGRATION

Filed Oct. 3, 1938

Serial No. 233,139

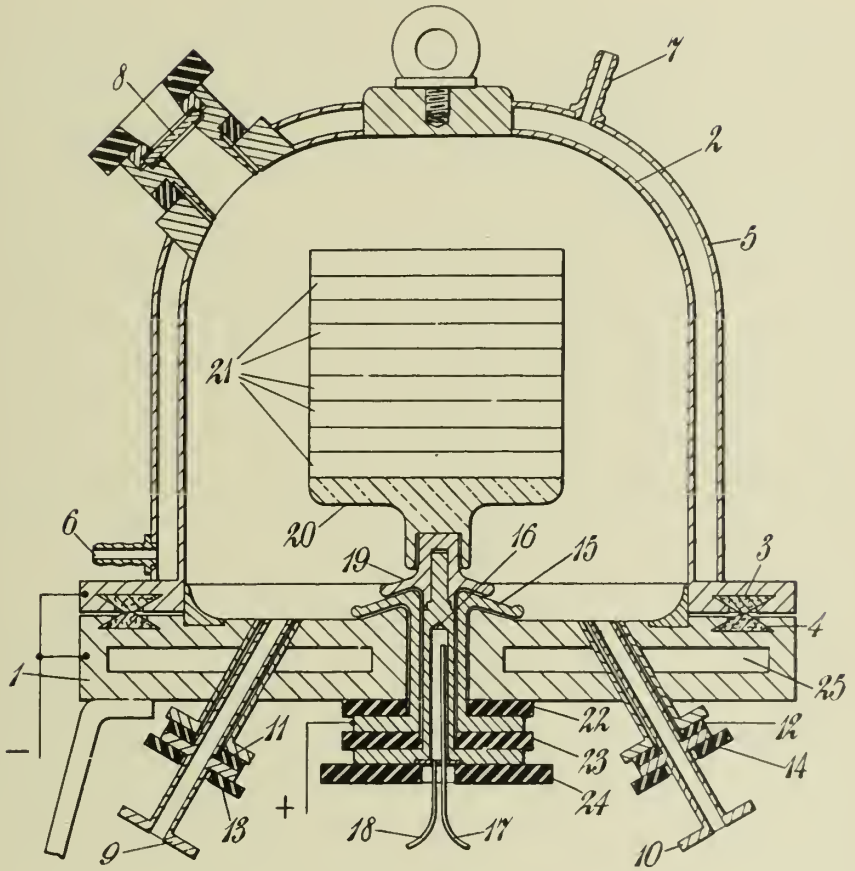


B. Berghaus
W. Burkhardt
Inventors

By: Glascock Downing & Seibold
Attys

Published May 18, 1943 Serial No. 233,270

# ALIEN PROPERTY CUSTODIAN

## SCREW PROPELLER

Albert Rupp, Berlin-Sudende, Germany; vested in the Alien Property Custodian

Application filed October 4, 1938

This invention relates to screw propellers, intended especially for aircraft, in which the blades are mounted in the hub so as to be radially movable to give automatic centrifugal adjustment of the blades and in which resilient means is provided resisting the action of centrifugal force to effect the adjustment-movement.

It is an object of the present invention to provide a device which ensures uniform adjustment of all the blades of the propeller.

Some embodiments of the invention are shown by way of example in the drawings, wherein:

Figs. 1 and 2 are side and front sectional elevations, respectively, of one embodiment of the invention.

Fig. 3 is a view corresponding to Fig. 2 of a further embodiment.

Fig. 4 shows a further embodiment in side elevation.

Figs. 5, 6 and 7 are sectional side elevations through other embodiments.

Fig. 8 is a front elevation of a further embodiment.

Figs. 9 and 10 are cross sections through still further embodiments.

Similar parts in the different figures are designated by the same reference numerals.

Referring to the drawings:

Figs. 1 and 2 show an embodiment in which uniform adjustment movement of the blades is ensured by a device constituted as a crank disc. The blade roots 1 are mounted in the hub 2 in a known manner such that the blades can by centrifugal force be moved lengthwise of the blade axes as well as turned about the blade axes to effect diametral adjustment of the blades with simultaneous pitch-adjustment. To obtain a uniform adjustment of all the blades the links 3, which are turnably supported on the blade roots, are connected to a crank disc 4 at equally eccentric locations thereon. The crank disc 4 is mounted on a pivot 5 which is fixed in the hub 2. As soon as one of the blades moves under the action of centrifugal force a given distance lengthwise of the blade axis the other blade is immediately simultaneously moved by the same amount through the intermediary of the crank disc 4 and the links 3. The propeller is further provided with resilient means resisting the action of centrifugal force to effect adjustment-movement of the blades, but in the interests of clearness these means have not been shown in Figs. 1 and 2.

Fig. 3 shows a modified form of the crank disc. In this case the embodiment is shown to have two crank discs 6 instead of a single crank disc.

Fig. 4 shows an embodiment in which a "two-armed" lever 7 (i. e. a lever whose arms are disposed on opposite sides of the lever's pivot) is used in place of a crank disc. This lever 7 is pivotally supported outboard of the hub 2 on a bracket 6 on the hub. The two-armed lever 7 is connected by links 10 with "single-armed" levers 11 (i. e. levers whose arms are disposed on the same side of the respective pivots) which can pivot freely about a fixed pivot 12 on the hub 2 and bear through the intermediary of rollers 13 on the blade roots 1. On movement of the blades lengthwise of the blade-axes the levers 4 are moved. By virtue of the two-armed lever 7 and the links 10 which are connected to the lever 7 at equal distances from that lever's pivot a uniform movement of the blades is obtained. The ends of the levers 11 are connected together by a tension spring 9 and this constitutes means resisting centrifugal adjustment of the blades.

Fig. 5 shows an embodiment in which one of the blade roots 1 is provided with a threaded nut 14 whereas the opposite blade root 1a is provided with a complementary threaded stud or screw 15. The nut and stud have fixed connections with the respective blades. On movement of the blades in the direction of the blade-axes the blade roots 1 and 1a are simultaneously turned about their axes by known means, viz: a key and feather device. In this way, the blades being interconnected by the bolt 15 and nut 14, the turning movements corresponding to longitudinal movements of the blades must be equal. The members 16 constitute parts of resilient means resisting the centrifugal adjustment of the blades, the means being essentially similar to those shown in Fig. 4.

Fig. 6 shows an embodiment in which the blade roots 1 are loaded by levers 16 and springs 17 in a manner similar to that shown in Fig. 4. Links 18 of equal lengths are coupled to the levers 16 and are connected to a slipper 19 which is guided in a slot or guideway 20. On movement of one lever 16 the slipper 19 is moved through the intermediary of the links 18 and pulls or pushes the other lever 16 by an equal amount.

Fig. 7 shows an embodiment in which the device to ensure uniform adjustment movement is constituted by directly interengaging toothed segments 21. These segments are, suitably, mounted on the pivots 22 of the levers 16.

Fig. 8 shows an embodiment similar to Fig. 7 but designed especially for hubs with more than two blades. The toothed segments 21 interen-

gage in this case through the intermediary of a toothed wheel **23**, disposed centrally in relation to the propeller axis, so that again all levers **16** are uniformly adjusted.

In Fig. 9 a further embodiment for hubs with more than two blades is shown and in this case a crank disc **24** having links **25** is employed in a similar manner as in Fig. 1. The crank disc **24** is positioned centrally in relation to the propeller axis.

Fig. 10 shows an embodiment which corresponds in principle to the embodiment according to Fig. 6. The blade roots **1** are connected with the slippers **27** by links **26**, the slippers being guided in a slot **28** on the hub **2**. On movement of the blade roots **1** in the direction of the blade-axes the slippers **27** are equally moved through the intermediary of the links **26**. The slippers **27** are loaded by the springs **29** which constitute the resilient means resisting the centrifugal adjustment of the blades.

It will be manifest that the uniform adjustment of all the blades is ensured by virtue of the fact that the device comprises a member movable in a determinate path and connected to the respective blades in each case by positively acting movement-transmitting elements, (e. g. the links **3**) that is to say elements which prevent relative play between the device and the blades.

ALBERT RUPP.

PUBLISHED
MAY 18, 1943.
BY A. P. C.

A. RUPP
SCREW-PROPELLER
Filed Oct. 4, 1938

Serial No.
233,270
2 Sheets-Sheet 1

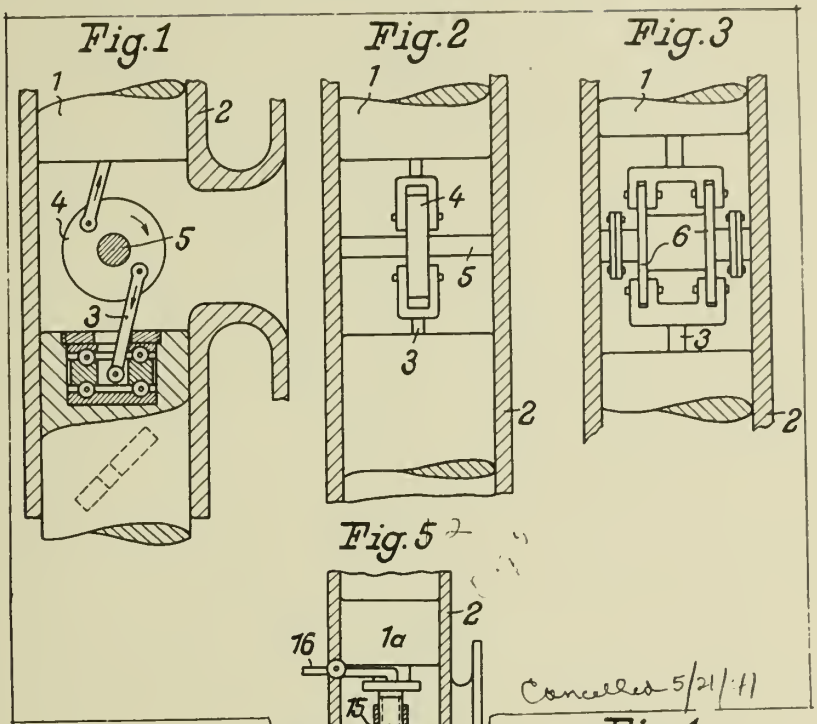


Cancelled 5/21/41

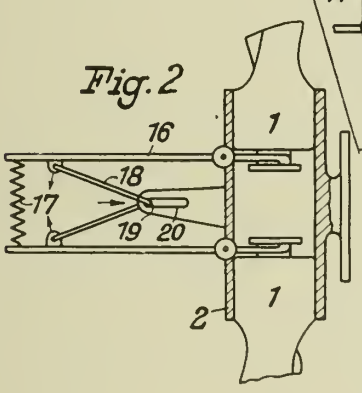


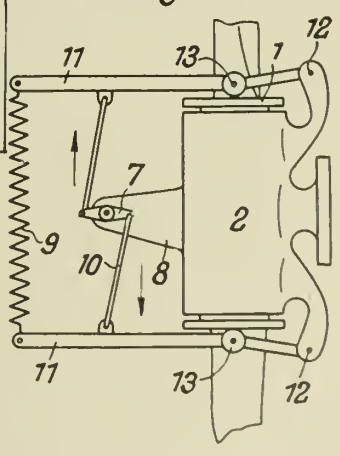


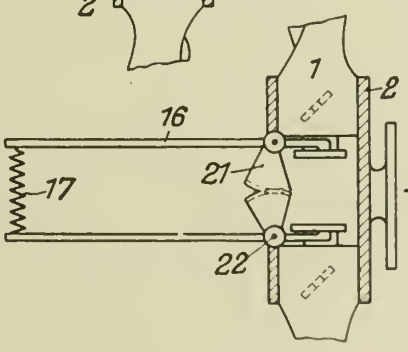


Inventor:
Albert Rupp
By J. Fuirie
Atty

PUBLISHED
MAY 18, 1943.
BY A. P. C.

A. RUPP
SCREW-PROPELLER
Filed Oct. 4, 1938

Serial No.
233,270
2 Sheets-Sheet 2

Fig. 8

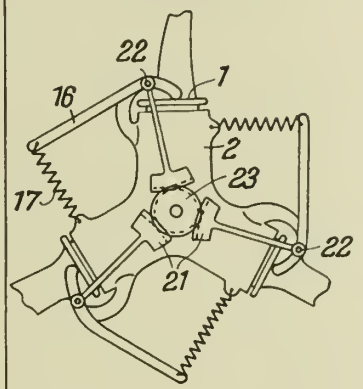


Fig. 9

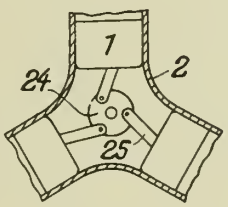


Fig. 10

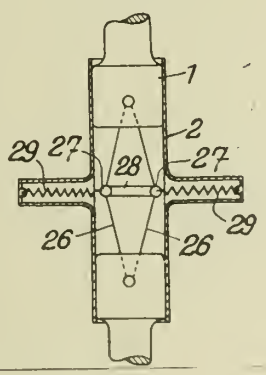


Inventor:
Albert Rupp
By
Atty.

Published May 18, 1943

Serial No. 233,325

# ALIEN PROPERTY CUSTODIAN

## PROCESS FOR THE IMPROVEMENT OF THE ELECTRICAL PROPERTIES OF SOLUTIONS

Richard Beck, Mainz on Rhine, Germany; vested in the Alien Property Custodian

No Drawing. Application filed October 4, 1938

This invention relates to a process for the improvement of the electrical properties of solutions such as galvanic baths with the object of improving the properties in the direction rendered desirable by the use to which such bath is intended to be put in each case.

These improvements may consist, in particular, in an increase in the conductivity and therefore an increase in the yield of current and in the reduction of the amount of current consumed in galvanic baths, in addition to other properties such as adhesion of the product deposited, ductility, reflexive power, resistance to corrosion and the like of the metallic coatings precipitated from them and in the saving in metal thereby obtainable, the new process making it possible, by taking suitable steps, when carrying it out, for one or another or a number of these improvements to be effected simultaneously.

It was unexpectly found that these results can be obtained, if to the solutions there be added a solution of an inorganic or organic substance produced by graduated dilution and thereby brought to a content of at the most 1:1000.

By this graduated dilution, which in practice goes so far as a rule, that when, if at all, only traces of a dissolved substance can be shown in the added solution, entirely new effects are obtained which are obviously no longer or, in any case, hardly of a material nature that is, are not due to a direct material action of the constituents of the solution on the substances in the main solution, but rather produce physical effects which may perhaps be regarded as due to the dispersive influence of the molecules of the main solution.

These effects depend, in respect to their quality, on the number of stages of dilution. It has been found that according to the number of stages of dilution, very greatly varying results can be obtained which can be empirically fixed at once, once and for all. Preferably a multiple, and in any case not less than three stages of dilution, are used in order to arrive at the final degree of solution which is necessary at the very least.

The production of the results to be obtained is also dependent upon the nature of the organic substances which contain the progressively highly diluted added solution. Substances which have shown themselves to be preferable are those which contain an active constituent of the ions which are similar to or of a kind related to those contained in the main solution, for example with radicles which are substantially the same or of a kind related to those contained in the salts which are in the solution or of acids which are contained in the main solution and are substantially the same as they or of a kind related to them.

Particularly advantageous constituents of the highly diluted additional solution which can be used both by themselves alone and also as additions to other additional substances, are certain organic acids such as benzoic acids and the acids which belong to the fatty acid group.

If, as is advantageous in many cases, additional solutions are used which, for example, for the purpose of acting on the properties of the main solution in various directions, contain a number of substances simultaneously, the solution of each of the several substances may be effected with advantage by bearing in mind the number of stages of the dilution which is most suitable for this purpose, and then mixing these solutions with each other.

It is important that the dilute solutions be only added to the already complete main solution and not during the production of the main solution, i. e. simultaneously with the process of solution of the salts which form them.

The amount of the progressively highly diluted solutions to be added may vary according to conditions. In most cases it amounts only to a few, say 5 cubic centimetres per litre of the main solution.

Hereinafter are given a number of examples of the way in which the new process can be carried out, which best demonstrate the manifold adaptability thereof to the various purposes for which it may be used, without of course the invention being confined to the possible uses illustrated by the examples given. In particular, its sphere of application is not confined to the treatment of galvanic baths, but extends also to any desired kind of solution, the electrical properties of which are to be acted upon or improved.

*I*

An electrolytic nickel bath which consists of:

| | Kilograms |
|---|---|
| Nickel sulphate | 17.5 |
| Magnesium sulphate | 6 |
| Sodium sulphate | 0.25 |
| Ammonium chloride | 0.7 |

has added to it a gradually highly dilute solution of shave grass (*Equisetum arvense*) in accordance with the above directions, 5 ccm. being added to each litre.

A considerable increase in the power of resistance of the nickel coating to corrosion results.

which per se is unfavourably affected by the necessary amount of ammonium chloride which is contained in the bath.

A similar result is obtained by the addition of some sodium hydroxide.

*II*

To a galvanizing bath, which consists of

| | Grams |
|---|---|
| Zinc sulphate | 150 |
| Ammonium sulphate | 50 |

is added per litre of water, a progressively highly dilute solution of antimony sulphate.

An increase in the purity of the deposited zinc from 97.5% to 100% is obtained.

*III*

To a sulphuric acid chromatising bath of the usual composition, is added a progressively highly diluted solution of benzoic acid.

This addition produces an increase in the yield of current from 17% to 22%.

*IV*

To a nickel bath as in I is added common salt in a progressively highly diluted solution.

A considerable increase in conductivity and a reduction of polarisation are produced.

*V*

To a potassium cyanide copper bath of the following composition:

| | Kg. |
|---|---|
| Copper potassium cyanide | 10 |
| Potassium cyanide | 0.42 |
| Potassium tartrate dissolved in 100 litres of water | 5 |

is added a progressively highly diluted solution of water glass.

A considerable increase in the density (ductility) of the copper coating is produced.

*VI*

To a similar potassium cyanide copper bath is added an extract of Birch (Birch elixir) containing saccharine and boric acid in a progressively highly diluted solution.

An equalisation of the previous fluctuations in the content of free potassium cyanide is then obtained.

*VII*

To a silver bath consisting of

33 g. of silver chloride per litre which is dissolved in
30.5 g. of potassium cyanide and contains
12–15 g. of free potassium cyanide

is added a progressively highly diluted solution of mercuric potassium cyanide.

A considerable acceleration of the silver precipitation is obtained under otherwise similar conditions.

*VIII*

To an acid copper bath consisting of

| | G. per litre |
|---|---|
| Copper sulphate | 250 |
| Pure sulphuric acid | 5 to 7 |

is added a progressively highly diluted solution of carbonate of nickel.

Considerably harder precipitation of copper are then obtained.

*IX*

To an acid tin bath consisting of

| | Kg. |
|---|---|
| Tin sulphate | 3 |
| Concentrated sulphuric acid | 7 |
| Adhesive substance per 100 litres of water | 1.5–2 |

is added a progressively highly diluted extract of fresh ox kidneys (which contain alkaline uric acid).

A considerable condensation and equalisation of the precipitate take place.

*X*

To a lead bath consisting of lead acetate and the usual admixtures, is added a progressively highly diluted solution of copper carbonate.

The coating which, previously too spongy, becomes perfectly fixed.

*XI*

To a warm gold bath consisting of

| | Grams |
|---|---|
| Sodium phosphate | 50 |
| Neutral sodium sulphate | 15 |
| Potassium cyanide | 1 |
| Gold chloride per litre of water | 1.5 |

is added a progressively highly diluted extract of fresh ash tree shoots containing saccharine and nitric acid.

A considerable acceleration and equalisation of the gold precipitate take place.

In all these cases the progressively highly diluted added solution may, for the purpose of further bringing about as required definite properties in one direction or another, contain, in addition to the aforementioned substances, also others of the class mentioned above as basic.

RICHARD BECK.

Published May 18, 1943 Serial No. 234,571

# ALIEN PROPERTY CUSTODIAN

## GLASS ELECTRODES

Walter Geffcken, Jena, Germany; vested in the Alien Property Custodian

Application filed October 12, 1938

The present invention concerns glass electrodes for measuring the concentration of hydrogen ions. When using these electrodes it is generally necessary to employ voltmeters of special sensitivity, because the electrodes are highly resistant to the passage of electric current. With a view to keeping this resistance as low as possible, the electrodes are provided with an especially thin diaphragm-like part. The thickness of the layer in which the electric potential is formed belonging to the category $1\mu$, the wall thickness of the diaphragm would not, on principle, be required to be much greater. The manufacture of diaphragms of thicknesses smaller than $50\mu$ is, however, difficult and would, on account of the fragility of such diaphragms, be disadvantageous. To further reduce the electric resistance, use is made, at least for the diaphragm, of glass of high electric conductivity. The conductivity can, however, be increased only at the expense of the chemical durability with respect to water, acids and alkalis by an increase of the alkali content in the glass. In the interest of a sufficient durability, the alkali content and, accordingly, the conductivity of the glass would have to remain within certain limits.

According to the invention, the electrodes can be, however, of glasses having a conductivity considerably higher than hitherto, if at least the diaphragm of the electrode consists of a plurality of layers, that is to say of a comparatively thick glass layer of high electric conductivity, though restricted chemical durability, and of one or a plurality of comparatively thin layers which cover at least the one side of and are of a greater chemical durability than the thick layer and whose electric conductivity need not in this case by particularly great. Whether a chemically resistant layer covers one side or both sides of the highly conductive glass layer depends on whether one or both sides of the electrode are to be in contact with the substance to be examined, for instance a liquid. The division of the glass wall into several layers has proved to be very practical in both these cases.

The manufacture of diaphragms according to the invention can be effected for instance by blowing small tubes of multi-layer glass whose principal part is of glass of high electric conductivity and whose thin layer is of glass of sufficient chemical durability. The proportion of the thicknesses of the different glass layers relative to each other is after the blowing the same as before.

Another possibility of making diaphragms consists in withdrawing chemically part of the alkali from the surface of the blown glass diaphragm of high conductivity, there being obtained, for instance by the action of acid or even water, a layer of silica gel which is swelled considerably. A process of this kind would take place by itself in the practical use of the electrodes for pH measurements. However, the gel layer thus obtained does, alone, not yet afford sufficient protection. This aim can be arrived at by carefully depriving the water from a thin gel layer having a thickness of approximately $1\mu$ or less and then increasing the hardness of this layer by a suitable complementary treatment. This complementary treatment may consist, e. g., in one of the processes known in the manufacture of silica gel, for instance in driving at temperatures above 100 centigrade. The usefulness of such a protective layer produced by lixiviation and subsequent hardening depends on the absence of pores and cracks. This condition can be fulfilled by a suitable lixiviating liquid, for instance sulphuric acid of high percentage and suitable temperature and by correctly dimensioning the thickness of the layer, the best conditions depending in each particular case on the glass used.

Use can be made also of still further proceedings for the production of thin protective layers. It is known, for instance, that in the electrolysis of glass in mercury one of the glass surfaces is impoverished as regards alkali.

The accompanying drawing, which illustrates the invention, shows by way of example an electrode in a section through its axis.

The electrode is a tube $a$ of multiple-layer glass having a thick interior glass layer $a^1$ of high electric conductivity and a thin glass layer $A^2$ of high chemical resistance, the lower end of the tube $a$ terminating in a blown diaphragm-like sphere $b$ which has the same, though much thinner, layers as the tube $a$. For convenience, the thicknesses are exaggerated in the drawing. The interior side of the sphere is covered by a thin layer c connected to a wire $d$ leading to the outside. The illustrated electrode is meant for immersion into the substance to be examined.

WALTER GEFFCKEN.

PUBLISHED
MAY 18, 1943.
BY A. P. C.

W. GEFFCKEN

# GLASS ELECTRODES

Filed Oct. 12, 1938

Serial No.
234,571

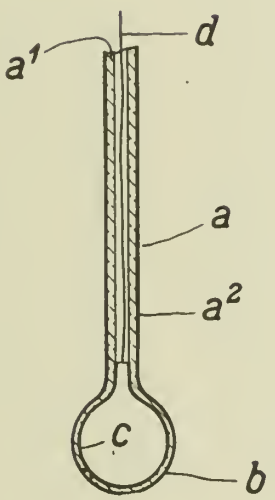


*Inventor:*

Walter Geffcken

Published May 18, 1943 Serial No. 235,888

# ALIEN PROPERTY CUSTODIAN

## DEVELOPMENT OF PHOTOGRAPHIC LAYERS

Johannes Rzymkowski, Jena, Thuringia, Germany; vested in the Alien Property Custodian

No Drawing. Application filed October 19, 1938

The invention relates to a method of developing photographic silver halide layers and consists in that adsorptive oxidation-reduction systems are used as developers, the reduction potential of said systems being electrolytically influenced during the development.

According to the new method, it is not only possible to maintain the developing power of the developer permanently at the stage desired in each particular case; but the effectiveness of the developer and thus also the $\gamma$-value of the developed silver halide layer can be influenced. This influencing is of technical importance, particularly for maintaining a definite $\gamma$-value during the development of picture strips.

It is recognised that the use of reversible oxidation-reduction systems is essential for the new method of development.

As suitable oxidation-reduction systems the following may be mentioned by way of example: anthraquinones, phenanthraquinones, indophenols, aminoindophenols, indamines, thiazines, oxazines, saffranines, rosindulines, rosindones and viologenes, but also conjugated systems with open chains, such as iso-vitamin C, heterocycles such as indigo derivatives, organic complexes of the type $Alk_x\,[(R.COO)_y\,Me_z]$ in which

Alk = K, Na, $(NH^4)$ etc.
Me = Fe, V, Ti, Cr etc.
R = the organic radicals

$-CH^3$, $-CH^2OH$, $-COO\ \ldots$, $-CH^2.COO\ \ldots$, $-C^6H^5$, $C^6H^4.O$ . . etc.,

and $x$, $y$ and $z$ = represent the various valency stages. Examples of such organic complexes are the ferric complexes with citrates. These oxidation-reduction systems constitute a mixture of the oxidation and reduction products, the designation of the oxidation-reduction systems always being effected according to the oxidized form. According to the invention, such an oxidation-reduction system is used as developer, and the reduction potential desired in each particular case, which, of course, can be altered from case to case, is electrolytically adjusted.

If, for example, it is desired to maintain the reduction potential at a constant value during the development, in order thus also to obtain a constant $\gamma$ in the developed halogen silver layer, the developer is in each particular case reduced by the electrolysis in the degree in which it is oxidized by the development.

Essential for the new mode of working is the use, in the first instance, of reversible systems as developers, inasmuch as only in this manner can the equilibrium be permanently maintained or be influenced in the desired sense. The usable oxidation-reduction systems must be adsorbed upon the silver halide grains or latent image.

Furthermore, it is advisable to use only those oxidation-reduction systems which yield a constant potential. As experience shows, this is best ensured in the fields which do not lie within the range of the over-voltage of the hydrogen or oxygen.

According to the new method, it is possible to undertake the development at the potential at which the development works free from fog and with large $\gamma$-values. Since the electrode potential of reversible oxidation-reduction systems often depends upon the pH value, as, for example, in the case of anthraquinone or indigo derivatives, it is advisable in such cases to maintain constant the actual hydrogen-ion concentration, which can be accomplished either by the addition of buffer systems, such as acetic acid-sodium acetate mixtures, borax-boracic acid mixtures or, alternatively, by blowing-in of carbonic acid, adding drops of acid, or by means of neutralization anodes and the like. Such a mode of working is furthermore indicated particularly when the electrodes are not arranged in the developing vessel. When a diaphragm is used, the passage of current liberates hydroxyl ions of the water at the cathode and additions are necessary to maintain the pH value of the developer solutions. This maintenance of the reduction potential at a constant value, on the one hand, by the electrolytic influencing, and on the other, by the maintaining constant of the pH value, would not produce any suitable developer liquids within the ranges of the hydrogen or oxygen over-potential since, as experience shows, in these ranges, the potentials set in only badly or very slowly.

During the photographic development of halogen silver, halogen ions become free. Although the potential of the redox system is not influenced thereby, the effectiveness of the developer would nevertheless vary in the event of an enrichment of these ions in the developer. If it is desired therefore to maintain constant the effectiveness and also the $\gamma$-value with continuous or frequently repeated use of the developer, the halogen ions must be removed from the developer. This is possible in many ways: for instance, by the addition of thallium salts, forming thallous halides, the disturbing halogen ions

can be bound and removed. However, the halogen ion is discharged at the anode and the halogen atoms then may be organically bound by means of organic compounds, for instance, by means of phenol, orthocresol and the like.

It is also possible to make use, in this case, of the addition of so-called "catalyst" for halogenation, such as iodine, iron, tin and the like in the electrolyte, in order easily to bring about the desired substitutions.

The manner in which the electrical treatment of the developer liquid is carried out in detail is, in principle, immaterial for the mode of working. Only the electrode potential of the oxydation-reduction systems used as developers must be capable of being electrolytically influenced. Thus, for instance, the development may be carried out in such a manner that the developing vessel is formed as an electrolytic cell. However, it is also possible to work in such a manner that the developer is allowed to flow through the developing vessel and the developer is subjected on its way, outside the developing vessel, to the electrolytic treatment according to the invention, it being again possible to take the electrodes or even only one electrode out of the developing liquid and to use divided cells.

It is advantageous, with this mode of working, to use the developing fluid as catholyte, because then the anolyte, in which the halogen ions are concentrated by ionic migration, can easily be renewed or the oxidized halogen ion can easily be organically bound there.

The electrolytic reduction of the oxidation reduction systems for the purpose of development is not only performed directly, but can also take place through an intermediate body, namely, a catalyst of reversible or irreversible potential. Thus, for the purpose of development, a photographic silver halide layer is bathed during or after the electrolysis of a oxidation-reduction system, as, for example, indigo-carmine in the presence of sulphite or bodies which, like iron vanadium etc. salts, can easily alter their valency.

As has further been found, many oxidation-reduction systems necessitate, on the electrolytic reduction of a cathode, high or medium overpotential. They are then reduced, as, for example, rosinduline-G, at cathodes of thallium, lead peroxide or the like. Latent images can also be developed on silver iodine with reduced forms (that is, leuco compounds of the oxidation-reduction systems, which is of importance).

*Practical examples*

1. A developing vessel for film strips is filled with 100 litres of a 1% solution of $\beta$-anthraquinone sodium sulphonate, of which the pH value for the development of a negative emulsion preferably consisting of silver bromide is adjusted by buffering by means of acetic acid-sodium acetate within the range of pH4 to pH5. Immersed in the developing vessel are two carbon electrodes at a distance apart of 150 mms. With the quantity of conducting salt used as buffer in the example, a potential of 8 volts has proved to be suitable. Immediately after the application of the potential difference, the $\beta$-anthraquinone sodium sulphonate is reduced in the vicinity of the cathode to the green anthrahydroquinone stage. The reduction is continued until a substantially equi-molecular mixture of the anthraquinone and anthahydroquinone stages is obtained, the current density at the cathode being chosen so high for the purpose of obtaining a good current output, that no visible bubbles of hydrogen arise. This equimolecular condition can, for example, easily be determined colorimetrically and potentiometrically in known manner. The film strip is now introduced into the now finished developer and the current density is moderated to such an extent that the equimolecular ratio is substantially maintained throughout the development. The maintenance of the reduction potential can be carried out entirely automatically if there are used for the colorimetric control, photo-cells, which in turn control the electrolysing current. In this manner, many kilometres of picture or sound strips can be developed in the same developing bath, without a fluctuation occurring in the $\gamma$ of the developed film.

2. A developing vessel of 100 litres capacity is charged with a 3% solution of o-cresol-indophenol, which has 5 gms. sodium carbonate in 100 ccs. solution. To the developing vessel, which is designed in the usual manner, there is connected a circulating system for the developer liquid, this system leading through an electrolytic cell which is constructed in such a manner that the developer solution is in the cathode compartment of the cell. In this cell there serves as catholyte a cold-saturated soda solution, which is separated from the catholyte by a steatite diaphragm of 3 mm. thickness. Symmetrically arranged on both sides of the diaphragm are electrode plates of stainless steel having a surface area of 250 sq. cms. on one side. After switching-in a voltage of 6 volts, the circulating developer liquid is reduced to the leuco stage, the blue colour of the electrolyte brightening considerably. The film strip to be developed, a silver bromide-containing negative emulsion, is now introduced into the developing trough, and the electrolysis in the electrolysing chamber is adjusted in accordance with the oxidation of the leuco stage.

In this practical example, the halogen ions which become free during development migrate from the developer into the anolyte. If phenol is added to the anolyte, until it contains about 1% phenol, tribromo-phenol is separated at the anode.

In the chosen practical example, blue dye, which is soluble in water, is separated near the silver. When choosing other indophenols and otherwise the same mode of working, it is possible to give a blue colour to the pictures on the picture strip; the silver can then be dissolved out with a known silver solvent, so that a blue organic picture remains behind.

This form of carrying out the method would also be suitable for the colour development for use in connection with colour photography, by treating in one or more emulsion layers in the above described manner.

JOHANNES RZYMKOWSKI.

Published May 18, 1943 Serial No. 237,710

# ALIEN PROPERTY CUSTODIAN

## TREATMENT OF OIL-SAND AND LIKE MIXTURES

Karl Grosse and Günther Schlicht, Wietze, Kreis Celle, Germany; vested in the Alien Property Custodian

Application filed October 29, 1938

Various processes have been proposed hitherto for the liberation of oil and the preparation of stones containing oil, wherein the liberation of oil could be carried out in individual apparatus, partly by the addition of chemicals, partly by means of extraction, and partly by mechanical means. It has also been known to carry out the preparation of oil-sand in washing apparatus by the employment of heat and movement, whereby the oil-sand has been mechanically whirled by means of steam and washed out by the employment of hot water. However, none of these known processes has been satisfactory for continuous working or for working on a large scale.

The applicants have for the first time carried out the process of the so-called direct earth oil mining, in which the oil containing granary stones are obtained in great quantity in mining drifts and working and which required a really effective preparatory process with the highest possible effect of oil liberation. After many years it has been possible to develop the treating process which constitutes the subject matter of the present invention and which has been found satisfactory in the working of large plants.

The applicants have found, as a result of their experience, that in the treatment of oil-sands two main problems have to be solved: on the one hand the oil has to be separated from the stones containing oil by washing with water, or if necessary by the addition of chemicals; and then on the other hand has to be obtained as a pure product from the washing water. The invention relates to a process for the preparation of oil-sands or similar oil-carrying stones in washing apparatus and in applying heat and movement, both these problems being practically solved with complete satisfaction. The invention consists essentially in that, during the entire treatment the materials to be treated are maintained approximately at a constant temperature by the repeated admission of heat. In the process in accordance with the present invention, it has been found possible not only to obtain a sufficient separation of oil from the oil-containing stones, but also a satisfactory separation from oil and washing water. The process in accordance with the invention is preferably carried out in such a manner that the overflow from the washing apparatus is subjected in settling containers or similar apparatus to a single or repeated admission of heat. The temperature at which the treatment in accordance with the invention is carried out depends on the type of oil. For example, in practice a temperature from 40° C. to 60° C. has been proved sufficient for light oils; whilst for heavy oils—for example of a specific gravity of approximately 0.94—a temperature up to 100° C. is necessary.

In accordance with a further feature of the invention the efficacy of the process in freeing from oil by the maintenance of an approximately constant temperature can be yet further improved by subjecting the product falling from the washing procedure to an electric treatment, either directly or during the passage through the heated settling containers. This electric treatment can, for example, be carried out, in accordance with the present invention, in such a way that the product obtained from the washing process constitutes a conductor between current carrying electrodes. This kind of procedure in accordance with the present invention is carried out preferably in such a way that the content of water of the washing product is maintained at not more than 20%, by suitable measuring of the draw-off from the settling receptacles. On the other hand, it is also possible to carry out the electrical treatment of the product in the process in accordance with the present invention, so that the washing product is exposed to the effect of an electrical field. It is thus possible to obtain a satisfactory yielding of oil with a water content up to 80%.

For the separation of earth oil and oil-sand on the one hand and washing water and oil on the other hand, sought by the method in accordance with the present invention, it may be essential in accordance with existing conditions to subject the article to be prepared, before entrance in the washing process, to a special selection in regard to the contents of clay or salt containing substances, as these promote extraordinary coagulation in the washing process and aggravate very strongly the oil separation in consequence. It is therefore advantageous to have the washing article freed before the washing process, for example by hand-picking a substantial part of the clay substance. In addition, or instead of this preparation of the washing article, the treatment can further be carried out by reducing the clay substances as much as possible, whereby the content of clay and salt in the washing water can be maintained at or below 1% by freeing from salt or freeing from clay, or by constant supplying of fresh water. The minimum percentage of clay and salt content which is still admissible for the economical carrying out of the preparation process depends substantially on the kind of earth oil obtained.

Further advantageous details of the invention can be seen from the drawings in which the invention is explained by some examples. In the drawings:

Figure 1 shows diagrammatically an oil-sand dressing plant working in accordance with the method of the invention;

Figure 2 shows in plan a settling plant;

Figure 3 shows one embodiment of an electrical treating apparatus, and

Figures 4 to 6 a further embodiment of an electrical treating apparatus.

In the present procedure illustrated in Figures 1 and 2, the oil-sand coming out of the mine is passed from the conveyor 1 first through the centrifuge 2 and then onto a revolving screen 3; the sand falling through the revolving screen 3 drops onto the transport belt 4 and is thence passed to the distributing belt 5. The coarser pieces pass from the revolving screen 3 onto a collecting belt 7 where the clay admixtures are picked out by hand. The oil-sand pieces are carried onto the breaking roller 6 where they are reduced to small pieces, passing thence to the distributing belt 5. The distributing belt 5 distributes the material to be dressed to the washing-apparatus 8 working discontinuously. The washing goods are introduced to the several washers 8 in determined quantities which are proportional to their sizes and to the quantity of washing liquid contained therein; and are whirled for a time fixed as the result of experiments, by means of steam, air or other gaseous medium, examples of the last mentioned being mainly inert gases and particularly gases of combustion from the boiler house. The oil-sand thus falls into the washing container filled with hot water and is whirled up during the downward lowering at one or several points.

In the illustrated embodiment of the invention suitably preheated fresh water is admitted through the pipes 9 and the steam and compressed air through the annular pipe 10 to the washers 8. The oil-carrier is freed as a result of the whirling action and by the heat from the adhesive oil film, the oil rises to the surface of the washers 8 and is here passed through the stream of the superfluous liquid into the overflow channel 11. From a reservoir 12 chemical coagulating agents can be admitted through the pipe 13. The oil-sand subjected to the washing process passes from the washer 8 into the rinsing container 14, where it is subjected to a rinsing by the admission of fresh water through the pipe line 15, and is finally extracted by a suitable drawing-off device 16 as dumping sand or mixing material.

The overflow of the washers 8 is deposited in deposit receptacles 17 and afterwards is brought into special separating containers 18, where a part of the washing water and mud or sand particles carried along are separated from the oil. It arrives finally at the oil collecting reservoir 19. According to the progress and considering the specific structure of the preparing plant, the oil-washing-water mixture is subjected in the deposit vessels 17 and 18 to a renewed heating which can be carried out in every case in the oil collecting reservoir 1 by feeding the coiled tubes 20 or the like with steam or any other heat carrier. In the oil collecting reservoir 19 a part of the washing water is again separated out. The overflow of the oil collecting reservoir 19 is conveyed to a preheater 21 preferably also steam-heated, and from there into the electrical manipulator 22, the design of which will be further described in detail. In the manipulator 22 a substantial part of the washing water is divided from the oil, which passes to the decomposition container 23, which is also steam-heated through a coiled tube 24. In the container 23 is obtained the oil ready for shipping which is delivered to an oil-truck 25 or to a large tank reservoir.

In accordance with the illustrated example the ground oil which is obtained from the mine by draining or other means, or earth oil obtained by boring, can also be subjected to the dressing process whereby this oil is firstly admitted to a deposit container 26 and afterwards to the oil collecting reservoir 19, in order to carry on this process simultaneously or parallel with the washing of oil from the oil-sand.

The overflow of the rinsing containers 14 and the discharge from the deposit receptacles 17, the separating container 18, the oil accumulating reservoir 19, and the apparatus 22, 23 and if necessary 26, are delivered through suitable pipe lines in the settling or clearing plant 27, which are separately illustrated in Figure 2 in elevation. This discharge consists substantially of mud coagulation and oil water mixtures and still possesses mostly a temperature required for the separation. This discharge is subjected to a renewed whirling in the clearing or settling plant 27, by means of compressed air whirling nozzles 28, whereby the oil rises as froth up to the surface of the individual container of the clearing or settling plant 27, and is drawn out by means of rakes in the oil overflow channels 29. From there the discharge is conveyed through the oil discharge channel 30 (Fig. 2) into an oil collecting reservoir 31, from which this product is subjected to a similar treatment to that described with reference to the main product from the oil collecting container 19. The used washing water is pumped from the last container 32 of the clearing plant 27 into a mud tank where it is allowed to drain.

In the example illustrated in Figure 3 the electrical device 22 consists substantially in a cylindrical vessel 33 in which the washed product is interposed directly as a conductor between current leading electrodes. The vessel 33 is earthed and is heated by a steam coil 34. Within it is rotatably suspended an electrode 35 which consists of a vertical axle 37 provided with three spaced sheet-metal discs 38 and driven by a rotating mechanism 36. The sheet-metal discs 38 are of a diameter approximately say 20 cm. smaller than that of the cylindrical external vessel 33. The rotating electrode 35 receives a voltage of approximately 9,000 to 12,000 volts. As in this example of the invention the current passes directly through the oil-water coagulation, this current is dependent on the water content. In consequence the success of this form of the invention depends essentially on water content, which should not surpass substantially 20% for carrying out the aforesaid stages of the process. This upper limit of the water content varies with various kinds of oil: for example, heavy oils of a slightly higher water content may still be purified; whilst light oils may only be treated with a water percentage of under 20% in the illustrated plant. The separation of the water from oil is substantially accelerated when the temperature of the oil in the aforesaid preheater 21 is brought up to 60° C. and is maintained then by the heating of the steam coil 34 approximately at

this level. The same temperature limit is maintained in the adjacent decomposition container **23**. The invention has proved that with a heat of approximately 60° C., the viscosity of practically all earth oils is so small that the water in finely distributed form can be comparatively quickly expelled. With sufficiently large measuring of the decomposition container **23**, the electrical treatment in the container **22** can also be carried out continuously.

Should earth oils with a water content higher than 20% be clarified, electrical manipulators with insulated electrodes are preferably employed, in accordance with the invention as illustrated in the examples of Figures 4 to 6. The purifying of the oil is then achieved by the creation of a strong electrical field. This effect can be further heightened by suitable shaping of the electrodes. In the illustrated example, the oil admission is indicated at **33**, the oil discharge at **40**, and the water outlet at **41**. The device consists substantially of an earth container **42**, in one compartment of which glass plates **44** are suspended on insulators **43**. As a conducting coating a fine wire cloth is employed, which is arranged in an oil-tight manner between the glass plates **44** and which creates on the one hand a large laminar field effect and on the other hand produces in the direction of the wires a large accumulation of field lines, so that these reinforced field lines have for a consequence an additional directing strength for the water particles finely distributed in the oil. As the electrodes are insulated by this manner of treatment, the current consumption is comparatively independent of water content of the earth oil, and oils with a water content up to 80% may thus by this manner be treated. The voltage here can be raised up to approximately 15,000 volts. Between the electrodes insulated by the glass plates **44**, sheet metal plates are appropriately placed at a distance of 3–5 cm., which are in direct connection with the sheet metal housing **42** and are therefore earthed. The plant can be considered in a certain degree as a condenser, the capacity of which varies with the type of dielectric, consisting in an insulating plate and earth oil coagulation. The change of capacity takes place proportionably with the changing rate of current. In the illustrated example the oil, controlled by the slide valve **46**, passes firstly through the various compartments of the appropriate treating device and reaches then the decomposition container **23** built unitarily with the device, as illustrated in this example; from which container the purified oil discharges through the outlet **40** and the water through the outlet **41**. The heating of the oil so that it may have only a small viscosity is carried out in the same or a similar manner to what is illustrated in Figures 3 or 1.

The invention, however, is not exhausted in any way by the illustrated embodiments, but can be carried out constructively in various other manners. For example, the oil may also be centrifuged as an intermediary or final treatment, where again the essential feature of the maintenance of a defined constant temperature may be borne in mind. Further the invention is not particularly bound up with the illustrated example of intermittent washing, but can also be carried out in a continuous manner without departing from its scope. Whilst in the intermittent process the introduction of the washing goods is effected in a dry manner, that is to say by the aid of suitable mechanical conveyor means; in the continuous form of the invention the admission of the oil-sand to the washers is carried out advantageously by hydraulic means, although it is obviously possible here to apply mechanical delivery also. The continuity of the process is mainly achieved by the fact that the rinsed oil carrier is distributed in a suitable manner in accordance with the delivery of fresh wash material. In vertical or obliquely arranged wash containers, a conical outlet is appropriately provided, from which the distribution is carried out by the aid of endless screws or worms, stop slide valves and suitable scratching devices or the like. Particular attention should be drawn here to the fact that the respective manner of distribution can be widely adjusted and especially excludes, for safety reasons, a sudden breaking of hot washing slimes in the washing container and also of the washed oil carrier. Should horizontal or obliquely-placed wash containers be used, the forward movement of the oil carrier from the entrance end to the delivery end takes place either by means of a worm or endless screw, or by stirring apparatus with stirring arms disposed upon the conveyor, or by the fact that with a closed cylindrical vessel the envelope is in rotation, whereby the transportation is effected with the aid of suitably arranged rotating ribs or sheets.

The preheating of the fresh water used for the washing process and also the high temperature which is achieved in the washing process depends on the contents of the oil in easily boiling substances; in order to prevent losses as much as possible, the washing apparatus and also the entire containers in which the oil is subjected to high temperatures for purifying or additional clearing, is equipped with drawing-off devices for the escaping of the foul air (vapour) from which the easily vapouring hydro-carbons are obtained in suitable condensing column.

The washing process may be improved in regard to the extraction of oil in the continuous and also in the intermittent process, by the addition of appropriate chemicals which act disturbingly upon the surface tension and boundary surface tension of the oil film surrounding the rock particles, or act as expelling means.

Finally, the electrical treatment illustrated in Figures 3 and 6 of the oil-sand is not absolutely bound up with the entire process, but possesses also for itself independent significance. In resume, the method in accordance with the invention can be employed in any of its several stages or in its entirety wherever the same or similar conditions exist, such as in the treatment and separation of oil-sand and other oil-containing minerals, as for example in treating earth oil obtained by boring.

KARL GROSSE.
GÜNTHER SCHLICHT.

PUBLISHED
MAY 18, 1943.
BY A. P. C.

K. GROSSE ET AL
TREATMENT OF OIL-SAND AND LIKE MIXTURES
Filed Oct. 29, 1938

Serial No.
237,710
4 Sheets-Sheet 1

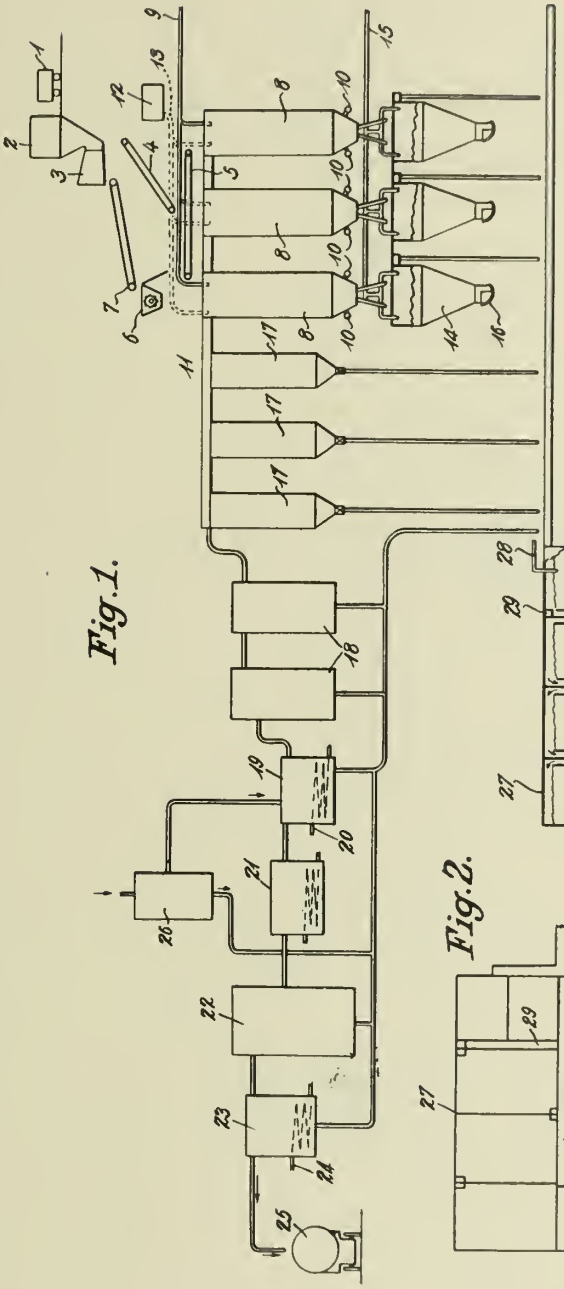

Fig. 1.

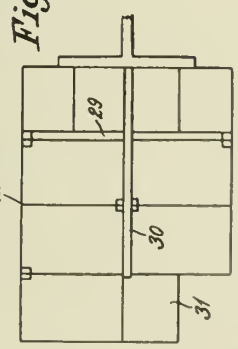

Fig. 2.

INVENTORS
KARL GROSSE AND
GÜNTHER SCHLICHT

BY Stevens & Davis
ATTORNEYS

PUBLISHED
MAY 18, 1943.
BY A. P. C.

K. GROSSE ET AL
TREATMENT OF OIL-SAND AND
LIKE MIXTURES
Filed Oct. 29, 1938

Serial No.
237,710
4 Sheets-Sheet 2

*Fig. 3.*

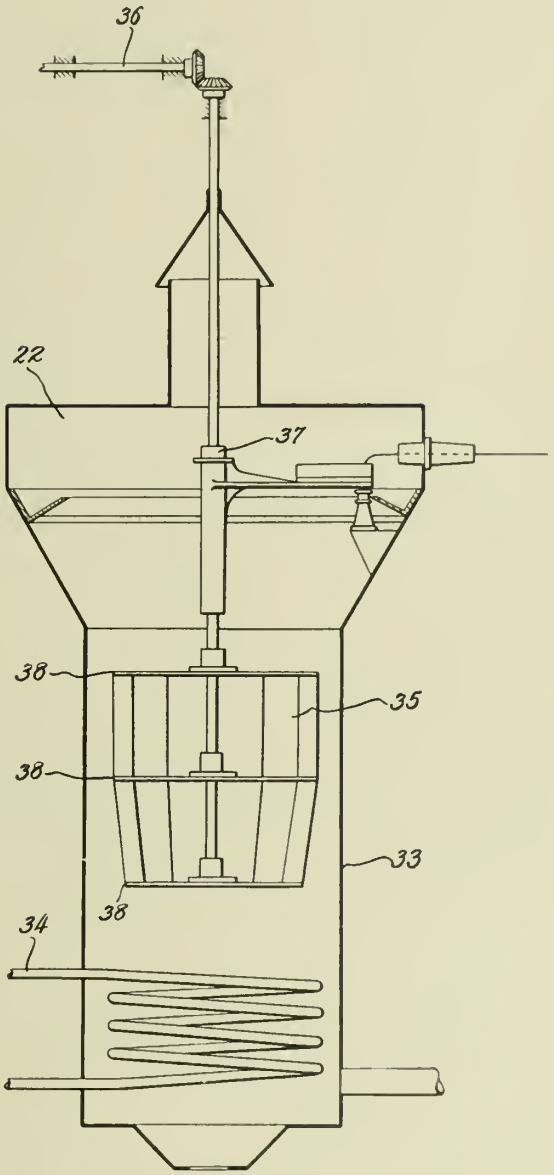


INVENTORS
KARL GROSSE AND
GÜNTHER SCHLICHT

BY Stevens & Davis
ATTORNEYS

PUBLISHED
MAY 18, 1943.
BY A. P. C.

K. GROSSE ET AL
TREATMENT OF OIL-SAND AND
LIKE MIXTURES
Filed Oct. 29, 1938

Serial No.
237,710
4 Sheets-Sheet 3

*Fig. 4.*

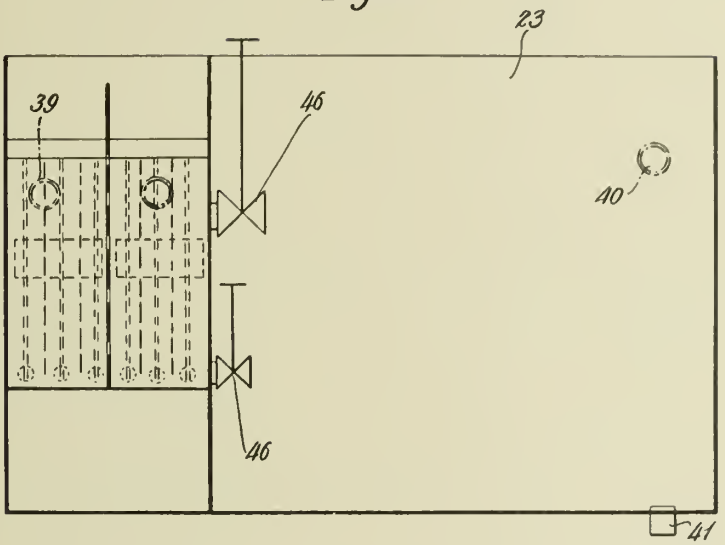


*Fig. 5.*

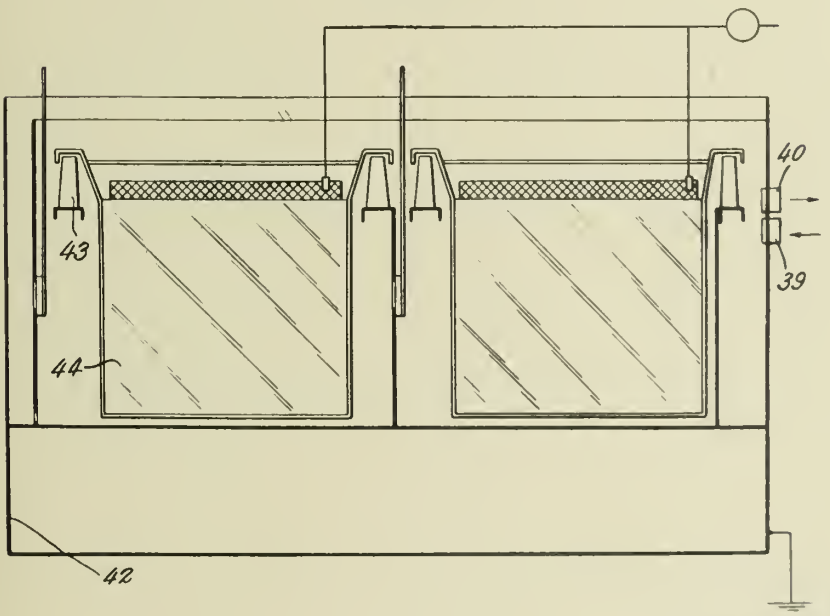


INVENTORS
KARL GROSSE AND
GÜNTHER SCHLICHT
BY Stevens & Davis
ATTORNEYS

PUBLISHED
MAY 18, 1943.
BY A. P. C.

K. GROSSE ET AL
TREATMENT OF OIL-SAND AND
LIKE MIXTURES
Filed Oct. 29, 1938

Serial No.
237,710
4 Sheets-Sheet 4

*Fig. 6.*

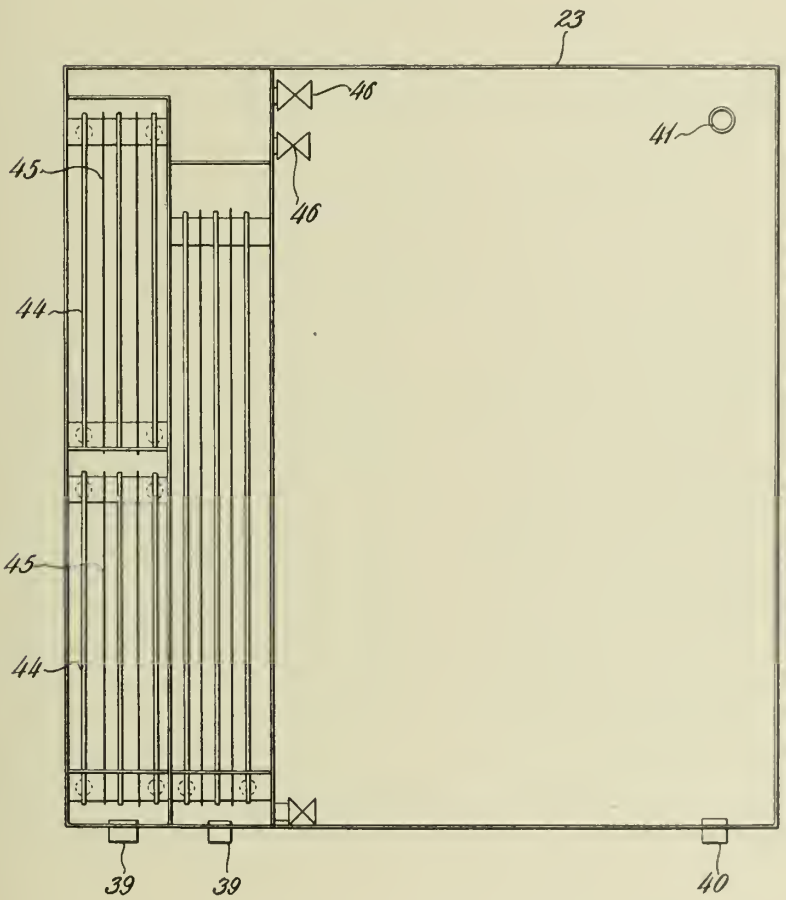


INVENTORS
KARL GROSSE AND
GÜNTHER SCHLICHT
BY Stevens & Davis
ATTORNEYS

Published May 18, 1943

Serial No. 237,956

# ALIEN PROPERTY CUSTODIAN

## ALLOY FOR PERMANENT MAGNETS

Walter Dannöhl and Hans Neumann, Berlin-Siemensstadt, Germany; vested in the Alien Property Custodian

No Drawing. Application filed October 31, 1938

The present invention relates to an alloy for permanent magnets.

In the copending application Serial No. 171,214, filed October 27, 1937, is described a permanent magnet consisting of an alloy containing as essential constituents 1 to 35% iron, 10 to 45% nickel, 1 to 70% cobalt and 20 to 28% copper, the percentages of iron, nickel and cobalt lying within the limits 1:7:49 and 1:0.28:0.04.

It has been found that the magnetic properties of these alloys for permanent magnets, particularly the coercive force, may be improved to a further extent by substituting in such alloys for a portion of the nickel one or more of the elements aluminum, manganese, chromium, vanadium, antimony, silver, beryllium, bismuth, cadmium, zinc, tin in a quantity totalling up to 9% of the alloy.

While, for instance, an alloy containing 15% cobalt, 15% iron, 30 nickel and 40% copper has a coercive force of 220 oersted and a remanent magnetism of 5000 gauss a coercive force of 270 oersted and a remanent magnetism of 4800 gauss are obtained if in an alloy of the same constituents 5% manganese is substituted for 5% nickel. If in the same alloy 7% nickel is replaced by 5% manganese plus 2% aluminum, a coercive force of 290 oersted and a remanent magnetism of 4600 gauss are obtained.

If in the case of an alloy containing 7% cobalt, 20% iron, 28% nickel, 45% copper and having a coercive force of 240 oersted and a remanent magnetism of 4300 gauss 3% aluminum is substituted for 3% nickel the coercive force increases by ⅓, i. e., to 320 oersted, whereas the remanent magnetism decreases only by about 12%, i. e., to 3800 gauss.

The alloys were annealed for 10 hours at a temperature of 1100 degrees Centigrade, quenched in oil and then heated for 4 to 16 hours at a temperature of 600 degrees Centigrade.

WALTER DANNÖHL.
HANS NEUMANN.

Published May 18, 1943

Serial No. 237,957

# ALIEN PROPERTY CUSTODIAN

## ALLOY FOR PERMANENT MAGNETS

Walter Dannöhl and Hans Neumann, Berlin-Siemensstadt, Germany; vested in the Alien Property Custodian

No Drawing. Application filed October 31, 1938

The present invention relates to an alloy for permanent magnets.

In the copending application Serial No. 111,252, filed November 17, 1936, is described a permanent magnet consisting of an alloy containing as essential ingredients 5 to 70% cobalt, 10 to 50% nickel and 20 to 85% copper and which is characterized by a coercive force above 100 oersted and of a remanent magnetism above 1000 gauss.

It has been found that the magnetic properties of these alloys for permanent magnets may be improved to a further extent by adding thereto one or more of the elements aluminum, manganese, chromium, vanadium, antimony, silver, beryllium, bismuth, cadmium, zinc, tin, the amount of the element or elements added thereto totalling up to 10% of the alloy.

In the table two groups of the alloys No. 1 to 5 and No. 6 to 9 are indicated which show the improvement particularly as to the coercive force. The alloys 2 to 5 are based on the alloy No. 1 containing 30% cobalt, 40% copper, 30% nickel, whereas the alloys No. 7 to 9 are based on the alloy No. 6 containing 40% cobalt, 30% copper, 30% nickel.

| Alloy No. | Co | Cu | Ni | Addition | $H_c$ | $B_r$ |
|---|---|---|---|---|---|---|
| | *Per cent* | *Per cent* | *Per cent* | *Per cent* | | |
| 1 | 30 | 40 | 30 | | 520 | 3600 |
| 2 | 30 | 40 | 25 | 5 Mn | 540 | 3500 |
| 3 | 30 | 40 | 25 | 5 Al | 720 | 2700 |
| 4 | 30 | 40 | 26 | 4 Ag | 535 | 3700 |
| 5 | 30 | 40 | 24 | 3 Mn+3 Al | 640 | 3200 |
| 6 | 40 | 30 | 30 | | 315 | 5300 |
| 7 | 40 | 30 | 25 | 5 Al | 510 | 3700 |
| 8 | 40 | 30 | 28 | 2Cr | 410 | 4700 |
| 9 | 40 | 30 | 28 | 2 Vd | 350 | 4750 |

The columns 2, 3 and 4 indicate the percentage of cobalt, copper and nickel, whereas the column 5 indicates the percentage of the other ingredients of the alloy which replace a portion of the nickel in the above-indicated example. The last two columns indicate the values of the coercive force in oersted and the residual magnetism in gauss.

The alloys indicated by way of example were melted in a high-frequency induction furnace and cast in ingot moulds. They were then annealed for 10 hours at a temperature of 1100 degrees Centigrade, quenched in oil and finally heated at a temperature of 650 degrees Centigrade for 4 to 16 hours depending upon the alloy.

WALTER DANNÖHL.
HANS NEUMANN.

Published May 18, 1943

Serial No. 239,432

# ALIEN PROPERTY CUSTODIAN

## SWITCHING REACTOR

Floris Koppelmann, Berlin-Siemensstadt, and Marcel Zühlke, Berlin, Germany; vested in the Alien Property Custodian

Application filed November 8, 1938

The present invention relates to a switching reactor; i. e., to a reactance coil with a magnet core which is connected in series with interrupting devices of any type, preferably with alternating-current interrupting devices so as to facilitate the interruption of the current. The number of turns of such a reactor coil is so chosen that the magnet core consisting in most cases of a particularly high-graded iron, for instance, silicon iron or nickel iron having a high permeability and a sharp saturation bent is unsaturated only at very small instantaneous values of the current in the neighborhood of its zero value and saturates, however, suddenly when the mean value of the normal operating current is exceeded by a fraction, for instance, of the order of magnitude of $\frac{1}{1000}$ so that the current curve is flat in the neighborhood of the zero value of the current so as to result in a practical dead pause during which the interruption of the alternating current may be effected without causing an arcing, particularly if, for instance, a capacitive current path is directly parallel-connected to the switching gap, through which path the current interrupted at the switching gap is at least partially maintained in such a manner that the voltage drop occurs at first substantially at the impedances connected in series with the switching gap, whereas the voltage at the switching gap increases only gradually. Such switching arrangements are disclosed in the copending application Serial No. 114,965, filed December 9, 1936.

An object of the invention is to improve such a switching reactor as to its construction and properties so that it brings about under certain conditions a current weak pause of the desired duration with the smallest possible amount of material and the smallest possible losses and that it maintains the current below a negligible value during this period.

Further objects consist in providing a proper winding insulation for high voltages, in assembling various switching reactors as advantageously as possible, in as convenient an arrangement as possible of useful auxiliary devices and in the proper arrangement in a device for opening and closing alternating-current circuits preferably periodically as well as in the possibility of subsequently adapting electrical conditions brought about by the switching reactor to the mechanical operations when switching the contacts.

A switching device must meet very exacting requirements if it is very often actuated, for instance, periodically. Such periodically operated switching devices are particularly provided in converters for converting alternating current in direct current or vice versa or converting alternating current of one frequency in alternating current of another frequency. These converters perform several millions of switching operations a day. It has hitherto not been possible to design converters with mechanically operated contacts for power current and to operate them for a considerable time, since even in the case of a slight arcing the contacts become useless after a relatively short operating period as a result of the consumption thereof. The use of switching devices with metallic contacts for converts is, however, advantageous, since the voltage and therefore the output losses may be practically completely avoided by the metallic contact during the period of the transmission of current and since a higher efficiency may be obtained than is the case with the known converters operating with gas discharge devices.

To suppress the arcing during the regular operation it is essential that the magnetizing curve of the switching reactor core approach as far as possible the ideal shape; i. e. that the curve in the unsaturated portion be as little as possible inclined with respect to the flux axis; that it present as sharp a saturation bent as possible and that it be as little as possible inclined with respect to the exciting current axis in the saturation zone.

The requirements are considerably different from those which must be met, for instance, by current transformer cores. While a high initial permeability and as small losses as possible are essential in current transformer cores this is not the case with switching reactors. The better the properties of magnet cores for switching reactors, the easier the switching operations will be. This results in an increase of the interrupting capacity and in the possibility of varying the operating conditions at will; for instance, by varying the load, regulating the voltage and the current at the output side and the like.

The desired shape of the magnetizing curve is above all obtained by a suitable composition of the magnetic metal and by a particular mechanical and thermal treatment and subsequent treatment of the semi-finished product or of the finished magnet bodies. Various such methods of manufacture are known in the art. These measures are, however, not sufficient to meet in practice the most exacting requirements. The magnetic properties of the magnet steel are often again impaired by mechanical stresses also, to which the finished magnet body is subjected either by the

working of the material during the subsequent treatment or when arranging the winding or to which the finished switching reactor is subjected by bending or pressing. The same disadvantage results in the finished magnet body if relatively high contact resistances lie in the path of the lines of force owing to the formation of joints when assembling or to an insufficient overlapping of the single layers. Thus, for instance, the overlapping at the four corners of the rectangular winding windows of the known power transformers and power switching reactors is hardly sufficient when manufacturing high-graded switching reactors.

The above-mentioned disadvantages are avoided according to the invention by manufacturing the magnet core of layers of iron ribbon wound flatwise one upon the other. In this manner the essential advantage is at the same time attained in that the lines of force run throughout in the preferred magnetic direction of the iron ribbon which is identical with the direction of rolling or drawing.

It is known to employ, for instance, ring cores of flatwise-wound ribbon in current transformers; however, the magnetic properties required for these devices are, as above mentioned, quite different from those essential to the cores of switching reactors.

In the accompanying drawings are shown various embodiments of the invention.

Figs. 1 to 3 show schematically different forms of ring cores.

Fig. 4 shows the wiring diagram of a converter in which switching reactors of the above-mentioned character are employed.

Figs. 5 to 12 show further improved forms of the switching reactor, and in

Figs. 13 to 15 are shown arrangement in which the switching reactors are provided with additional devices.

Fig. 1 shows a triple-wound ring core consisting of the single bands **51**, **52** and **53**. For the sake of clearness the band **51** is shown as a solid circle to distinguish it from the light solid circles **52** and **53**. It serves as a covering layer and is therefore provided with one more winding than the other two bands. Under circumstances, it may also be somewhat thicker in order to hold the entire body together.

As shown in Fig. 2 the magnet core consists of individual bands **54** to **59**. Each of these six bands has the double length of the ring periphery. Owing to the long overlapping portions the resistance occurring at the joints is negligible. To render the construction uniform it is preferable to displace the joints or the ends of the single bands with respect to one another in uniform angular distances as shown in Fig. 2.

Fig. 3 shows the construction of a core consisting of several rings of smaller radial thickness which are concentrically arranged. **151** denotes the inner ring and **152** the outer ring. Each ring consists of a spirally wound band. However, the rings may also consist each of various single pieces. Between the two part rings **151** and **152** is provided an air space which may be maintained, for instance, by spacers and serves to improve the cooling effect.

In Fig. 4 the cores of the switching reactors are denoted by the reference numeral **5** and their windings by the numeral **4**. They are series-connected with the switching devices **2**, each consisting of two fixed contacts and a removable contact bridge. In parallel to the switching gaps are arranged current paths **3** which include resistance units, preferably a combination of capacitive and ohmic resistances. The movable contact bridges are driven through tappets by an eccentric or cam shaft **8** coupled with a synchronous motor **7**.

The switching arrangement is supplied with energy by the secondary winding **12** of a three-phase transformer whose primary winding **11** is connected to the three-phase supply circuit **10**.

Also the driving motor **7** is supplied with energy by the secondary winding **12**, so that the contact bridges are alternately opened and closed in accordance with the supply voltage by the eccentrics and cams respectively, each spaced 120° from one another. The stator of the synchronous motor **7** may be displaced about the driving shaft by means of the hand wheel **17** so that the moment at which the break is effected may be adjusted to the desired moment within the current weak pause brought about by the switching reactors **4**.

The magnet cores **5** are each provided with an additional winding **6**, by means of which the magnet core may be biased by an additional power source, preferably by a direct-current source, thus influencing the instantaneous value of the current, at which the saturation occurs. The biasing current is taken from a direct-current machine **13** which is also connected to the shaft **8**. The three exciting windings **6** and the reactance coil **16** are connected in series. In this manner, the biasing circuit is kept as far as possible free of harmonics of the current. In this circuit there is also a rheostat **14** by means of which the biasing current may be varied.

**20** denotes the direct-current supply circuit; one pole of the supply circuit is connected to the interrupting devices **2**, whereas the other pole is connected to the neutral point of the secondary winding **12** of the transformer through a reactance coil **9**. The converter may be operated in both directions (alternating current-direct current or direct current-alternating current). By adjusting the rheostat **14** or by actuating the hand wheel **17** it is possible to control the current and voltage at the output side within a given range. By combining both possibilities of regulation a considerable regulating range is attained. If the reactors **4**, **5** are sufficiently dimensioned a gradual transition from one operating direction to the other operating direction, i. e. from the rectifier operation to the inverter operation or vice versa, may be obtained with the aid of the above-mentioned combined control.

The above and below described particular design of the switching reactors may also be advantageously employed in switching arrangements for the individual interruption of power current.

Another object of the invention is to arrange the winding as advantageously as possible on an annular core of the above-mentioned character and to obtain the best possible electrical conditions as to the desired effect and reduction of the unavoidable losses. To this end, the winding consists preferably of various winding branches connected in parallel, whose shape and arrangement on the magnet core are substantially equal. To prevent an increase in resistance by skin effect it is preferable to connect in parallel very many winding branches consisting of relatively thin wires. This has the further advantage in that the winding space is properly utilized at all events in the case of low voltages where the in-

sulation does not play an important part. In the case of ring cores the winding must be subdivided into as equal sectors as possible, in order that the current is uniformly distributed over every winding branch.

Also in the case of high and maximum voltages it is preferable to subdivide the winding at least into two parallel circuits. If the ring core is completely wound in the direction of the core axis commencing at one point of the core the beginning and the end of the winding—between which the full voltage may occur which attains the order of magnitude of the operating voltage in the unsaturated state—would lie close to each other. Either the insulation would encounter at this point great difficulties or a space would have to be left between the beginning and end of the winding of the ring. In this manner, the winding space would be reduced. Furthermore, such a non-uniform winding of the ring would, however, also result in an undesirable increase of the air inductance of the switching reactor in the saturated state, which would not correspond to the purpose of the reactor.

If, however, the winding is subdivided as shown in Fig. 5 into two parallel branches each of which takes up one half of the ring and is wound commencing from a common point A in both directions in the same sense of winding the ends come again together at the common point E lying diametrically opposite to the point A. The ring core is completely wound and both points A and E between which the total voltage may occur lie far apart.

Similar advantageous winding arrangements may be attained when subdividing the winding into an even number of branches; for instance, into four as shown in Fig. 6 or into six as shown in Fig. 7 by arranging the winding branches in pairs in such a manner that the ends of every two coils having the same potential are adjacent to each other.

Under the action of the capacity present between the core and the insulated winding the core assumes a medium potential between the electrical potentials of the winding ends A and E. Consequently, if the voltage is uniformly distributed over the switching reactor there is practical no voltage between the iron core and the center of the winding. Therefore, the center of a part-winding or of a plurality of part-windings may be conductively connected to the iron core as indicated at the points M in Figs. 5 to 7. In this manner even in the case of a non-uniform distribution of voltage as may, for instance, occur upon the approachment of transient waves, an appreciable voltage is prevented from occurring between the center of the winding and the iron core, so that a weaker insulation is permissible at these points in favor of the mechanical structure. Furthermore, the greatest voltage of normal frequency which may occur in operation between the winding and the iron cannot be greater than half the coil voltage.

The effect of the switching reactor is based as above mentioned upon the fact that it takes over practically the total motive potential of the circuit, if the current decreases below a predetermined value which is very small as compared to the load current and therefore does not permit of any current variation within a given time; i. e., within the current-weak pause. If a high-graded iron with a sharp bent of the magnetization curve is employed for the core of the switching reactor, such as, for instance, 50% carbonyl nickel iron or silicon iron with preferably 3 to 4% silicon the voltage is taken over very rapidly owing to the sharp bent of the magnetization curve. However, the winding of each switching reactor has a certain self-capacity, furthermore a certain capacity with respect to the core and earth. An inductance with a parallel-connected capacitor comes therefore first into consideration as a substitute connection diagram of the actual coil. The parallel-connected capacitor retards the increase in voltage of the switching reactor in accordance with the slower charge of the capacitor. Consequently, the capacitor renders at first the switching reactor ineffective. Then follow approximately undamped oscillations caused by the compensating current. The frequency of this compensating process is the higher and the oscillations fade out the quicker, the smaller the parallel capacitor of the substitute connection diagram.

Therefore, the coils on the iron core are preferably so arranged as to have a small self-capacity and a small capacity with respect to the iron core.

In Fig. 10, 5 denotes the circular iron core of the switching reactor, on which is arranged the winding in the form of disk coils 41, 42, 43 etc. This winding arrangement is particularly advantageous not only for the reasons above-mentioned but also because it permits a good utilization of the annular space enclosed by the core and a simultaneous cooling of the winding by spaces between the single coils. The space is still better utilized if the disk coils are given a wedge-shaped cross-section as shown in Fig. 9, in which case the layers lying close to the iron core have a greater number of turns than the outermost layers of each part-coil.

Another way of rendering the copper filling factor of the circular core opening as great as possible consists in the fact that the disk coils are alternately arranged adjacent to each other with a different number of layers and therefore with a different radial height. For instance, according to Fig. 10 every second coil 241, 242, 243 etc. is designed with a smaller radial winding height than the coils 141, 142, 143 etc. lying therebetween. Also three or more different winding heights of the successive disks may naturally be chosen.

The winding formed of disk coils is particularly advantageous to high-voltage switching reactors, since between all points between which there exists a high potential drop, insulating distances are maintained and since by the regular construction a clear field diagram is obtained in contradistinction to such windings in which the turns are wound on the smaller inner periphery of the iron core as close to each other as on the greater outer periphery of the iron core by filling the interstices with wires arranged side by side in the same winding layer on the outer side of the iron core and belonging to different winding layers on the inner side of the core. Owing to the simple construction of the disk coil winding it is then possible to take particular protective measures, for instance, by arranging intermediate layers of solid insulating material at particularly dangerous points where points of a different potential come very close to each other.

Furthermore, the capacity of the switching reactor may be reduced by subdividing the reactor into various part-coils each having its own iron core and by connecting these part-coils in series as is, for instance hereinafter described and shown in connection with Fig. 14. The capacities

of a coil are then connected in series so that the resultant capacity of the winding alone and of the winding with respect to the iron core is very small for the entire switching reactor. There remains only the capacity of the coil to earth or with respect to the oil tank or a corresponding metallic casing. The latter may, however, be kept small by suitably dimensioning the oil tank or casing.

Large core cross-sections as are necessary for the manufacture of switching reactors for systems of considerable capacity may preferably be made by forming the core of various band rings arranged coaxially side by side. In this manner, the core may be made of comparatively narrow bands. Narrow bands having very good magnetic properties required for the desired effect, i. e. a high permeability and a sharp saturation bent, as well as the desired uniformity are easier to manufacture than wide bands. Also in the case of a thermal subsequent treatment a uniform treatment of the structure and therefore of the magnetic properties can only be obtained if the band width does not exceed a predetermined amount, i. e., approximately 3 cm.

Since the magnet core is formed of various band rings it is further possible to give the core cross-section any desired shape other than the rectangular shape.

In Figs. 11 and 12 is shown by way of example a ring core formed of various band rings, Fig. 11 showing a cross-section perpendicular to the axis and Fig. 12 a reduced view of the ring core. The core consists of six individual parts 151 to 156 each having a rectangular cross-section. The heights $h_1$ to $h_6$ and the width $b_1$ to $b_6$ of the individual rings are stepped in such a manner that the total core cross-section has a form on which a round coil winding may be easily arranged and which approaches particularly the circular form.

Suitable spacers are arranged between the single band cores to provide slots for a cooling agent in order to reduce the losses in the ring core to a minimum. The entire coil core is mechanically held by surrounding all part-cores with a covering 160 of insulating material, for instance, of paper which at the same time insulates the winding against the iron core.

In order that the cooling agent may reach the core iron or pass through the cooling slots between the part-rings the covering 160 is provided with openings as will be seen from Fig. 12. If the magnet core is to be completely wound with a winding consisting of two parallel branches and whose beginning A and end E are shown in dotted lines in Fig. 12 the mentioned openings lie preferably diametrically opposite to each other. They must be so arranged that they lie in the central portion of each winding branch. The insulated core assumes a medium potential between the potentials of the winding ends A and E owing to the capacity between the winding and the core. If the voltage is uniformly distributed over the switching reactor practically no voltage or only a relatively small voltage occurs between the iron core and the winding in the neighborhood of the points at which the insulating covering 160 is interrupted so that the reduction of the insulation at these points is permissible and will not give rise to any trouble.

Besides, the center of one or more part-windings may be conductively connected with the iron core. In this manner an appreciable current cannot occur at the free points of the core insulation even in the case of a non-uniform distribution of voltage as often occurs as a result of the transient waves.

If the individual switching reactors are so arranged that their axes are vertical a convenient arrangement is obtained, particularly when connecting various coils in series. If a cooling agent is employed in this case for cooling the core it must flow through the cooling slots in the horizontal direction. The cooling effect obtained thereby is generally sufficient in the case of the small losses of the high-graded kinds of iron as are now produced. A considerable improvement of the cooling effect may, however, be attained without dispensing with the favorable total arrangement by inclining to a slight extent the single coils so that, for instance, their axis forms with the vertical axis an angle of 20 to 30°. The points at which the core insulation is interrupted are placed at the lowest and highest point of the ring core. If the switching reactors are so arranged that the ring axis lies horizontally the core is cooled in the most effective manner. However, difficulties as to the cooling conditions of the winding may arise by the difference in height between the winding portion lying at the lowest and the highest point. Therefore, the arrangement with the substantially vertical coil axis is to be given the preference. If a sufficient dissipation of heat is not obtained in this case by the natural convection the cooling agent may be caused to circulate in order that it may come in heat exchange with the iron core. Another known means for improving the cooling is the use of a liquid or gaseous cooling agent which is more effective than air. The switching reactors may be placed in an oil tank, for instance, together with their supporting frame in the form of a transformer.

As already above mentioned the magnet cores of the switching reactors may be biased by an additional power source, preferably a direct-current power source; in this manner the instantaneous value of the current at which the saturation occurs is influenced.

As hereinafter described the biasing winding may be so arranged that the best possible field conditions are obtained and that at the same time the insulation necessary for high and maximum operating voltages is provided in a simple manner. This is accomplished by arranging the additional exciting winding for the magnetic bias of the iron core in the axis of the magnet core in the form of a rod.

In Fig. 13 is shown a single arrangement of the above-indicated character, Fig. 14 a multiple arrangement with constructional details and Fig. 15 shows schematically a complete set of switching reactors for a three-phase converting system as shown, for instance, in Fig. 4.

In Fig. 13 is shown a sectional view of the switching reactor whose winding 4 completely surrounds the band core 5, preferably wound in the form of a ring. In the axis of the magnet core, i. e., in the center line of the free winding window of the magnet core is arranged a bunch of conductors 6, for instance, consisting of three straight wires or rods. With the aid of the conductors 60 the wires or rods are wound to a coil and connected to the terminals 61 by means of which the coil may be connected to the biasing power source through regulating or stabilizing devices not shown. In the case of a sufficient length of the wires 6 this arrangement has the advantage that the field strength produced by the biasing winding is practically constant along

the magnet core 5 and that a leakage of the induced flux is prevented in the neighborhood of the coil.

Since the voltage induced in the biasing winding will not cause any variations of current the biasing circuit must be stabilized with the aid of reactances. The magnitude of the induced voltage depends upon the voltage occurring at the main winding and which as a rule attains the value of the operating voltage as well as upon the ratio of the number of turns of the main winding to that of the biasing winding. If, for instance, the voltage induced in the main winding is for a given case equal to 100,000 V and the number of turns of the main winding amounts to about 1000 a voltage of 100 V would be induced in a biasing winding of only one turn. Consequently, the number of turns of the biasing winding must be kept small in order that a small amount of insulation is required. It is therefore preferable to use only one turn.

As shown in Fig. 14 this winding may be designed as a central bolt 61 which may be employed for bracing various switching reactors 51, 52, 53 on a supporting frame. The coils 51, 52 and 53 may belong to different phases; however, they may also be part-coils of a single phase in a multiple phase system. The supporting frame consists of a base plate 21 with feet 22, of traverses 23 and of intermediate layers 24. The bolt 61 extends through the center of the traverses and is provided at both ends with washers and nuts. The conductors 60 are secured to the bolt by means of other nuts. Even if only one single switching reactor is separately mounted a central bolt may be advantageously employed both to secure the switching reactor to the supporting frame and to carry the biasing current. This arrangement in which the central bolt simultaneously serves two purposes may also be employed in systems operating at a low voltage.

The whole arrangement may, for instance, be arranged in a tank 75 filled up with oil which enters the tank in a cold state through an inlet valve 73 arranged at the bottom thereof and leaves the same through a valve 74 arranged at the upper end thereof.

The biasing winding is traversed by a relatively large current owing to the small number of windings. The voltage necessary to overcome the ohmic resistances is, however, very low. It is therefore not advisable to supply the biasing winding with energy from a direct-current supply circuit of normal voltage, since the excess voltage must then be neutralized in series-resistors, whereby considerable losses would result. It is therefore advisable to supply the biasing winding with energy from a particular rectifier of low voltage. A small contact rectifier has proved particularly suitable for this purpose, since here no voltage losses result across the switching gaps between the contacts. Since a large reactor is necessary to stabilize the biasing circuit a particular reactance coil is not required for the auxiliary rectifier. Furthermore, it may under circumstances suffice to employ a simple three-phase connection in the auxiliary rectifier instead of a six-phase connection, since for the above-mentioned reasons the ripple of the direct current is slight in itself.

In Fig. 15 is shown a three-phase switching reactor arrangement with such a biasing device in which are provided for each of the three phases three series-connected part-reactors 41, 42, 43; 44, 45, 46 and 47, 48, 49 which are held together by a bolt 61, 62 and 63 respectively. The three bolts are shown series-connected so that the voltages induced in the same are partly neutralized. The influence of the remaining ripple of the induced total voltage is eliminated by the steadying coil 16 which serves at the same time to equalize the direct current supplied by the auxiliary rectifier. The latter operates with contact devices 32 which are connected in series with the auxiliary switching reactors 34. The contact device 32 is driven in synchronism with the supply voltage of the auxiliary rectifier. If the auxiliary rectifier is fed from the secondary winding 72 of a transformer whose primary winding 71 is connected to the same three-phase supply circuit which supplies also the main converter (not shown) with energy it is preferable to couple the driving shaft for the contact device of the auxiliary rectifier with the driving device of the main converter; however, it may also be driven by a particular small synchronous motor.

To control the current and the voltage at the output side of the main converter either the magnetic bias of the switching reactor alone or the position of phase of the contact motion alone may be varied or also both methods of control may be combined. To vary the magnetic bias a series rheostat 14 may be employed, whereas the regulating losses may be avoided by controlling the direct-current voltage in the biasing circuit either by the phase displacement of the drive of the auxiliary rectifier contacts 32 or by another biasing winding on the auxiliary switching reactors 34 or by a combination of both. If the contacts of the auxiliary rectifier are as above mentioned mechanically coupled with those of the main converter a phase displacement of the main contact motion and the corresponding variation of the magnetic bias as a result of the phase displacement of the auxiliary contact motion may simultaneously be attained by only actuating the common drive.

FLORIS KOPPELMANN.
MARCEL ZÜHLKE.

PUBLISHED
MAY 18, 1943.
BY A. P. C.

F. KOPPELMANN ET AL
SWITCHING REACTOR
Filed Nov. 8, 1938

Serial No.
239,432
6 Sheets-Sheet 1

Fig. 4

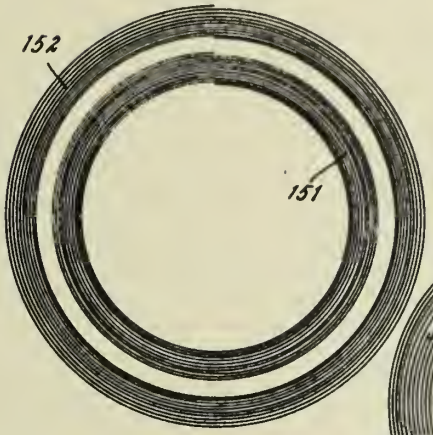


Fig. 3

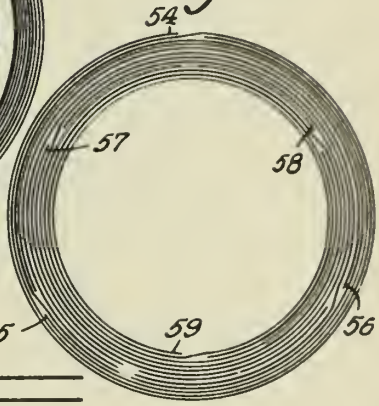


Fig. 1

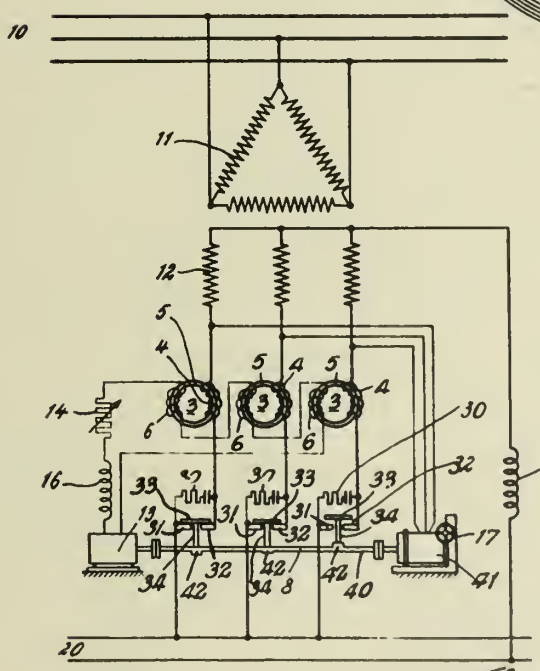


Floris Koppelmann
Marcel Ziphke
Inventors
by Wright Brothers
Attys.

PUBLISHED
MAY 18, 1943.
BY A. P. C.

F. KOPPELMANN ET AL
SWITCHING REACTOR
Filed Nov. 8, 1938

Serial No.
239,432
6 Sheets-Sheet 2

Fig. 5

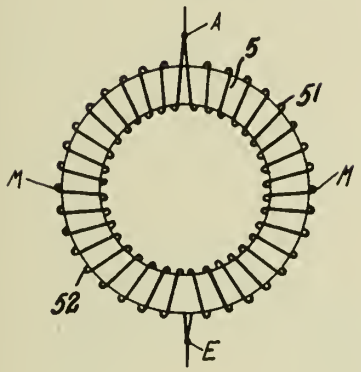


Fig. 6

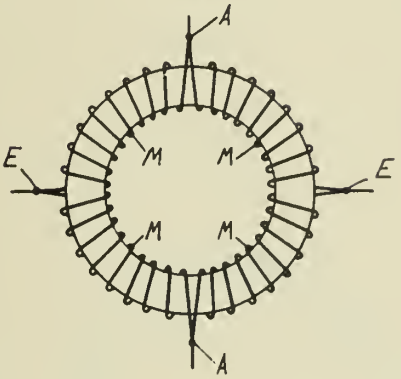


Fig. 7

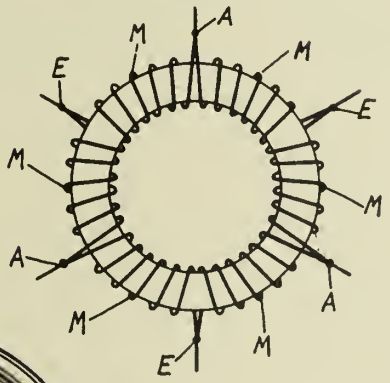


Fig. 2

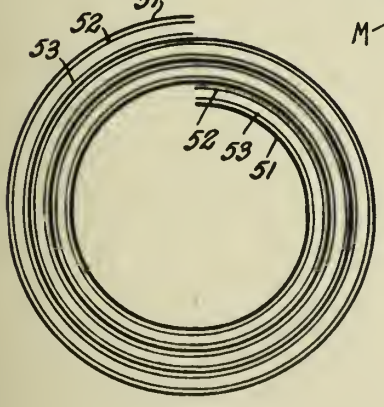


Floris Koppelmann
Marcel Zühlke
Inventors
by Knight Bros
Attys

PUBLISHED
MAY 18, 1943.
BY A. P. C.

F. KOPPELMANN ET AL
SWITCHING REACTOR
Filed Nov. 8, 1938

Serial No.
239,432
6 Sheets-Sheet 3

Canc. Dec. 10, 1941

Fig. 1

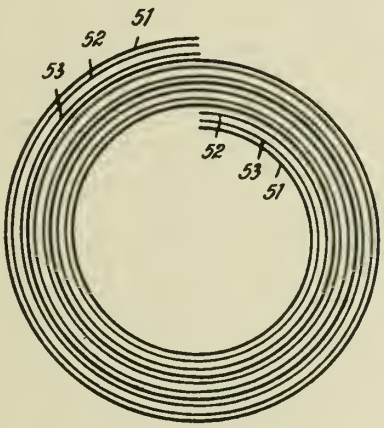


Fig. 2

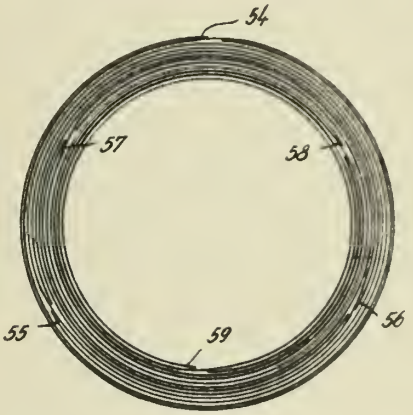


Floris Koppelmann
Marcel Günniker
Inventors
by Knight Bros
Attys.

PUBLISHED
MAY 18, 1943.
BY A. P. C.

F. KOPPELMANN ET AL
SWITCHING REACTOR
Filed Nov. 8, 1938

Serial No.
239,432
6 Sheets-Sheet 4

Canc. Dec 10, 1941

Fig. 8

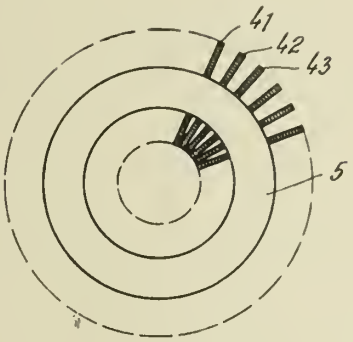


Fig. 9

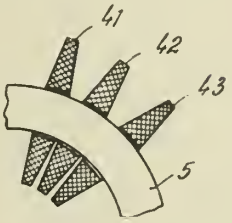


Fig. 10

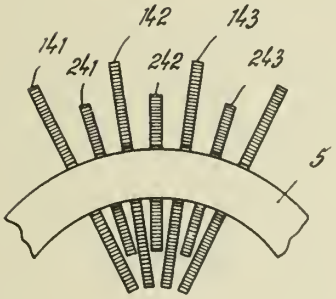


Floris Koppelmann
Marcel Güttke
Inventors
by Knight Bros Attys.

PUBLISHED
MAY 18, 1943.
BY A. P. C.

F. KOPPELMANN ET AL
SWITCHING REACTOR
Filed Nov. 8, 1938

Serial No.
239,432
6 Sheets-Sheet 5

Fig. 11

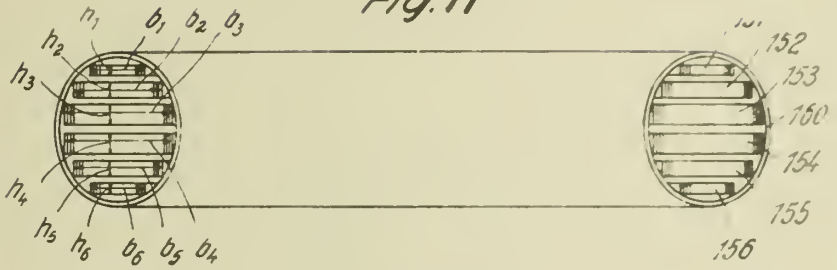


Fig. 12

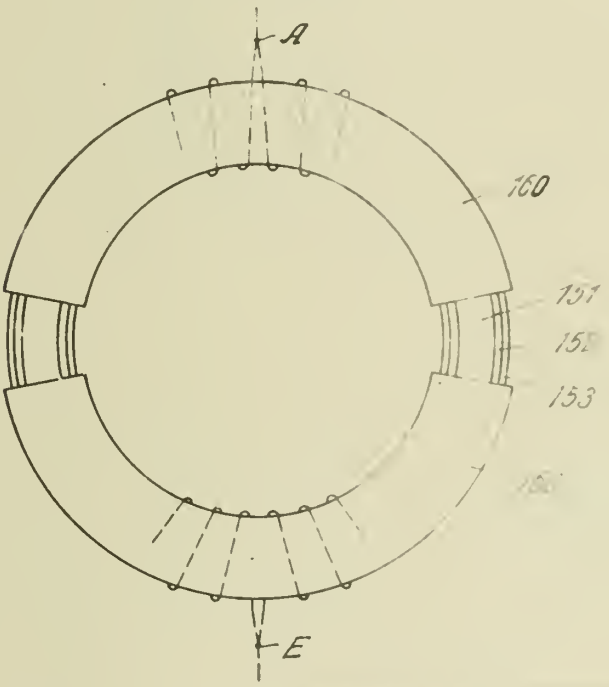


Louis Koppelmann
and al
Inventors
by
Attys

PUBLISHED
MAY 18, 1943.
BY A. P. C.

F. KOPPELMANN ET AL
SWITCHING REACTOR
Filed Nov. 8, 1938

Serial No.
239,432
6 Sheets-Sheet 6

Fig. 13

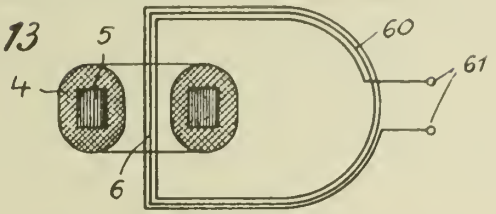


Fig. 14

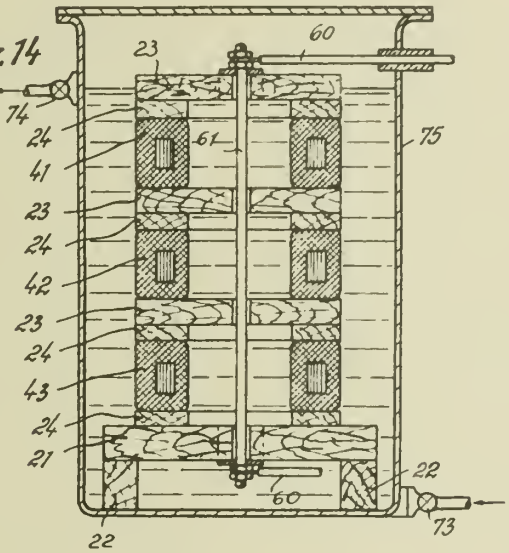


Fig. 15

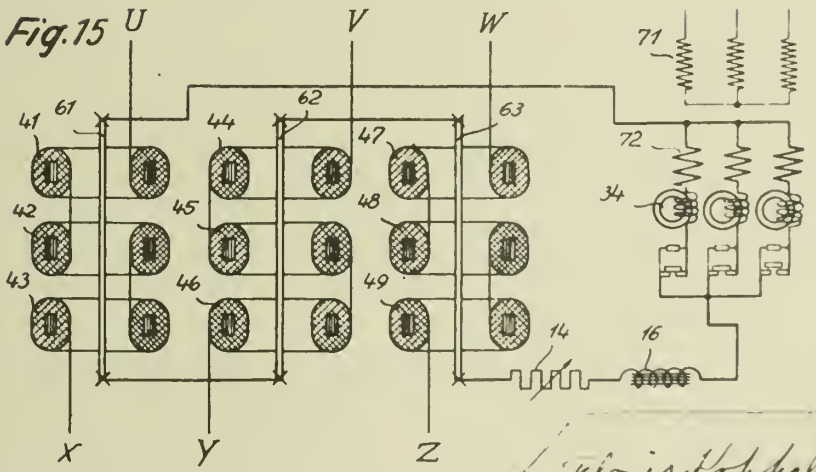


Florio Koppelmann
Marcel Jühlke
Inventors

by Knight Bros
Attys

Published May 18, 1943 Serial No. 242,540

# ALIEN PROPERTY CUSTODIAN

## ELECTRIC DISCHARGE TUBES AND LAMPS AND THEIR MANUFACTURE

Roger Francois Desire Navarre dit Malherbe, Paris, France; vested in the Alien Property Custodian

Application filed November 26, 1938

Two main methods have been used up to now in the manufacture of electric discharge tubes and lamps and particularly of their electrodes.

One of these methods consists in forming the electrodes of these tubes and lamps of ductile metals such as copper, iron, tungsten, molybdenum, aluminium, etc. The critical temperature of these metals being very high, such electrodes have the disadvantage, whatever may be their form (cylindrical, rectilinear stem, or spirally wound stem, grid, etc.), that they localise the place of electronic recombination and disassociation to the most remote point of the electrode. A relatively important potential drop is the result of this, followed by thermic manifestations which cause the ionoplastism of the metals in the presence of the gases occluded in the envelope of the tube or lamp and by reason of this an increase in the desistance to the passage of the discharges is produced.

Having regard to the weight of metal, these electrodes must be insulated from the internal walls of the envelope by various devices such as collars of beads, porcelain, glass, refractory substances etc. or even by a cup which serves to fix the electrodes.

It has been proved that the temperature of the electrodes varies as a function of the amount of current which is imposed upon them, and attempts have consequently been made to increase the metal surface of these electrodes in order proportionately to decrease their temperature. As however the temperature of an electrode varies also as a function of the fall of potential which it produces, experiments which have commenced with the above conclusions lead to the application of a second method.

This second method consists in forming the electrodes of electric discharge tubes and lamps of a base of alkaline or alkaline-earth metals or metals or alloys having a critical temperature below 800° C. The employment of these metals or alloys was considered as advantageous because, on being brought to a fused state by bombardment or by any other thermic process, they were, at the moment of manufacture, coated on to the inner wall of the envelope enclosing the gaseous atmosphere in such a manner that they adhere perfectly to this wall. It is seen from this that any passage between the envelope and the metal would be prevented, which would prevent electronic recombination being produced on the back of the electrode. With this method it is found that the variation in the temperature of the electrodes was practically nil and that their fall in potential was lowered about 80% with respect to that found with the first method set out above.

It has also been proposed to avoid electronic recombination at the back of the electrodes, in the case in which these latter are formed by means of metals or alloys having a critical temperature above 800° C., either by exact adjustment of them in the glass envelope enclosing the gaseous atmosphere or by completely filling the spaces between the metal employed and the envelope with powder or dust of glass, or of one of the materials mentioned above which have a critical temperature below 800° C.

These arrangements, however, excellent in principle, are difficult to produce if not when employing envelopes of special glass resistant to high temperatures at least with envelopes of ordinary glass. In fact at the moment of fusion of the alkaline, alkaline-earth or other metals, these materials damage the envelope in most cases, thus destroying any previous constructional work.

The present invention relates to improvements in electric discharge tubes and lamps having electrodes with a base of alkaline or alkaline-earth metals or metals or alloys capable of permanent or provoked ionic escape and having a low melting point, with a view to overcoming the disadvantages just mentioned whilst making the maximum use of the advantages present in employing the said metals or alloys as against using ductile metals having a high critical temperature.

In accordance with the invention the alkaline, alkaline-earth or other metal forming the electrode, is put into a cup of glass or isothermic material wihch does not discharge vapours or gases capable of disturbing the gaseous atmosphere at the temperatures at which the tube or lamp operates, the said cup being so disposed as to envelop at its base the conductor leading the current into the envelope which encloses the gaseous atmosphere, and to be itself enveloped at its base by the corresponding end of the envelope in order to insure the sealing of the tube or of the lamp through an intimate alloy. At the same time as it prevents the electronic recombination taking place at the back of the electrodes and thus ensures a decrease in potential drop, this arrangement avoids the risk of accidents during manufacture; accidents caused particularly by the adherence on melting of the alkaline, alkaline-earth or other metals to the envelope, and the device permits with certainty the use of ordinary glass for the formation of the whole tube

or lamp and, accordingly of the envelope of the electrodes which terminate them.

The cup enclosing the alkaline, alkaline-earth or other metals will be preferably formed of the same material as the envelope of the electrodes and therefore generally of ordinary glass. However, it is also possible, but without obtaining results of the same characteristic kind, to use, china-ware, refractory earths, glasses of the "pyrex" type, refractory metals and the like. The dimensions (section, thickness, length) of the cup may vary as a function of the result which it is desired to obtain, although it will be convenient to observe in this respect certain general directives which will be disclosed more particularly hereinafter.

The cup may be insulated in various ways on the inside and/or on the outside by means of refractory substances which do not discharge gas or vapours, although this is not absolutely necessary.

According to another improvement forming the subject of the invention, the electrode may be provided with a pointed metal or other hood, fitting into the cup which encloses the alkaline, alkaline-earth or other metal, or this cup may itself have a conical shape, which enables longer lengths of unsectioned tube to be employed, having regard to the increase of power of the discharge which ignition between the points produces.

Other features and advantages of the invention will appear from the description which follows and which refers to the accompanying drawings, in which are shown by way of non-limiting example, various ways of putting the invention into effect.

In the drawings:

Figures 1 to 7 are partial axial sections of electric discharge tubes or lamps provided with different types of electrodes according to the invention;

Figure 8 is a transverse section corresponding with Figure 7;

Figures 9 and 10 are partial axial sections of other modifications;

Figure 11 is a schematic section of an arrangement suitable for fractional distillation in vacuo of alkaline or alkaline-earth metals adapted to form electrodes in accordance with the invention;

Figures 12 to 17 are sections showing different forms of hoods capable of being used for the electrode in a particular application of the invention.

In the example shown in Figure 1, A designates the envelope of the electrode, which is advantageously of ordinary glass, terminating the tube (not shown) which encloses the gaseous atmosphere, and B is the conductor leading current into this envelope. The electrode preferably located vertically, is formed by a glass cup C whose lower end $C_1$ envelopes the conductor B, this end being itself enveloped by the corresponding end $A_1$ of the envelope A. In the cup C is placed the metal or alloy D forming the electrode proper and which, after being brought to a fused state, coats the internal surface of the cup as shown at $D_1$. The conductor B only contacts with the gas inside the cup C and through the intermediary of the metal D.

It has been found that for obtaining the maximum results it is convenient that the cup has an internal section which is approximately equal to the internal section of the body of the tube and preferably somewhat larger than the latter. The thickness of the said cup must be determined while taking into account the various elements which are present in the course of the manufacture, such as: molten metal, an increase of the temperature resulting from the ionic shock caused on the traces of air which are still present for the thermal purification of the internal walls of the tube, and more particularly large differences of dilatation of the materials which are in contact (metal of the conductor, metal of the electrode and the glass which is used). In practice, this thickness may vary between 0.4 mm for small or middle intensities and 0.8 mm for maximum intensities. The length of the cup may be largely calculated, since it defines the electronic surface of the metal which is treated.

In order to protect the cup C, there may be interposed between it and the metal D (Figure 2), a layer of powder, of mica, of glass or any other insulating material which does not discharge vapours or gases at the temperatures at which the tube operates. It is also possible to insulate the cup on the outside, by interposing between it and the wall of the envelope A (Figure 3) a coating E' of mica, glass or similar powder.

One may also insulate the inner walls of the cup C against the destructive action of the metal by a sheet of mica F rolled into cylindrical form (Figure 4), or by a tube of "Pyrex" glass or by any other isothermic material not discharging vapour or gas.

To increase the emission surface of the metal whilst limiting the volume of the envelope, one may increase the number of the cups, as shown in Figure 6 which shows a tube provided with a double cup C—C'. Care must then be taken that the conductor B be in contact with the various surfaces formed by the vaporised metal on the internal and external surfaces of the cups. Instead of employing intermediate cups such as C' (Figures 7 and 8) one may provide a support formed by a sheet G of ductile metal (pure iron, pure copper etc.) which has been carefully degassed, or other isothermic material, rolled into spiral form, being itself supported at its base by the cup C charged with the alkaline, alkaline-earth or other metals. These metals are vaporised during the course of their manufacture simultaneously on the surface of the glass cup C and on the metallic surface of the support G, thus increasing the emission surfaces.

As has been stated above, to improve the power produced by discharge between the points, the electrodes according to the invention may be provided with a conical hood H (Figure 5), open at its end, and fitting into the cup C which encloses the alkaline, alkaline-earth or other metal. This hood may be of glass, insulated or not, or of another substance answering to the conditions above indicated for the cup itself. This arrangement allows tubes of greater length to be employed avoiding the repetition of unsightly sections.

In any case, it is an advantage, before putting the alkaline or alkaline-earth metals into the cup C, to subject them to a fractional distillation in vacuo, in order to free them from traces of oxides and hydrates and from other impurities contained in these metals as normally available in commerce, and which destroy their capability of being used in electric discharge tubes and lamps. For this purpose an apparatus such as that shown in Figure 11 may be used, formed by

a series of vessels I, J, K placed one above the other (of which the number, form and material may be varied at will and at need), communicating with each other and individually connected to a pipe-line L connected with a conduit M leading from a vacuum-pump and joined to the end of the upper vessel I. The lower vessel K is extended into a thin glass stick N. The metal D to be treated is introduced into the vessel I which is heated to a temperature suitable to produce fusion of the metal. The melted metal runs successively into the vessels J and K which are heated also in proportion to this flow. When the fused metal fills the stick N, and after cooling, the stick is cut off and its content is an alkaline or alkaline-earth metal perfectly suited to the use in question.

To enable a better use in electric discharge tubes and lamps to be made of the natural ionic qualities of the alkaline or alkaline-earth metals, two or more of these metals may be intimately combined in proportions which conform to the laws of luminescence. For this purpose it is advantageous to produce the alloys in bulk by means of the fractional distillation process above described, introducing the metals to be alloyed in suitable proportions into the evacuated apparatus. The differences between the critical temperatures of the metals to be combined is balanced by working in vacuo, which, in addition to its use in absorbing vapours and impurities to be eliminated, operates as a compensator. It is thus possible to produce below 100° C, alloys, among others, of sodium and potassium in any desired proportions. In this particular case the potassium reinforces, by means of its high ionic power, the anodic and cathodic qualities of sodium. It will of course be understood, that it is possible to obtain in similar conditions any other alloys of alkaline and alkaline-earth metals.

In the production of electric discharge tubes and lamps provided with electrodes formed in accordance with the invention in order to simultaneously clean the gaseous space and the electrodes, it is possible to proceed in the following manner:

The discharge tube, which is provided with electrodes having been made in the above mentioned manner is connected as usually with a vacuum pump having an output which is sufficient for enabling to rapidly lower the internal pressure of the tube to a value which is lower than 0.0000 1 mm of mercury. During the operation of connecting the tube with the pump, the metal of the electrodes, which has already undergone the preliminary treatment under a vacuum as previously described is molten once more under the vacuum of the tube and when the pressure reaches a value which is sufficiently low, it is vaporized by a sudden raise of the temperature on the walls of the cup which contains it and of the envelope which encloses the latter. The electrode is then definitely formed, the vaporization being automatically limited as a function of the volume of the tube itself to the surface of emission which is necessary for the total ionization of the latter.

The thermal processes which may be used for bringing the metal to these different conditions can be of various kinds. The simplest and the most practical one, besides the heating by induction at a high frequency, consists in heating by an ionic bombardment exchanged between the metals of the electrodes energized with alternating current of a high voltage; the intensity and the voltage varying according to the volume of the gases. Whatever may be the process which is used, the use of alkaline or alkaline-earth metal electrodes permits of considerably lowering the temperature which is to be attained with respect to the temperature which is necessary with electrodes on the base of ductile metals such as copper, iron and the like, even if only the temperature corresponding to the dark red is considered for the latter. On the other hand, during these thermal treatments the presence of the cup of glass or other isothermic material which serves as a support for melting the alkaline, alkaline-earth or other metal until the definitive vaporization of the latter, renders impossible any adherence of the metal to the walls of the enclosure owing to the difference between the internal and external temperatures and simultaneously avoids, in the glass of the envelope, the stresses which are due to different coefficients of dilatation between the glass and the metal which forms the electrode, as well as leakages which may result therefrom and which could trouble the gaseous atmosphere. Furthermore, it permits of the electronic re-combination without any destruction of electrodes, since the portion which is carried forth by the movement of the ion is re-constructed on every cycle.

In accordance with the invention, one may use in electric discharge tubes equipped with electrodes having the characteristics set out above, a pre-ionisation by impact. The pre-ionisation can particularly be produced by means of incandescent filaments mounted within the tube and capable of providing ions of thermic origin animating by their movements the electrode ions at rest or insufficiently animated which may have the effect of lowering the discharge potential within the tube. The entraining movement may also be given by means of intermediate electrodes suitably arranged.

The arrangements according to the invention have a particularly advantageous application in the formation of luminescent discharge tubes. It may be mentioned that the spectral flame of alkaline and alkaline-earth metals, apart from its luminous intensity, is in the neighbourhood of the spectra of luminescent gases. It is moreover possible with these metals, by regulating the metallic vaporisation, to admit into the discharge tubes, intensities which can reach up to two amperes even for a reduced surface and volume of metal, and this without any modification of the light spectrum of the discharge nor exaggerated heating of the electrodes and especially without any accident. In comparison with the electrodes of ductile metals such as copper, iron, etc. the variation in temperature is practically nil. Even for high intensities, the temperature of alkaline or alkaline-earth electrodes does not rise above 100° C, so that the dielectric value of the glass remains constant. On the other hand when using electrodes of ductile metal, when the intensity is increased the temperature may rise to 1000° C and the glass then becomes conductive, which, having regard to the difference of pressure between the interior and exterior of the envelope, causes the glass to crack under the effect of the ignition.

On the other hand, in luminescent tubes employing rare gases, the use of electrodes having a base of alkaline and alkaline-earth metals under the conditions provided by the invention, also makes it possible to decrease the fall in potential whilst maintaining the ionic energy pro-

duced by the luminous emission, thus confirming the works of Wood and Einstein. The starting and working potentials which are used may be lowered by 40% with respect to the potentials which are necessary with the electrodes of ductile metals, which permits of reducing the secondary voltage of the transformers employed. The starting potential is also reduced from a high potential. Furthermore, the ionisation of the gaseous column being prepared by the quality of the metals, is more rapidly obtained as soon as the metals are excited. In accordance with the works of Weinehalt and Bloch the speed and power particularly of the alkaline-earth ions is 80% greater than of those of amorphous metals used in the existing electrodes. The luminous emission moreover which is obtained is more intense, because of the agreement of the spectra in question (rare gases and alkaline or alkaline-earth), the effects of these spectra supplementing one another. Finally the heat given off due to the resistance of the electrodes being practically nil, a more rational use is being made of the lighting current. In all, it is possible to realise on the consumption of current an economy which may reach 50% of the primary of the transformer.

Likewise as a result of the description given above the main disadvantages of the electrodes which normally contribute in reducing the life of the discharge tubes are overcome. In particular the discharge of gaseous atoms joined with metallic atoms into the atmosphere of the tube is made impossible, since the metal of the electrode has, before being finally located in position, been subjected twice to being melted and to a vaporisation in vacuo. The iono-metallic emanation can no longer give place to any liberation so that the purity of the gases is maintained. During the ionic movement moreover a normal exchange of metallic atoms is produced together with, as illustrated above, a reconstruction of the whole of the electrode. Finally the very low temperature of operation of the tubes avoids discharge from the glass walls, which have been moreover thoroughly cleansed during the bombardment of the electrodes. The life of the tubes is therefore considerably increased, without their resistance undergoing any substantial variation whatever may be the length of their life.

Another important advantage of the invention already mentioned above, is the possibility of using, without risk of accident, ordinary glass for the manufacture of the electric discharge tubes. The normal use of ordinary glass avoids the complications of working with special glasses which will resist high temperatures, and makes it possible to have recourse to glasses tinted chemically or naturally thus increasing in considerable proportions the range of colours obtainable.

On the other hand electrodes having a base of alkaline or alkaline-earth metals improved in accordance with the invention lend themselves perfectly to the formation of blue or other coloured tubes, employing a neon or argon atmosphere or any other rarefied gases or atmospheres in the presence of mercury, using certain proper measures for preventing the formation of amalgams between the mercury and the alkaline or alkaline-earth metals. For this purpose it is possible for example to provide a restriction $C_2$ (Figure 9) at the end of the cup C enclosing the alkaline or alkaline-earth metals. Another method consists in providing a soldered double joint 0 (Figure 10) on the middle of the lighted part of the tube. Mercury vapours may be applied to the internal walls of the tube; and to enable the traces of mercury to adhere the internal walls of the tube may be roughened by being slightly attacked with fluorhydric acid. These last mentioned arrangements may advantageously be combined with one or other of the arrangements shown in Figures 9 and 10.

It has also been found that when using as electrodes for the discharge tubes certain alkaline-earth metals which are freed from any trace of impurities, it was possible to re-create, more particularly with an argon atmosphere, the spectral line 2536 of the mercury which it is desired to obtain especially for exciting ultra-violet rays.

The invention is also applicable, with the same advantages, to the production of discharge tubes comprising phosphorescent, fluorescent or opaline glass screens. In this application, in order to avoid transparent spots, the electrodes may be hooded by one or more covers of glass or other isothermic material not giving off gases or vapours and to provide a grid to stop the projected ions and to localise them on the metal of the electrode. Various shapes of hoods may be used for this purpose. Figures 12 to 17 of the accompanying drawings show by way of non-limiting example schematic sections of various forms which may be employed.

In Figure 12 the hood is formed by a simple cover c covering the cup C which encloses the alkaline or alkaline-earth metal. The section of this cover is preferably 2 or 3 mm. greater than that of the cup; its purpose is to gather the projected ions towards the bottom of the electrode at *a*.

In Figure 13 the hood c fits into the cup C and a lip $c_1$ holds it in position.

In Figure 14 the hood c likewise fits into the cup C but it is extended to the bottom thereof and rests on this bottom.

In Figure 15 the hood *c* is replaced by a simple disc *d* for example of mica resting flat on the edge of the cup C, this edge preferably being of irregular section.

Figures 16 and 17 show arrangements similar to those in 12 and 13 but in these figures the hood c is provided at its centre with a hole $c^2$ having inwardly turned lips, in order that the stream of the ions shall not be too broken at high intensities.

Another advantageous application of the invention consists in using Wood's glass tubes or similar tubes, provided with electrodes having a base of alkaline or alkaline-earth metals made in accordance with the arrangements described above, to excite the fluorescence or phosporescence of any materials having such properties. The electric discharge tubes may thus particularly be employed for outlining, framing or decorating objects having a base of or covered with fluorescent or phosphorescent materials.

The improved electric discharge tubes according to the invention may also be advantageously applied to radio. In this case their employment eliminates radiophonic parasites produced by bad contacts and generally observed in ordinary discharge tubes having ductile metal electrodes. Because of the impossibility of intimately combining the elements which normally form these electrodes (for example tungsten with copper or the alloy known as "copper clead" with iron) these elements are simply connected by being

clamped together so that the differences of expansion produced during heat treatment of the electrodes produces retractions and gaps which form parasites by bad contact when the apparatus is operating at a high alternating potential. On the other hand, in tubes provided with electrodes according to the invention, the conductor leading the current to the electrode is in direct contact with the alkaline or alkaline-earth metals, which have been first melted and then vaporised, and this ensures an intimate welding between them and enables all parts of the electrode to be at the same potential. Furthermore the radiophonic troubles produced by electric combination at a distance are eliminated by reason of the adherence of the alkaline or alkaline-earth metals to the walls, avoiding the formation of intermediate electrodes.

Another useful application of the invention lies in the formation of non-filament lamps for lighting purposes using a rare gas atmosphere. The use of ordinary glass for the envelope, ensured by the invention, enables in particular the incorporation into the material of this envelope of fluorescent or phosphorescent colouring materials, which, in combination with mixtures of rare gases and metallic vapours, make it especially possible in a single tube to approximate to daylight as far as the main rays are concerned. One may thus obtain as closely as possible an approximation to the light suitable to the retina of the human eye. By suitably varying the combinations set out above it is possible also to obtain any desired coloured effects, for example for decorative purposes. It has moreover been found with electrodes having an alkaline or alkaline-earth metal base according to the invention that the excited spectra are fog-piercing, so that they may with advantage be employed in lamps for buoys or for signalling purposes. In any case the non-filament lamps having electrodes in accordance with the invention produce an economic light since there is practically no dissipation of energy in heat form.

For a gap of about 5 cm. between the electrodes the starting potential of the lamps with alternating current is about 110 volts, so that these lamps may be used in current distribution networks. This potential may be further lowered if metallic vapours with rare gases are used, but this may produce transparent spots on the walls of the lamps, thus destroying the regularity of the light. These spots can however be avoided by providing points or hoods on the electrodes similar to those described above.

It is to be understood that what has been stated above concerning the possibilities of using ordinary glass does not exclude the possibility of making the tubes and lamps according to the invention of glass of any composition or quality, coloured or not.

Lastly, it is also to be understood that the improvements to electric discharge tubes and lamps forming the subject of the invention are generally applicable both for high frequency purposes and for high potentials. It is also to be noted that the length of the luminous wave would appear to have greater interest in the field of high frequency than in that of high potential. The use of high frequency moreover makes it possible, for low intensities where ionisation by impacts is sufficient, to suppress certain intermediate electrodes required for discharge tubes and lamps operating at high pressure.

ROGER FRANÇOIS DÉSIRÉ NAVARRE
DIT MALHERBE.

PUBLISHED
MAY 18, 1943.
BY A. P. C.

R. F. D. NAVARRE DIT MALHERBE
ELECTRIC DISCHARGE TUBES AND
LAMPS AND THEIR MANUFACTURE
Filed Nov. 26, 1938

Serial No.
242,540

2 Sheets-Sheet 1

Fig. 1

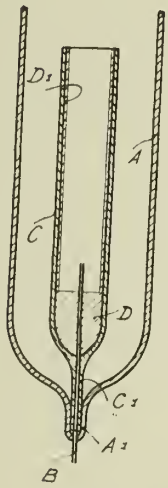


Fig. 2

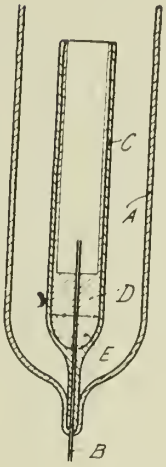


Fig. 3

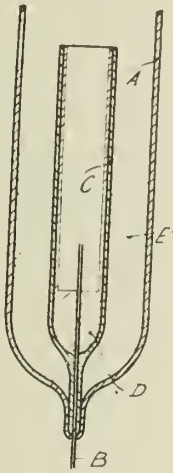


Fig. 4

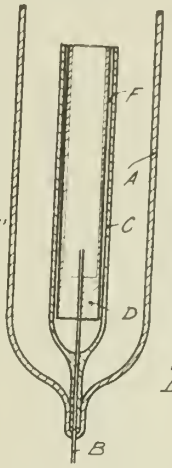


Fig. 5

Fig. 11

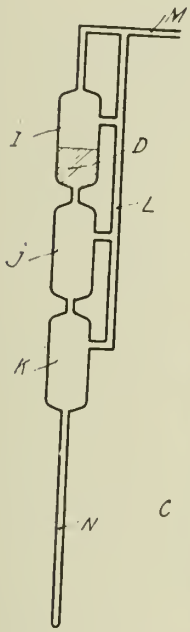


Fig. 10

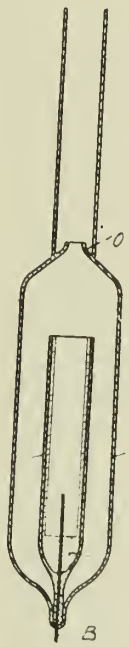


Fig. 9

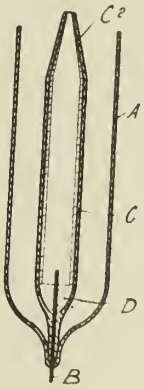


Fig. 7

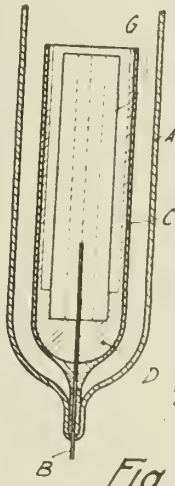


Fig. 6

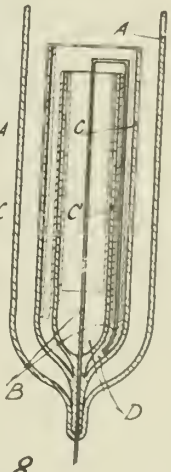


Fig. 8

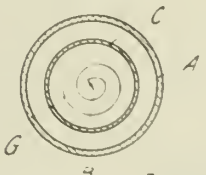


INVENTOR
ROGER FRANCOIS DÉSIRÉ NAVARRE dit MALHERBE
Allen & Allen
ATTORNEYS.

PUBLISHED
MAY 18, 1943.
BY A. P. C.

R. F. D. NAVARRE DIT MALHERBE
ELECTRIC DISCHARGE TUBES AND
LAMPS AND THEIR MANUFACTURE
Filed Nov. 26, 1938

Serial No.
242,540

2 Sheets-Sheet 2

Fig 12

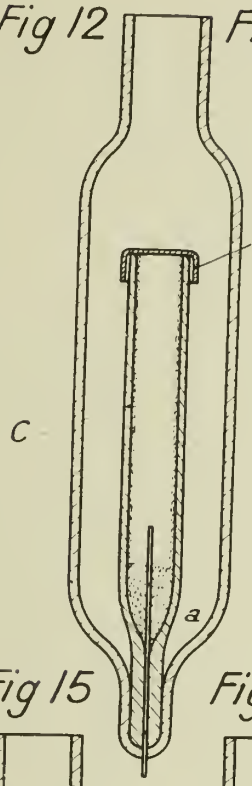


Fig 13

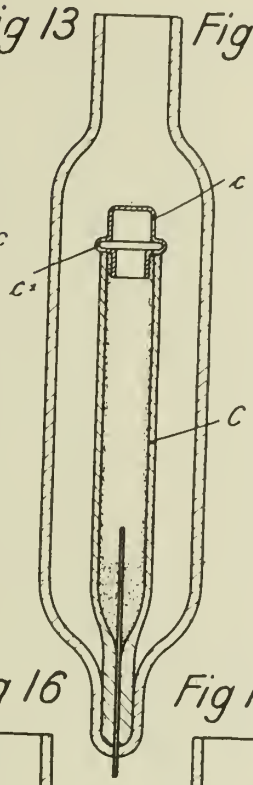


Fig 14

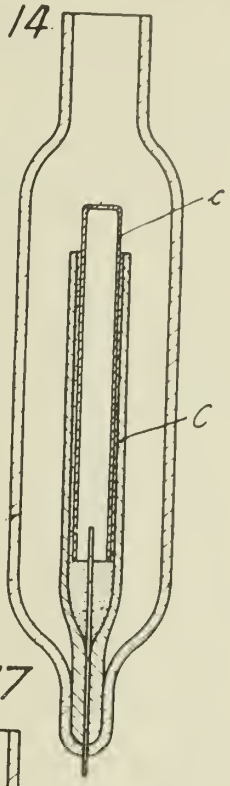


Fig 15

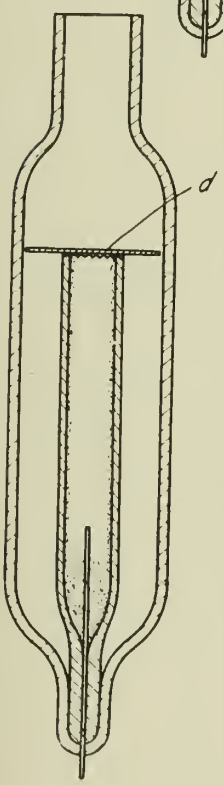


Fig 16

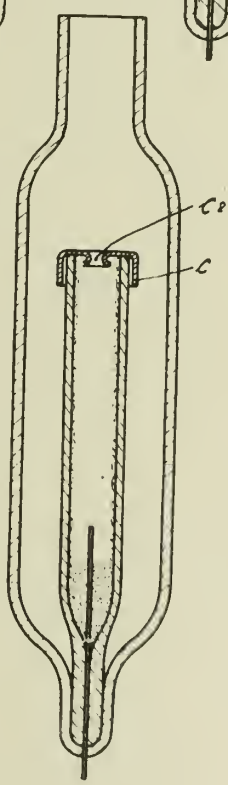


Fig 17

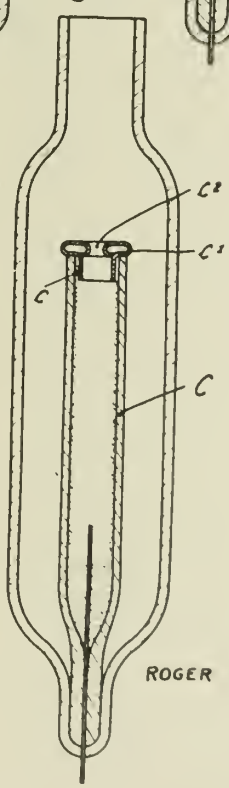


INVENTOR.
ROGER FRANCOIS DÉSIRÉ NAVARRE
dit MALHERBE
Allen & Allen
ATTORNEYS.

Published May 18, 1943 Serial No. 244,159

# ALIEN PROPERTY CUSTODIAN

## DRIVING MECHANISM FOR POWER DRIVEN VEHICLES WITH AUXILIARY GEARING

Max Wagner, Stuttgart, Germany; vested in the Alien Property Custodian

Application filed December 6, 1938

This invention relates to a driving mechanism for power driven vehicles especially for passenger cars with engine and a change gear arranged at the front and an auxiliary gear with permanently meshing gear wheels especially for selectively changing from a direct speed preferably to high speed. Such auxiliary gears have as their object to enable, besides the ordinary speeds, an additional as far as possible silent and easily higher or lower ratio speed which effects primarily a saving of the engine at high travelling speeds. They were hitherto either arranged in a separate case behind the usual change gear or assembled therewith in a common case. As, however, relatively wide and if necessary helical gears, if possible well mounted on both sides were necessary in order to obtain the necessary quiet running, the gear aggregate was very heavy and relatively long.

Owing to the resultant raising of the floor directly in front of the front seats, the freedom of movement of the driver or of the passengers in the front seats was often restricted in an inadvantageous manner; and especially the changing of seats of the persons occuping the front seats was rendered very difficult.

This disadvantage is overcome according to the invention in that, by arranging the auxiliary gear on the rear axle, so much space is rendered free in front of the front seats that the persons occupying the front seats have plenty of room for their feet and can enter the vehicle comfortably. It has already been proposed for other than passenger cars to arrange an additional gear on the back axle. Furthermore in this case no direct gear is provided and the object of the prior proposal is quite another one, apart from further differences.

At the same time the invention presents the advantage that the load on the driven rear axle is increased in desirable manner by arranging the auxiliary gear at the rear end of the vehicle.

The invention is also particularly advantageous for arrangements, in which the rear axle gear is suspended on the chassis, as in this instance, by the rear arrangement of the auxiliary gear, the non spring-supported weight is not increased. If, moreover, the gear case or the gear aggregate is suspended on the chassis with interposed elastic means, such as rubber pads, the noises produced in the gear are at the same time isolated from the chassis in an advantageous manner.

Furthermore, the invention relates to a particularly practical changing and arrangement of the change gear on the rear axle. The change by means of an auxiliary power medium, such as compressed air, presents the advantage that change rod systems extending through the vehicle are avoided.

An embodiment of the invention is illustrated by way of example in the accompanying drawing, in which:—

Fig. 1 shows a vehicle with gear arrangement according to the invention,

Fig. 2 is a longitudinal section through the rear gear block,

Fig. 3 is a section on line A—B of Fig. 2 and

Fig. 4 is a diagrammatic side elevation of the changing mechanism for the rear part of the auxiliary gear.

In Fig. 1 *a* designates the chassis, *b* the engine, *c* a flywheel with clutch, *d* an ordinary, for example 3 or 4 speed change gear, in which the gear wheels are constructed as sliding wheels and shifted in the usual manner by a change speed lever *e*. The drive is transmitted from the change gear *d* by a cardan shaft *f* to the rear auxiliary gear *g* which is combined with the differential or rear axle drive *h* to form a casing block and suspended therewith on transverse girders *k* of the chassis by means of three case lugs *i*. The suspension is effected by means of rubber pads *l* and by a fixation bolt *m* extending therethrough which at the same time is maintaining the rubber pads under a certain precompression.

The rear wheels may either be mounted on a rigid axle when the drive is effected by the axle gear *h* preferably by cardan shafts, or independently guided. In the latter case oscillatable half axles are preferably provided.

As can be seen, by displacing towards the rear the part of the change gear forming the auxiliary gear *g*, the front change gear *d* is considerably shortened so that the space directly in front of the front seats is as far as possible free from all obstructing case- and floor parts, whereas the arrangement of the auxiliary gear *g* in front of the rear axle and behind or below the rear seats *o* is either not at all or at least much less disturbing.

The construction of the rear gear block is shown in detail in Figs. 2 and 3. The gear shaft *p* is driven by the cardan shaft *f* through the intermediary of a joint. Coaxial with this gear shaft *p* is a pinion shaft *q* carrying a pinion *s* driving the crown wheel *r* (bevel wheel) of the differential (not shown). Concentric with the shaft *p* a gear wheel *t* is journalled on both sides in the case *g* and permanently meshes with the gear wheel *u* on a counter shaft *v*. The gear

wheel $w$ on the counter shaft $v$ meshes permanently with the gear wheel $x$, permanently meshing with the gear wheel $w$ and journalled on both sides, is keyed on the pinion shaft $q$. All the gear wheels have helical teeth. A selector sleeve $y$, splined shiftably on the shaft $p$ and provided on both sides with repelling claws $z$ bevelled on one side in the peripheral direction, serves for selectively engaging the two speeds formed by the gear in that these claws can couple either the gear wheel $t$ or the gear wheel $x$ with the shaft $p$. As the gear wheels $t$, $u$, $w$ and $x$ are permanently in driving connection with the rear wheels a considerably easier changing is attained, especially in the case of viscous gear oil.

The selector sleeve $y$ is shown in the drawing in a neutral intermediate position. However, a change device is preferably used which effects a shifting of the sleeve without intermediate inoperative position. Such a device is shown in Figs. 3 and 4.

Herein 1 designates a source of pressure medium of any desired kind, for example a container of compressed air, an accumulator adapted to be connected to the compression chamber of the engine, a compressor or the like. By means of an adjustable cock 2 the pressure medium is fed selectively to the right or left side of the piston 3 in the cylinder 4 for compressed air so that the piston moves towards the left or right as illustrated. By a lever 5, a shaft 6, a second lever 7 and through the intermediary of a suitable intermediate rod system the movement of the piston is transmitted to a cylindrical two-armed lever 9 oscillatable about a pin 8, and in which a roller 11 actuated upon by a spring 10 accommodated in the lever is mounted. The spring 10 presses the roller 11 against a cam 12 which is keyed on the shaft 13 and rigidly connected thereby to a fork 14 which serves for shifting the selector sleeve $y$.

The pressure cylinder 4 and the selector device 7 to 12 are arranged on opposite sides of the gear case this resulting in an advantageous (approximately symmetrical) structural arrangement.

In the position illustrated in Fig. 4 the selector sleeve $y$ couples the shaft $p$ with the gear wheel $x$ so that a direct speed is engaged. If the cock 2 is swung to the right, the piston 3 moves towards the right with the result that the levers 5—7 and 9 are swung in clockwise direction. The roller 11 at the same time runs towards the right on the cam 12 the spring 10 being compressed, and the lever 14 or the sleeve $y$ tends to move towards the left. The change over takes place automatically as soon as the driving moment on the claws 7 decreases, for example owing to the throttling of the engine. Owing to the claws being bevelled, they mutually repel one another until the speed of the shaft $p$ and of the gear wheel $t$ have become uniform and the relative rotation begins to reverse. At this moment the high speed transmission $t/u—w/x$ is engaged.

If desired, the auxiliary gear arranged on the rear axle may be controlled mechanically or for example by the same lever as the front change gear $d$. The changing of both gears $d$ and $g$ may also be effected pneumatically, hydraulically, electrically or in some other suitable manner. The auxiliary gear may also be arranged within a rigid axle swinging together with the wheels.

MAX WAGNER.

PUBLISHED
MAY 18, 1943.
BY A. P. C.

M. WAGNER
DRIVING MECHANISM FOR POWER DRIVEN VEHICLES WITH AUXILIARY GEARING
Filed Dec. 6, 1938

Serial No.
244,159

Fig. 1.

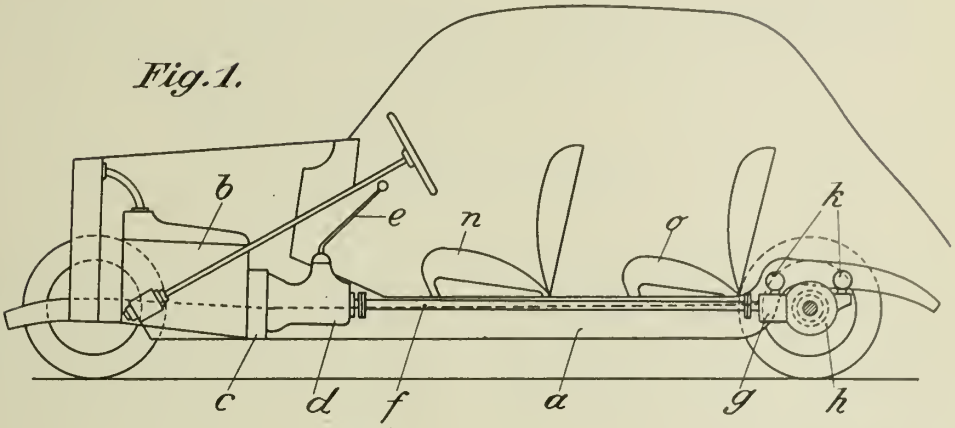


Fig. 2.

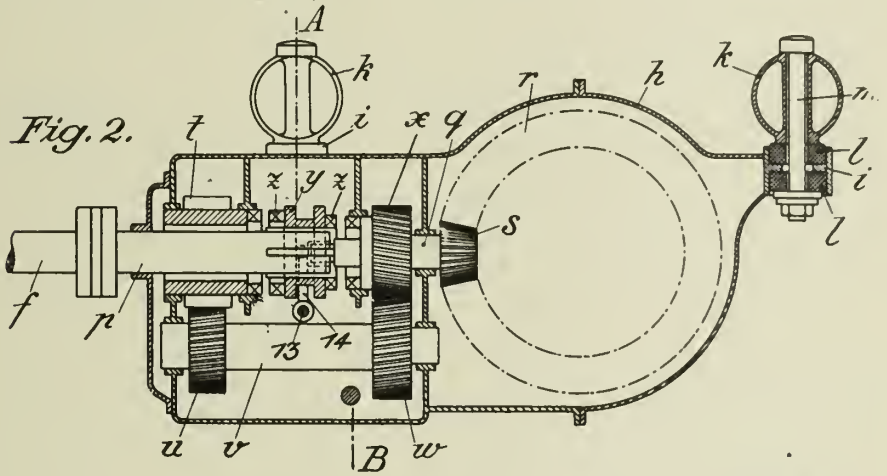


Fig. 3.

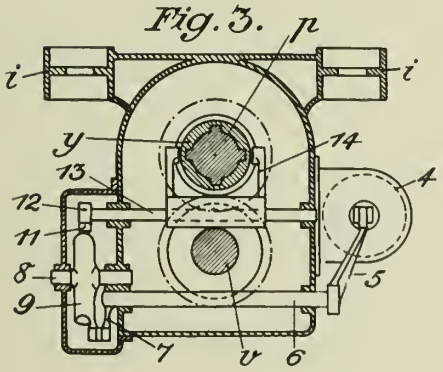


Fig. 4.

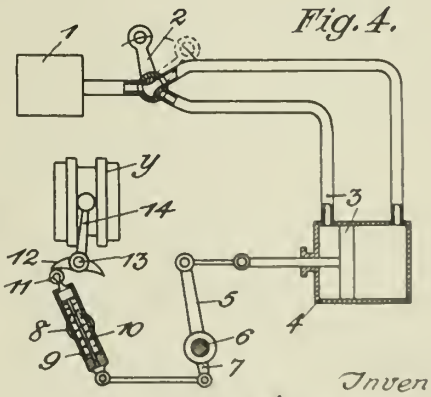


Inventor:
Max Wagner
By Haseltine, Lake & Co
Attorneys

Published May 18, 1943 Serial No. 245,310

# ALIEN PROPERTY CUSTODIAN

## PROCESS FOR PREPARING ARSENATES BY ANODIC OXIDATION OF SALTS OF ARSENIOUS ACID

Leo Löwenstein, Berlin-Wilmersdorf, Germany; vested in the Alien Property Custodian

Application filed December 12, 1938

It has been found in the electrolytic preparation of arsenate solutions that the yield figures vary according to the nature of the arsenite employed. Thus for example in the case of the electrolytic production of sodium arsenate or potassium arsenate the yields are as low as up to 40% and less, according to the nature of the starting product. Even when heating, the tensions rise strongly up to round about one third of the total tension.

It has now been found that it is possible to operate with raw substances of any origin with obtention of almost theoretical current yields and employing relatively low tensions if operations are carried out in the following manner:

To the anolyte are added soluble compounds of metals which are capable of several oxidation stages. For example additions of chromium, iron, lead, manganese and the like may be used. These metals were present in a quantity of the order of 1 g. per 100 ccs. of solution, and even in smaller concentration. However, only those metals may be used which are not precipitated out by the anolytes coming into question.

It has also been found that these metals possess varying degrees of efficiency. It was found that for example chromium is particularly effective, whilst iron is less so, and lead still less.

*Example.*—In an electrolyser with diaphragms there is a 15% caustic soda solution in the cathode space whilst the anode space contains a 19% sodium arsenite solution. Electrolysis was carried out at a temperature of 60° C. No solid salt separates out. The sodium arsenite had been produced by dissolution of commercial arsenic in caustic soda solution. The current yield amounts to approximately 50%. Similar results are obtained if potassium arsenate is prepared in the same way from the same arsenic.

If now the electrolysis is carried out in the same way with addition of dichromate to the anolyte, so that there are 0.2 g. of dichromate in 100 ccs., then the yield amounts to more than 98%.

Whereas without this addition the tensions vary approximately from 2.7–3.1 volts, after the above addition of dichromate they amount at the same temperature to approximately 2.2–2.5 volts.

No dichromate was contained in the arsenate crystallising out on cooling down. The dichromate remained completely in the mother liquor, which was returned to the electrolysis.

It has been found that the apparatus shown in the accompanying drawing is particularly suitable for carrying out the electrolysis.

Referring to the drawing the anode 3 and the cathode 1 consist of wire net of a suitable metal, more particularly nickel. These nets close off the anode space and cathode space and are separated from one another by means of a diaphragm, for which asbestos paper has proved to be the most suitable. The two nets are then pressed against some layers of asbestos paper 2 separating them. Electrolysis is now carried out in accordance with the example given above. The nickel sheets 1*a* and 3*a* serve for supplying the current. The anode lead consisting of nickel sheet is indicated by 5 and the cathode lead, likewise consisting of nickel sheet, is indicated by 6. 7 represents a wood block, e. g. disc-shaped. 8 represents a nickel sheet running round the interior in the form of a ring, whilst 9 indicates a nickel sheet running round the exterior in the form of a ring.

It has been found that after fairly prolonged use some arsenic salt solution also reaches the cathode and is there reduced to metallic arsenic. This floats in the cathode space in the form of dark particles and can be readily removed from this space by circulation of the katholyte. It may be avoided if a continuous small flow of katholyte into the anode space is provided for by having a somewhat higher level for the katholyte, amounting approximately to about 1 cm. This also has the effect that on crystallising out the arsenate this comes out further than in the less alkaline solution.

A cylindrical form for the cell has proved to be very advantageous. On a wire cylinder first of all several layers of asbestos paper are wound and then a further wire cylinder is slipped thereover. One end of the two cylinders is closed, e. g. by means of a round disc of gauze or wire netting, between which end pieces there is a disc of asbestos. A suitable number of such cells (10, 16, 20 or more connected in parallel) are placed closely together in a box 4 (electrolyser) of nickled iron sheet.

In a cell of this kind for 100 amperes with which the inventor has worked, the inner gauze cylinder was 75 cm. high and the outer gauze cylinder 73.5 cm. high. The internal diameters of the inner and outer cylinders amounted to 20 and 20.5 cm. respectively. Each cylinder had a gauze bottom. The current lead 1*a* was 5 cm. wide, 48 cm. long and 0.5 mm. thick; the current lead 3*a* had the same dimensions. The leads 5 and 6 were each 5 cm. wide and 1 mm. thick, the

nickel sheets 8 and 9 each 4 cm. wide and 1 mm. thick. In between the two cylinders there were several layers of asbestos paper. The current yield of practical continuous working with such a cell was not below 98%, the voltage 2.2. The dichromate in the anolyte was maintained at 1.6%. The dichromate in the anolyte coming from the electrolyser did not in the crystallising vessel go into the crystallising arsenate but remained wholly in the mother liquor.

Whilst in the foregoing dimensions have been given of a cell which the inventor has himself used, it is to be distinctly understood that the invention is not limited to cells of these particular dimensions.

LEO LÖWENSTEIN.

PUBLISHED
MAY 18, 1943.
BY A. P. C.

L. LÖWENSTEIN
PROCESS FOR PREPARING ARSENATES BY ANODIC OXIDATION OF SALTS OF ARSENIOUS ACID
Filed Dec. 12, 1938

Serial No.
245,310

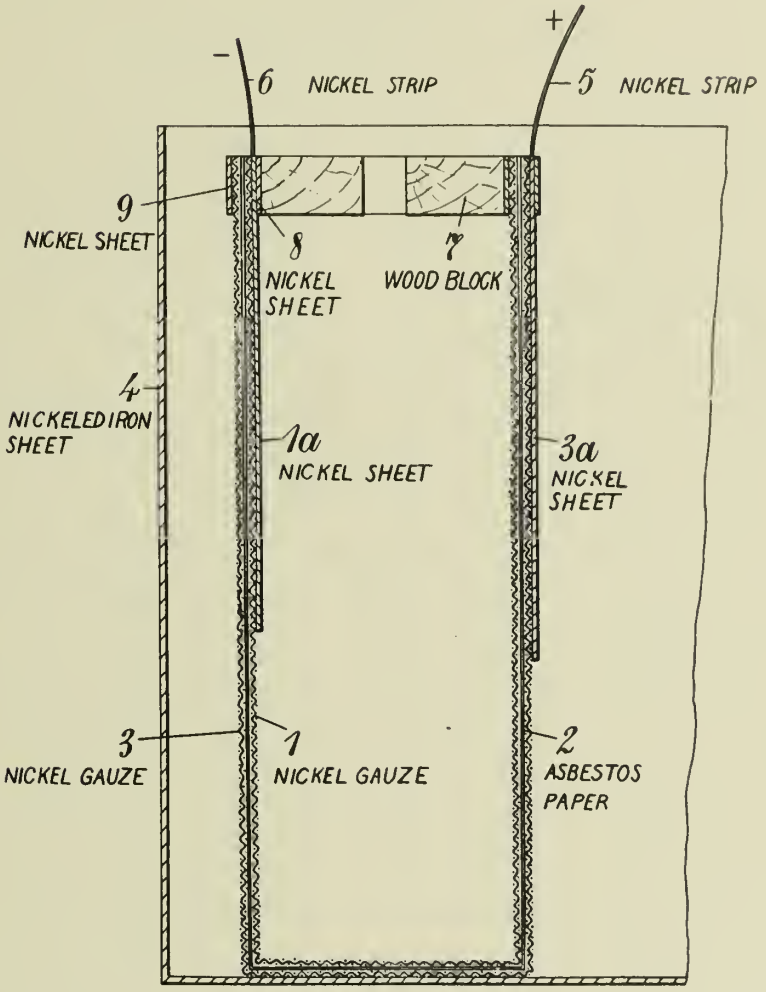


L. Löwenstein
Inventor

By: Glascock Downing & Seebold
Attys

Published May 18, 1943 Serial No. 246,063

# ALIEN PROPERTY CUSTODIAN

## PROCESS OF PREPARING ZINC AND CHLORINE

Ernst Kuss, Hans Hohn, and Fritz Stietzel, Duisburg, Germany; vested in the Alien Property Custodian

No Drawing. Application filed December 16, 1938

This invention relates to the manufacture of zinc and chlorine by lixiviating chlorinated roasted zinc sulfide-containing materials.

Zinc and chlorine have already been obtained from the solutions resulting from the lixiviation of chlorinated roasted zinc sulfide-containing materials when subjecting the solutions after an intense purification to an electrolysis while using diaphragms. This process has not found any technical application for the following reasons:

The strongly electro-negative character of the zinc causes many troubles in the electrolysis, especially when impure solutions are used. Especially the electrolysis of zinc chloride solutions suffers from these troubles having an impairing effect on the yield. In this case especially iron and dissolved chlorine have a detrimental effect on the current yield. It has been tried to avoid these troubles by the use of diaphragms, the use of which, however, is connected with some disadvantages.

In accordance with the present invention we have found that it is unnecessary to proceed as mentioned above, i. e. to completely purify the solutions and to use diaphragms if carrying out the electrolysis with a mercury cathode. According to the invention zinc and chlorine are obtained from solutions, resulting from the lixiviation of chlorinated roasted zinc sulfide-containing materials while subjecting the solutions to the usual purification, by electrolyzing the zinc alkali metal chloride solution thus obtained while using a mercury cathode, by carrying away the chlorine evolved as gas and by separating the zinc from the amalgam produced.

As zinc sulfide-containing materials the cheap zinc-containing roasted pyrites can be used, which are obtained in large amounts in the manufacture of sulfuric acid. It is also possible to use zinc blends which are preferably mixed with roasted pyrites or other materials poor in zinc, the decomposition under these conditions being more complete and less subjected to troubles. This procedure also makes it possible to work up complex zinc ores, for instance complex lead-zinc ores, which generally are found connected with pyrites. The roasting process can be carried out in the usual manner. For the grade of purity of the solutions the required purity of the zinc obtained in the electrolysis is decisive, not the consideration of the current-yields, since slight impurities hardly diminish the current-yields in contradistinction to the working with solid cathodes. For instance, when electrolyzing a solution with about 20 mgrs Fe, 20 mgrs Co and 10 mgrs. Ni to 100 grs Zn, which according to former methods impossibly could be worked up, there is obtained by the use of a mercury cathode at a nearly theoretical current-yield a zinc having a purity of 99.98%. The purification, for instance, may take place in the following rather simple way: By cementation with iron copper and the noble metals are separated from the solutions, the sodium sulfate is separated by cooling, iron, cobalt, manganese, arsenic, antimony etc. are precipitated by means of lime while oxidizing at the same time by means of chlorine at a pH beneath 6. As a result of this purification there are obtained zinc chloride solutions, containing alkali metal chloride as well as magnesium- and calcium-chloride. They are well suited for the electrolysis. The electrolysis by means of mercury cathodes can be carried out in the apparatus generally used in the industry. It is possible to work at room as well as at high temperatures. It is advisable to proceed in that way that the amalgam thus obtained stays capable of flowing. The mercury is led in the same direction together with the solution through the cells. The zinc amalgam can be worked up electrolytically as well as thermally; it is advantageous to dissociate it by stages. The dissociation can take place in vacuo. The apparatus may work continuously or discontinuously. The mercury may be led in a closed circuit. Advantageously the amalgam is worked up continuously. While in the course of the known processes the exchange of the cathodes and the removing of the zinc plates do not allow an absolute continuous working, it is, on the other hand, possible to lead amalgam and the solution in a continuous stream through the cells when using mercury cathodes, without making it necessary to temporarily interrupt the working of the cells. In case the mercury is separated by distillation, this partial process in the same way as the process in question can be carried out continuously until the zinc is capable of being cast.

The invention is illustrated by the following examples:

*Example 1*

Roasted pyrites of 57.10% Fe, 1.99% Cu, 2.39% Zn, 240 gms/ton Co, 300 gms/ton Mn, 0.04% Sb, 3.45% S, 0.11% As, 1.40% Pb, 4.05% $SiO_2$, 62.0 gms/ton Ag, 1.02 gms/ton Au are after addition of 10% of sodium chloride, chlorinatingly roasted and lixiviated to produce a solution. This solution is decoppered by means of scrap iron and

cooled to 0° C. to effect the removal of the bulk of the sodium sulfate. The remainder of the sulfur together with Fe, As, Sb, Mn and Co are precipitated by means of lime while simultaneously introducing chlorine at a pH of 5.5. After filtration there is obtained a zinc chloride solution rich in sodium chloride, which contains magnesium- and calcium-chloride in small amounts. The zinc content amounts to 60 gms/liter. The solution is electrolyzed in cells, which are similar to the cells used in alkali metal chloride electrolysis, at a temperature of 70° C. and a current density of 1200 amp/$m^2$. The electrolyte leaves the cells with a content of about 20 grams of zinc per liter. This zinc is precipitated with lime and the zinc hydroxide obtained is utilized in lieu of the calcium compound for the purification of the initial solution. The obtained chlorine gas is purified in the usual manner, dried and condensed. There is obtained an amalgam containing 4.5% of zinc, from which the mercury is distilled off. The zinc obtained is drawn off into casting molds; it has a purity of 99.95%.

*Example 2*

Roasted Meggen pyrites are mixed with copper containing roasted pyrites in a proportion of 1:1. The mixture contains 53.00% Fe, 0.55% Cu, 5.20% Zn, 240 gms/ton Co, 750 gm/ton Mn, 0.04% Sb, 0.14% As, 0.53% Pb, 8.30% $SiO_2$, 3.95% S, 25.00 gms/ton Ag, 0.82 gms/ton Au. Sodium chloride in an amount of 12% is added to the mixture and accordingly to the method of Example 1 a zinc solution containing 65 grams of zinc per liter is obtained. This solution is electrolyzed at a temperature of about 75° C. with a current density of 800 amperes per square meter while using amalgam cathodes. An amalgam containing 5% of zinc is produced in the electrolysis. Further treatment is effected in the manner described above.

*Example 3*

A concentrate of zinc-lead-ore, which has been obtained by flotation, is mixed with the 24 fold quantity of roasted pyrites. The mixture then contains 57.90% Fe, 0.84% Cu, 3.57% Zn, 200 gms/ton Co, 15 gms/ton Ni, 20 gms/ton Cd, 300 gms/ton Mn, 0.04% Sb, 0.09% As, 2.18 Pb, 4.95% $SiO_2$, 3.20% S, 49.0 gms/ton Ag, 1.26 gms/ton Au. It is mixed with 12% of sodium chloride and converted to a zinc solution in the manner described in Example 1. The solution is then subjected to cementation with zinc dust to precipitate the metals more electro-positive than zinc. The solution now has a zinc content of 65 gms per liter. By electrolyzing at a temperature of 60° C. and with a current density of 1000 amperes per square meter an amalgam containing 3.5% of zinc is produced. By working up the amalgam according to the method of Example 1, zinc having a purity of 99.995% is obtained.

ERNST KUSS.
HANS HOHN.
FRITZ STIETZEL.

Published May 18, 1943 Serial No. 246,302

# ALIEN PROPERTY CUSTODIAN

## VOLTAGE-REGULATING TRANSFORMERS

Helmut Böhm, Nurnberg, Germany; vested in the Alien Property Custodian

Application filed December 17, 1938

Transformer arrangements of the kind having iron cores of the multi-leg or so-called ladder type are known in which a premagnetization effected by unidirectional current acts to displace the magnetic fluxes from one leg or cross bar of such core to flow through another of the legs, a voltage regulation being obtained in this way. In all of these arrangements this voltage regulation is effected either by the difference of magnetic fluxes or by means of opposing windings. For instance, the arrangement may be such that the voltages of two transformer windings, coiled around separate legs of the core, may be made to neutralize one another. By a premagnetization imparted to the second leg the magnetic flux is displaced in a manner to flow through a third leg not provided with a winding. The opposing voltage of the second leg is hereby caused to decrease in accordance with the premagnetization effected by the unidirectional current increasing, whereby the voltage effective in the winding of the first leg will preponderate increasingly. The alternating voltage to be regulated may thus be made to grow in a manner to assume a predetermined value. However, the range of regulation cannot be raised at will, being limited by the magnetic conditions of the iron core. The use of opposing windings entails the great disadvantage of augmenting the ohmic drop of potential, thus neutralizing in part the obtained increase of voltage. In addition the main winding must be made to accommodate a certain excess of voltage since the decrease of voltage in the opposing winding is variable by about 30 per cent. By increasing the number of turns beyond what is necessary per se the influence of the leakage voltage increases, that is, the voltage which in cooperation with the ohmic resistance acts to annul in part the obtained increase of voltage. Furthermore, the application of opposing windings also requires an accordingly larger-sized type of transformer to be employed, a fact which considerably adds to the first cost. The invention does away with the use of opposing windings or opposing magnetic fluxes. In arrangements as provided by the invention the displacement of the fluxes only acts to effect an increase of voltage.

In the accompanying drawing, Fig. 1 is a diagrammatic view of one embodiment of the invention, Fig. 2 is a view similar to Fig. 1 and illustrating a second embodiment thereof, Fig. 3 is a graphic representation that serves to explain the operation of the embodiment shown in Fig. 2.

Transformers of the type here disclosed have an iron core which comprises three legs or cross bars *a*, *b*, *c*, Figs. 1 and 2. For the purpose of explaining the invention this core be assumed to be without leakage. The mid-leg *b* carries the primary *p* of the transformer. This winding is connected to the alternating current network I. The leg *c* is provided with the secondary *s* of the transformer, that is, the winding to be joined to a load indicated by II. This load may be any resistance, for instance.

Leg *a* shown in Fig. 1 carries a winding *t* connected to a direct current source represented by the symbol *d*.

Leg *a* represented in Fig. 2 has its winding *t* connected with a condenser *e*.

If no currents are flowing in the windings *t*, *s* then the magnetic flux produced in leg *b* by winding *p* will be symmetrically distributed, equal parts thereof flowing through the legs *a*, *c*. Therefore, if the windings *t*, *s* have the same number of turns than in the case of no load the voltage of leg *a* and that of leg *c* would be half the voltage of leg *b*. If however load II is joined to winding *s* then almost the entire magnetic flux, produced in the leg *b* by winding *p*, will be caused to flow through leg *a* since every load, however small it may be, when connected to winding *s* acts to disturb the equilibrium of the flux distribution.

If now a unidirectional current, indicated by the symbol *d*, Fig. 1, is supplied to winding *t* the magnetic resistance of leg *a* will considerably increase with increasing unidirectional current. As a result, the magnetic flux produced in leg *b* is displaced to flow mainly through leg *c*, whereby the voltage in winding *s* is increased.

In the case of rectifiers as the load connected to winding *s* the unidirectional current so generated may be supplied to winding *t* in order to serve here as a premagnetizing current. In this way not only the drop of potential across the rectifier device may be compensated but at the same time an ascending or a descending or, if desired, a curved voltage-current characteristic may be obtained.

The flux displacement may however be effected by still other means, such for instance as condenser *e*, Fig. 2. The apparent power output of this condenser must be in a certain ratio to the desired useful output. If load II is increased the voltage effective in winding *s* likewise increases. An increase of voltage up to 30 per cent or a still greater increase may be obtained by dimensioning the respective parts accordingly.

This arrangement may of course be employed also for the operation of rectifiers in order on the

one hand to compensate the internal drop of potential while on the other hand insuring either an ascending or a descending or a curved voltage-current characteristic to be obtained.

The use of condensers for effecting the flux displacement entails still another advantage, namely, that the voltage can only be increased up to a certain value. In fact, in the case of overload the voltage suddenly decreases toward the zero value, without the maximum value of the loading current being exceeded, as will be understood from Fig. 3. The arrangement here described thus provides for a certain overload protection which will be of the same effect no matter whether the arrangement serves for network regulation or for the connection of rectifiers or as a means to be used in connection with still other loading circuits. An additional advantage of the novel arrangement resides in a special dependency of the secondary voltage upon the primary voltage, namely, a dependency that consists in the fact that with decreasing or increasing network voltage the voltage effective in winding *s* is caused respectively to increase or decrease. This relation to the network voltage may be utilized for rendering the arrangement independent to a certain extent of the network voltage. This is of special importance in connection with the automatic battery charging in the case of dry rectifiers, the novel arrangement here having the following advantages:

(1) Compensation of the internal drop of potential of the dry rectifier device.
(2) Overload protection.
(3) Independency of variations of the network voltage.

Arrangements as provided by the invention thus combine all the properties desirable in connection with automatic battery charging and in addition present the advantage that no mechanical devices whatever are employed. Also, contrarily to the known arrangements operating with the aid of a premagnetization effected by unidirectional currents the advantage is attained that in consequence of a premagnetization winding missing an ohmic drop of potential which would be due to this winding, is avoided.

The arrangement if appropriately multiplied may be used also in three-phase or polyphase supply networks.

HELMUT BÖHM.

PUBLISHED
MAY 18, 1943.
BY A. P. C.

H. BÖHM

VOLTAGE-REGULATING TRANSFORMERS

Filed Dec. 17, 1938

Serial No.
246,302

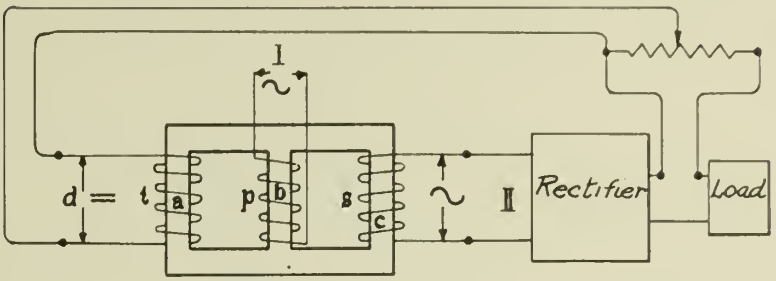


Fig.1

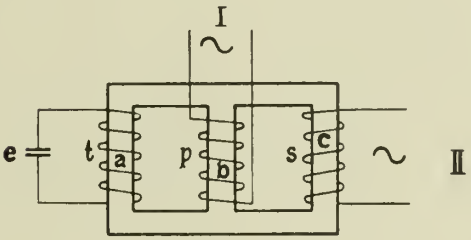


Fig.2

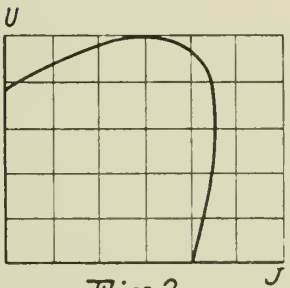


Fig.3

Inventor:
Helmut Böhm
by Edward Pinney
Att'y

Published May 18, 1943 Serial No. 246,483

# ALIEN PROPERTY CUSTODIAN

## PROCESS FOR DRESSING COALS OR SIMILAR SUBSTANCES

Hirosaburo Osawa, Kaji-mura, Iruma-gun, Saitama-ken, Japan; vested in the Alien Property Custodian

No Drawing. Application filed December 17, 1938

It is well known to experts that if in the coal dressing, namely, the classification and separation of coals, it is possible to employ as a medium a solution of low viscosity having a desired specific gravity, the dressing may be performed with the highest efficiency. However, the heavy solutions fit for the coal-dressing are all so expensive as to be unsuitable for practical purposes. Therefore, none of them is used widely yet.

Now, according to the present invention it has been found that a heavy suspension of low viscosity and almost stable density can be produced by the dispersion in water of clay and finely-ground powder of pyrite (or iron sulphide) cinder or brittle iron ore of small utility value. This invention based on such new insight has succeeded in dressing coals and similar substances very economically with high efficiency by putting the material to be dressed, namely, coals or similar substances into a medium consisting of the heavy suspension of low viscosity and almost stable density which is produced by dispersion in water of clay and fine powder of pyrite-cinder brittle iron ore and causing floating and sinking phenomena and thus effecting the classification and separation by the difference of the specific gravities. The object of the present invention is to carry out the dressing of coals or similar substances economically with high efficiency by employing an inexpensive heavy suspension of low viscosity and almost stable density instead of an expensive heavy solution.

The clay used in the present invention must essentially have the composition particles less 0.06 mm. in diameter (undersized through a 200 meshes screen), the coarser ones being undesirable. In this invention, the powder of pyrite cinder indicates the residual iron oxide to be easily powered which is produced after pyrite (or iron sulphide) ore is provided for the manufacture of sulphuric acid; and the iron ore, porous brittle cinder of siderite ore or brittle iron ore such as earthy or granular liminite. Although these substances possess the specific gravity of about 4, they are regarded as of little or no use for other purposes. The particles of these substances should be finer than 0.06 mm. in diameter and the coarser ones which remain after sizing and selecting are finely ground for use.

A suspension of mere clay and water is generally so highly viscous that it seems impossible to produce a suspension of the specific gravity of more than 1.35 and of the viscosity fit for dressing. But the suspension, in which clay and the above-mentioned powder of heavy substances are dispersed, has so low viscosity and almost stable density that it is possible to produce a heavy liquid having the specific gravity 1.35 to about 1.7 suitable for coal-dressing.

It is desirable that the viscosity of a suspension should be reduced with the diminishing of the size of the material to be dressed, although in handling of the material to be dressed which is more than 6 mm. in diameter the suspension may be prepared on the standard of the viscosity shown by calcium chloride solution of the specific gravity 1.4 at 20° C or the ordinary room temperature. When the materials to be dressed are finer than 6 mm. in diameter, a suspension of the lower viscosity is employed. Since a suspension showing a desired specific gravity and viscosity must have the proportion of the materials vary considerably according to their property, a suitable proportion must be selected economically after examining the property of the materials.

As an example, let me explain the case where there are used powder of pyrite-cinder of the specific gravity 4.7 and clay of the specific gravity 2.6, both undersized through a 200 meshes screen. In this case, the above-mentioned suspension of the standard viscosity has such proportion of the materials per litre that, when its specific gravity (density) is 1.4, water, clay and powder of pyrite-cinder are 806 c.c. 387 grms. and 207 grms. respectively, while when it is 1.5, they are 790 c.c., 344 grams and 366 grams respectively. Further, when it is 1.6, they may be 776 c.c., 288 grams and 538 grams. If such suspensions are kept still in a vessel, they will have a clear liquid at the upper portion in a short time which gradually increases its quantity, while they receive but very little change in the suspension part, so far as the density is concerned. That is to say, if the said suspensions are filled to the depth of 16 centimeters in a glass tube of 20 centimeters high and after they are kept still for two hours, some of them are taken out as samples at the parts near the upper and lower ends and when their difference in the specific gravity is measured, it is found that the one having the specific gravity 1.6 is $^{8}/_{1000}$, and the others also less than $^{10}/_{1000}$.

The liquid attached on the surface of the materials to be dressed are washed off with water or rinsing water after the dressing, and after it is reclaimed in a settling tank or thickener, its upper clear portion is removed so that it may have

its density raised to as high as the original one and be used repeatedly for coal-dressing.

Since the suspension employed in the present process is stable as stated above, it is possible to prevent the change of its density by throwing in the materials to be dressed, floating and sinking phenomena and the operation of eliminating floating substances and sinkling ones during the coal dressing. Moreover, a supply of liquid and reclaimed one are both poured from the tank into the suspension in a dressing tank through many holes at its side by a pump, thus not only uniforming the density of the liquid, but also making the classifying and separating action effective. The liquid in the dressing tank during the suspension of a dressing operation is, if necessary, circulated or stirred with the pump, lest it should change the desired density when the operation is restarted.

Comparing the suspension used in this invention with that employed in De Vooys's method which consists of baryte-powder and clay dispersed in water, the powder of pyrite-cinder and other heavy substances in the former are not only far less expensive than barytes, but also can be ground more easily. Although they have the same viscosity, the former is much stabler in density. The following is the result of the tests obtained by comparing their viscosities and stabilities:

In both of them which employ the materials all passed through a 200 meshes-screen, the suspensions are prepared from the same undersized clay, using the same quantity of water. Adding powder of pyrite-cinder (Sp. gr. 4.7) in the one and adding brytes (sp. gr. 5) in the other, the suspensions of the same sp. gr. 1.6 were produced. An examination showed that both had the standard viscosity, as described above, but as regards the change in the density after they were kept still for two hours, the one employing the powder of pyrite-cinder showed a difference in the density between the upper and lower portions as $^{3}/_{1000}$, while the one employing baryte powder showed the difference as high as $^{47}/_{1000}$.

By Lessing's method which uses a heavy solution of calcium chloride, it is not only very hard to get a solution of the specific gravity more than 1.43, but also a large quantity of expensive calcium chloride and a great cost for its recovery are necessary. With regard to Conklin's method which employs a suspension of water and ground magnetite which ore is hard and valuable to manufacture steel, it costs much and moreover the suspension used has the serious defect of having unstable density, whereas the suspension in the present process is more effective in many important respects than any other ones employed in the above known methods.

Thus, as in this invention it is possible to dress coals by employing the heavy suspension prepared from almost waste materials with the same highest efficiency as when an expensive heavy solution is used, it contributes both economically and technically to the dressing of coals or similar substances.

HIROSABURO OSAWA.

Published May 18, 1943 Serial No. 246,825

# ALIEN PROPERTY CUSTODIAN

## VOLTAGE CONTROL

Günter Wolf, Berlin, Germany; vested in the Alien Property Custodian

Application filed December 20, 1938

In transmitting tubes of large power tungsten cathodes or semi-indirectly heated tangalum or niobium cathodes are in use at the present time. The cathodes may be either of the filament type or indirectly heated. Since the resistance of these kinds of cathodes when cold is extremely low, it is unwise to directly connect the cathode to the full heating voltage, for in that case the initial rush of current would be unduly large with the likelihood of causing deformation or warping of the cathode. The resistance of the cathode, however, grows as the temperature rises so that, at normal heating potential, it has a resistance about 12 times what it is in cold state.

If, as in past practice, the cathodes of transmitter valves were to be heated up gradually and continuously it was imperative to use for the heating direct current generators the excitation of which was progressively raised. Where alternating current was used, step type or tapped transformers had to be employed, care having to be taken so that the first steps were of very low voltage. Where a steady and continuous voltage variation was desired with alternating current supply, this could be done only by the aid of series resistances. However, this method is economical only for very small heating powers inasmuch as such series resistances mean the dissipation of unnecessarily large amounts of energy. In large power tubes, a choke-coil may be connected in series with the transformer when the tube is switched into the circuit, the said coil, either after a predetermined length of time or after a certain voltage limit has been attained at the cathode of the tube being short-circuited. If dry rectifiers, such as oxide or copper type rectifiers are used for rectification on the secondary side of the heating transformer, then the methods for heating up are the same as for alternating current heating.

All of these methods, except in the case where direct current generators are employed, involve gradual raising of the heating potential in more or less large steps or intervals. Now, in what follows a method shall be disclosed which is designed to raise the heating potential of transmitter valves in a continuous way. This is made possible by the use of controlled rectifiers, that is, "Thyratrons", in the primary circuit of the heating transformer. Two basic circuit organizations shall be described by reference to the appended drawing, in Figures 1 and 2, while Figure 3 is a graph explanatory of the operation of the embodiment of the invention shown in Figure 2, while Figure 4 shows a modified form of the invention.

Referring to Figure 1, 1 denotes the transmitter valve, 2 the heating transformer, 3 the controlled "Thyratrons." The simplest procedure for heating up by the aid of the said grid-controlled rectifiers or "Thyratrons" is by shifting the ignition angle. The grid circuit comprises the grid resistance 4, the variable grid biasing voltage source of supply 5 and the control transformer 6. The latter is united at its primary end to the phase shifter 7 which may be of the rotary transformer type. When the tube is switched in, the grids of the "Thyratrons" are biased to a definite negative voltage value, and a very low alternating potential is applied to the primary of the heating transformer. The heating up process now proceeds as follows: By adjustment of the phase shifter 7, a gradual increase in the amplitude of the primary potential takes place. What thus results are sections of the corresponding sinuous alternations in positive and in negative direction of the current since the "Thyratron" tubes are connected in opposition, and since a grid control device is provided for each "Thyratron" tube. These voltage impulses are stepped down and they gradually heat up the cathode of the transmitter valve. The rate at which such initial heating takes place is a function of the speed with which the phase shifter 7 is turned. Now, the rotation of the phase regulator may be controlled by prescribing the time in which rotation of the rotor takes place. In this case the heating up curve is a function of the speed of rotation that has been adjusted. If the said method is to be made automatic, then the voltage, for instance, may be taken off at the cathode of the transmitter tube and be fed through convenient intermediate means to a pawl or notch switch or to a motor, the action of which is to cause automatic gradual continuation of the rotation of the phase shifter with rising potential at the transmitter tube. Where such a method is used, it is necessary when switching in that a low potential should prevail at the transmitter tube.

What is inconvenient in the said method is the mechanically operated rotary regulator. By the use of suitable bridge arrangements, however, it is possible to effect regulation of the drive also by purely electrical means, without the intermediary of mechanical auxiliaries. However, still simpler is a regulation of the drive by variation of the grid potential. This method is fully automatic. The alternating potential which is applied to the filaments of the transmitter tube is

rectified either directly or with the interposition of a transformer by a rectifier 8, and then impressed by way of a choke-coil 9 and a condenser 10 upon a load resistance 11. The purpose of the latter is to prevent the condenser 10 from becoming charged up to the rectified peak or crest potential. The rectified alternating potential hereinafter to be called the control potential is fed to the pre-existing grid biasing voltage at the "Thyratrons" with opposite polarity.

The operation of the regulator or control device is as follows: When switching in, the control (alternating) voltage causes but a very limited drive of the plate alternating potential. These minute voltage impulses result in corresponding small current impulses in the heating circuit of the transmitter tube. These voltage impulses are rectified in 8 and returned to the grid. The ensuing control potential results in a reduction of the predetermined grid biasing voltage and this is attended with a shift in the times of the ignition or striking. This in turn is associated with an increase in the drive range and thus a further growth of the regulator voltage which again occasions an increase in the drive.

The rate of speed at which such automatic regulations occurs is governed by two quantities, to wit: by the steepness or slope of the control alternating potential and, further, by the thermal inertia of the cathode. There are various circuit organizations which make it practicable to influence the shape of the control alternating voltage curve. For instance, the negative branch may be flattened by the use of a rectifier 12 paralleled to the control transformer and a corresponding resistance 13. Broadly speaking, it is imperative for the functioning of this semi-automatic method that the control alternating potential should present a steady rise inside the range of 180 electrical degrees, with the bend thereof being always greater than that of the grid striking or ignition potential corresponding to the plate alternating potential that is used. The production of such control alternating potentials, for instance, is possible by means of exponential type tubes.

The most important factor or quantity in connection with the regulation of the rate at which this automatic regulation takes place is the thermal inertia of the cathode. As a result each tube becomes heated up at its own inherent rate. This is ascribable to the fact that when switching in the device at a very low alternating potential the temperature of the cathode is very low so that the heating current referred to the heating voltage assumes a fairly large value. With slow heating up of the cathode, however, the current decreases and the voltage rises gradually. This rise of the potential then results in a further increase in the heating potential in a way as hereinbefore described.

If the controlled rectifiers or "Thyratrons" are driven the full range, they may either be left permanently in operation so that the primary current of the heating circuit will flow therethrough all the time, or else they are short-circuited by the agency of a switch 14 (Figure 1). This relieves the "Thyratron" and thus assures long life for the same. There is this further advantage that the losses in the "Thyratrons" which are caused by the slow potential are avoided.

In the described exemplified embodiment Figure 1 there are used for the controlled "Thyratrons" three hot-cathode rectifiers with a mercury vapor filling. However, it is also possible to employ discharge tubes with liquid cathode and auxiliary arc. This auxiliary arc is necessary in order that in single-anode devices ignition in each positive alternation may be possible. However, for the auxiliary circuit at least two anodes are necessary, though any desired greater number may be used. The auxiliary circuit may at the same time be used for the production of auxiliary potentials which are required in the grid circuits of the "Thyratrons".

Rectifiers of the "Thyratron" type comprising liquid cathodes offer the essential advantage that they have unlimited emissivity contradistinct from what is true of rectifiers furnished with oxide cathodes in which peak current overloads cause spatter of the oxide filament which is liable to put the tube out of commission.

In an exemplified embodiment which is illustrated in Figure 2 "Ignitrons" are employed for the controlled rectifiers, in fact, this type is particularly suited for the present purpose. The "Ignitron" is predicated for its operation upon the fact that in each positive alternation of the voltage wave when passage of current is desired ignition by the igniter rod made of semi-conducting material must take place lest the tube stays blocked or cut off. To this end it is necessary that a positive voltage impulse be applied between the igniter rod and the cathode. This voltage impulse occasions a spark at the boundary layer between the semi-conductor material and the mercury which initiates the main discharge. By the provision of accessory control grids it is possible to make the precision of the ignition time still greater whereby the dependability of the operation of the tube is assured.

For the creation of the controlling impulses by the igniter rod a grid-controlled auxiliary tube 16 is employed. The latter may either be a hot-cathode mercury-vapor rectifier or a control tube with a liquid mercury, as shown in the drawing. The excitation in this latter case must be effected by the aid of auxiliary anodes 17 which are fed from the transformer 18 and which will permit the auxiliary direct current to flow through the choke-coil 19 and the resistance 20. The control tube 16 discharges the condenser 21 at the rhythm of the impressed grid alternating voltage, the said condenser being charged through the choke-coil 22 from the auxiliary rectifier 23 from the transformer 24. The grid control and regulator device is essentially the same as in Figure 1. Its distinguishing feature resides in the addition of a relaxation-wave generator which superimposes upon the control alternating potential, an alternating potential being several times higher than 50 cycles per second. The relaxation generator comprises the charge resistance 25, the charge condenser 26, the discharge resistance 27, the ratchet tube 28 and the transformer 29. In the control circuit of the relaxation wave generator 28 is included the grid resistance 30, the grid biasing voltage 31 and the control transformer 32. The latter is connected with a three-phase supply line and it furnishes a synchronizing frequency of 150 cycles per second. It is possible to obtain with the generator any sawtooth frequencies which is a multiple of 150 cycles per second.

As pointed out at the outset it is possible to make the ignition point more precise by adding a control grid in the "Ignitrons." This additional grid control circuit, however, in addition may be

used for the purpose of equalizing fluctuations in the supply-line potential of the primary line and to make conditions so that the heating potential will be perfectly stable and constant. To this end, it is necessary that the "Thyratron" should operate permanently and that the short-circuiting switch is not closed for bridging the tubes. This added regulator device is schematically indicated at **33**. However, it is possible also to get along without an additional grid and to bring the regulator device **33** to act upon the grid of the control tube **16** in order to secure the identical effect.

The operation of the assembly is represented in Figure 3. As can be seen therefrom the 50 cycles per second control alternating potential $U_{st1}$ presents a phase shift in reference to the plate alternating potential $U_a$ at the "Thyratrons," which stays constant. Superposed upon the control alternating voltage is the relaxation potential $U_{st2}$ of higher frequency. By a reduction of the grid biasing voltage $U_g$ the overall control potential is raised, and the peaks of the control alternating potential of high frequency cut the curve of the grid ignition potential $U_{gz}$. The result is that the extent to which the plate alternating potential is swung or driven is altered by steps and the final effect is an abrupt change of the heating potential. This method allows a water-cooled tube to be gradually heated in a great number of small steps of potential. By a change of the phase shift of the plate alternating voltage and the grid control voltage or by variation of the steepness of the slope of the control alternating voltage of higher frequency, there exist a great number of chances for variation in order that the special conditions of any practical case may be satisfied.

So far as the operation of this scheme is concerned, it is absolutely necessary that all auxiliary alternating potentials be taken from the same supply line as the main alternating potential in order that the control circuits may stay in synchronism with the main circuit.

By including a heating-up arrangement with controlled "Thyratrons" an essential saving in the operation of power transmitters is feasible. Figure 4 schematically shows an exemplified case how groups of transmitter tubes may be heated up. In the scheme here shown the tubes are divided into groups I and II. Of course, each group may comprise a more or less great number of tubes than here shown. To these two groups of transmitter valves pertain the two "Thyratron" groups A and B. Now, under routine operating conditions it is possible to heat up the tube group I by means of the "Thyratron" assembly A simultaneously with that of the tube group II by means of "Thyratron" assembly B. But if by chance one of these "Thyratron" assemblies should break down due to a failure in operation, the operation of the transmitter will not be affected for it is then feasible first to heat up tube group I by the aid of the "Thyratron" assembly A, to then close the short-circuiting switch **4**, to thereupon connect the "Thyratron" assembly A to the transmitter tube group II and to finally heat up the latter. After completion of the process the short-circuiting switch **5** is closed. The "Thyratron" group may then be connected to other transmitter tube assemblies or else it stays inoperative until required for other heating-up services.

It will be noticed that if the principle of a standby equipment is given up, a large-power transmitter, no matter how many groups or tubes it may contain, may be heated up in stages from a single "Thyratron" group. Compared with present-day equipment this offers a chance of making a saving in so far as all of the choke-coils which nowadays are as a rule included in the primary circuits of the heating transformers may be dispensed with. In the customary large-power tubes, each tube has its own heating transformers with a corresponding choke-coil in the primary circuit.

The invention is not confined to the exemplified embodiments here illustrated. For instance, the controlled "Thyratrons" could be included also in the secondary circuit of another transformer connected in series with transformer **2**. Where three-phase current is used instead of single-phase current, the number of the "Thyratron" banks, of course, must be raised correspondingly. The "Thyratrons" could also be included in the secondary circuit rather than in the primary circuit of the heating transformer, while in the primary circuit controlled and in the secondary non-controlled "Thyratrons" or plain rectifiers could be employed if direct current heating of the transmitter valves is desired. The invention, moreover, is not restricted to being used with transmitter valves, on the contrary, it may be employed wherever resistances have to be heated up whose resistance, in cold state, is unduly low to take the entire operating potential.

GÜNTER WOLF.

PUBLISHED
MAY 18, 1943.
BY A. P. C.

G. WOLF
VOLTAGE CONTROL
Filed Dec. 20, 1938

Serial No.
246,825
2 Sheets-Sheet 1

Fig. 1

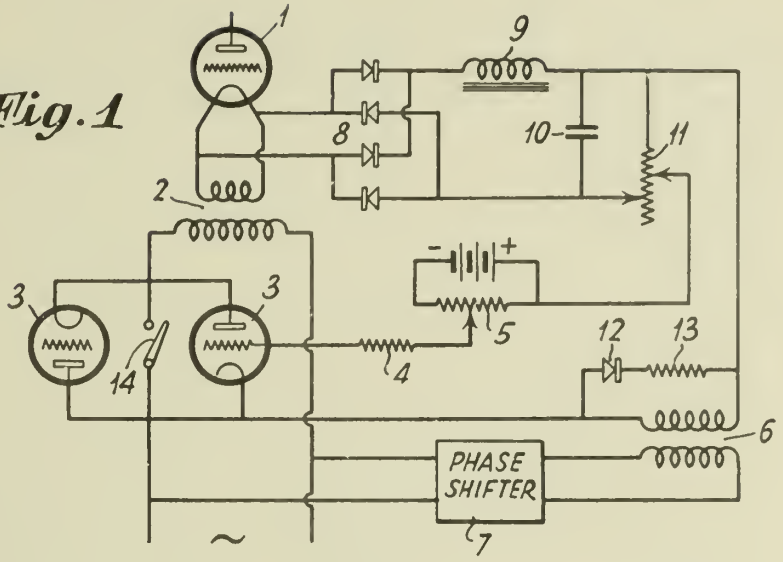


Fig. 4

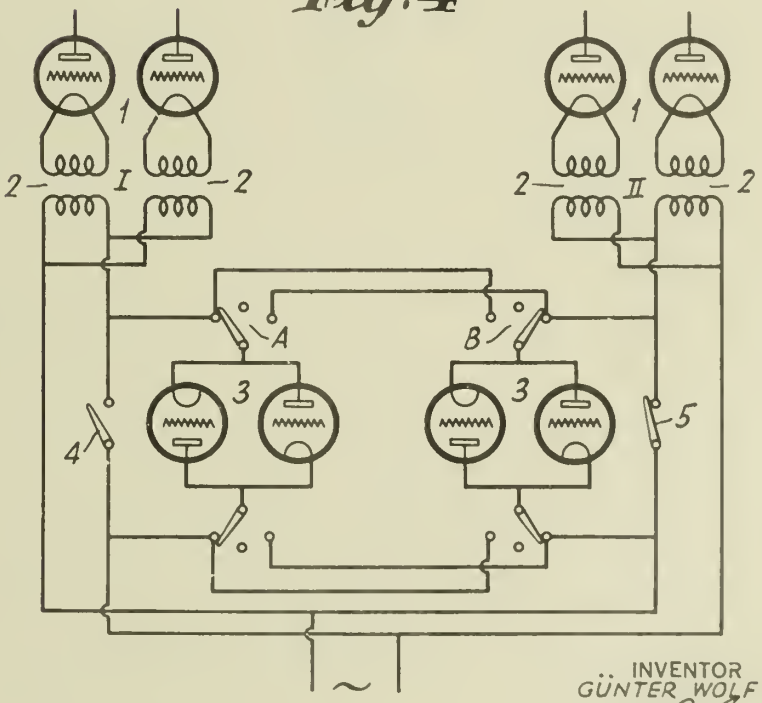


INVENTOR
GÜNTER WOLF
BY H. S. Grover
ATTORNEY

PUBLISHED
MAY 18, 1943.
BY A. P. C.

G. WOLF

VOLTAGE CONTROL

Filed Dec. 20, 1938

Serial No.
246,825

2 Sheets-Sheet 2

Fig. 2

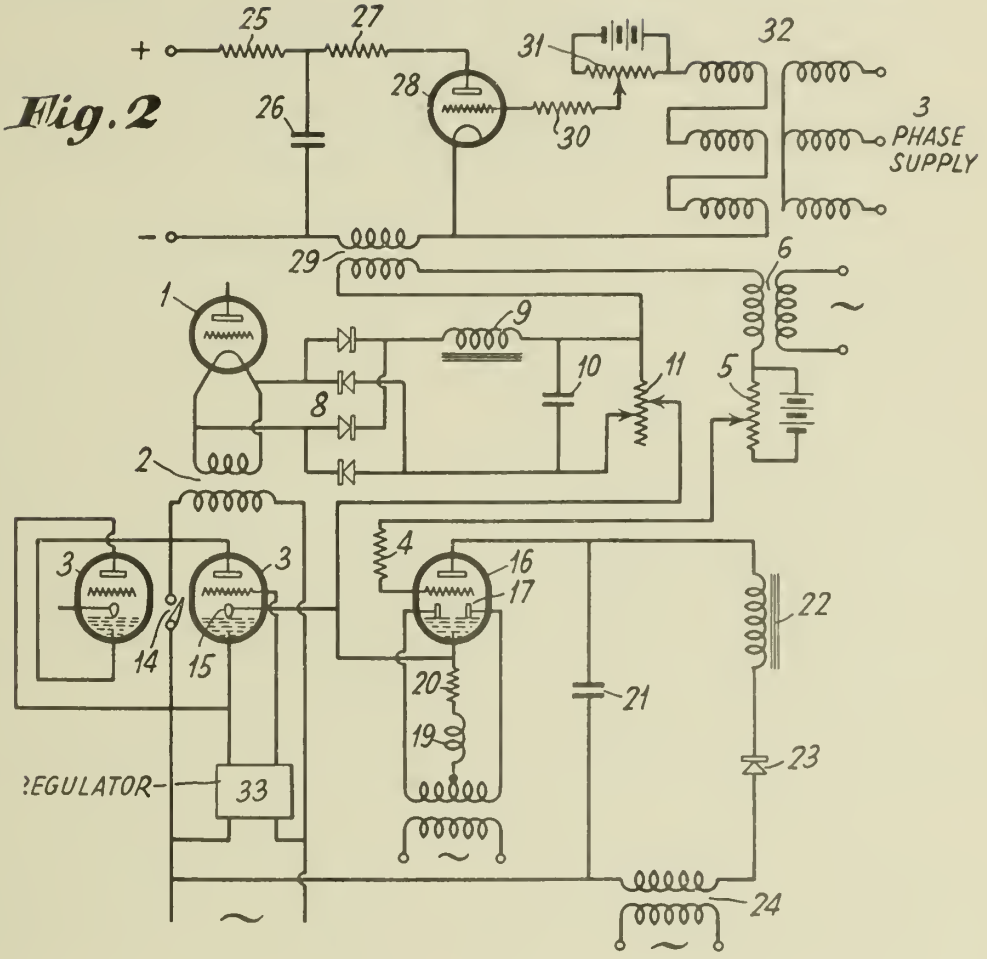


Fig. 3

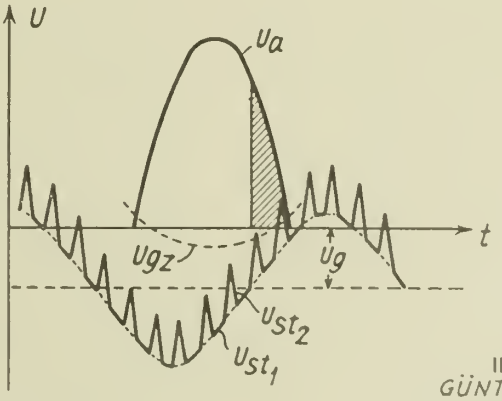


INVENTOR
GÜNTER WOLF
BY H. S. Grover
ATTORNEY

Published May 18, 1943 Serial No. 253,939

# ALIEN PROPERTY CUSTODIAN

## APPARATUS FOR OBTAINING PERSALTS, E. G. PERSULPHATES, BY ELECTROLYSIS

Werner Trinius, Bruhl, near Cologne, Germany; vested in the Alien Property Custodian

Application filed January 31, 1939

This invention relates to an apparatus for obtaining persalts, e. g. persulphates, in electrolytic cells of the known structural kind in which the cathode and the anode are arranged within one another and the cell wall is formed of the anode or of the cathode, the electrolyte being in the compartment between the anode and the cathode which is traversed by the current.

In such cells operations are carried out either with a diaphragm or the cathode surface is kept particularly small with respect to the anode surface. In the apparatus with a diaphragm the compartment between the anode and the cathode is divided into two spaces. The distance between the electrodes must here be substantially greater than when a diaphragm is absent since for reasons of strength this must have a fairly great wall thickness. Because of the diaphragm and the thicker liquid layer the electric resistance is considerably greater and as a result the consumption of electric energy is higher than when the diaphragm is absent. If in the latter case the cathodic decomposition is prevented by diminution of the cathode surface, whereby parts of the cathode surface may be covered in known manner by a non-conductor, then the polarisation and decomposition of the persalts can be prevented only by high current strengths and a greater distance between the anode and the cathode.

It is already known in the case of electrolytic cells of other structural kind, that is to say with cathode and anode not arranged within one another, that by wrapping porous filaments of non-conducting and chemically unattackable fibre round the cathode to sufficient winding thickness the decomposition at the cathode can be prevented even in strongly acid solution. Heretofore for preparing ammonium persulphate weakly acid solutions have been used (solutions of ammonium bisulphate in water) and the cathode consisting of a carbon rod of about 20 mm. diameter tightly wound with an asbestos cord 3 mm. in diameter. In order to make ammonium persulphates in strongly acid solution, for example one from which hydrogen peroxide can be obtained by distillation without addition, such an apparatus has not heretofore been used since the opinion was held that the protective layer around the cathode would then have to be substantially thickened and consequently an uneconomically high voltage would be required.

It has now been found that operations may be carried out with satisfactory yields with a substantially thinner winding for the cathode even in the case of a strongly acid solution (e. g. of 300 g. of ammonium bisulphate in one litre of sulphuric acid of specific gravity 1.2) if according to the invention a current concentration is employed exceeding 1000 amps per litre of electrolyte.

Further according to the invention in order to prevent decomposition at the cathode of the persalt formed at the anode filaments or threads are employed for wrapping round the cathode consisting of non-conducting fibres, for example slag wool or glass wool, which are not attacked by the constituents of the electrolyte, lie in one direction and do not felt together. In this respect such threads or filaments differ advantageously from those heretofore used, more particularly from asbestos filaments. Further they have the advantage that they do not swell in aqueous solution and also retain their rigidity in the wet state. More particularly the fibres of glass wool filaments are not felted together, they lie in one direction and permit the hydrogen forming at the cathode to pass through everywhere. The electrical resistance of the cells in the case of asbestos windings, especially in weakly acid solutions, becomes greater after a time since the pores between the close windings become choked with deposit. This drawback does not occur in the case of glass wool filaments or threads in strongly acid solution.

Finally according to the invention the distance between the anode and cathode amounts to only a few millimetres, e. g. 2.5 mm., but at most 5 mm. Of this distance the protective layer around the cathode takes up about 1.5 mm. and the rest is occupied by the fluid compartment between protective layer and anode. The hydrogen bubbles appearing between the glass wool threads or fibres reduce the space for the electrolyte because of their volume, e. g. to one third. The hydrogen bubbles effect an extremely vigorous mixing of the electrolyte; as a result they prevent parts of the electrolyte remaining for a fairly long time at one place in the cell and decomposition of the persalts formed at the anode due to superheating. In this apparatus the decomposition and superheating is further prevented by the fact that the electrolyte continuously flows through the cell. Owing to the fact that the space for the electrolyte is chosen extremely small and the hydrogen bubbles reduce it further, a current concentration exceeding one thousand amps per litre is maintained.

In the present apparatus hollow metal electrodes are used which can be cooled in known manner. The cathodes are so arranged in the cell that the distance between anode and cathode is everywhere equally large

The employment of the invention is not limited to only strongly acid solutions; on the contrary it may be employed just as well in the case of weakly acid and neutral solutions.

WERNER TRINIUS.

PUBLISHED
MAY 18, 1943.
BY A. P. C.

W. TRINIUS
APPARATUS FOR OBTAINING PERSALTS, E. G. PERSULPHATES, BY ELECTROLYSIS
Filed Jan. 31, 1939

Serial No.
253,939

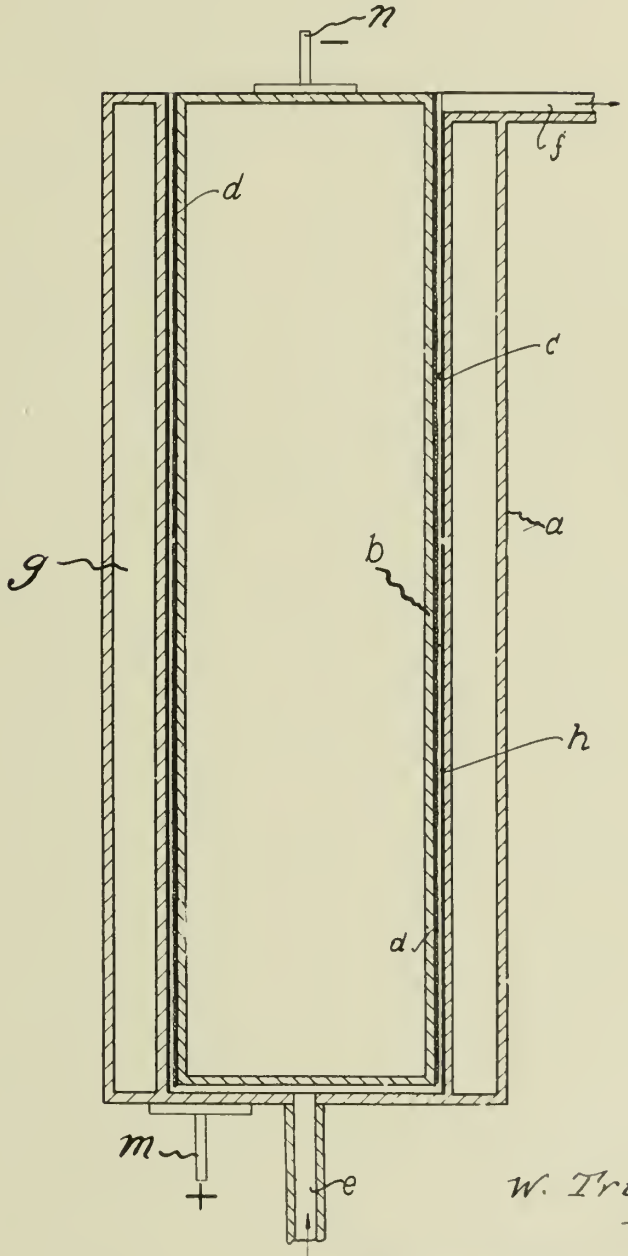


W. Trinius
Inventor

By: Glascock Downing & Seabold
Attys

Published May 18, 1943 Serial No. 254,505

# ALIEN PROPERTY CUSTODIAN

## RAFFINATION OF MINERAL OILS AND TARS

Friedrich Schick, Berlin-Schoeneberg, Germany;
vested in the Alien Property Custodian

No Drawing. Application filed February 3, 1939

The present invention relates to the raffination of mineral oils and tars with selective solvents and has for its object to provide improved methods for this purpose.

It is known that the term selective solvents designates such solvents as more readily dissolve the less saturated components of the oils including the O and S compounds resin and asphaltic substances and the like than the more saturated components. A great variety of solvents of inorganic and organic nature have been found to be suitable, and the phenols, and in particular the lower homologues such as phenol, cresols, and mixtures thereof and also technical mixtures such as crude phenol, crude cresol and creosotes have obtained particular importance as selective solvents.

It is known to extract mineral oils and tars by selective dissolving agents free from water, for instance by phenols free from water, and it is also known to effect the decomposition of mineral oils by phenols to which 5–15% of water or alcohol has been added. Finally it has already been proposed to decompose mineral oils in a first step with phenol to which little water, e. g. 5% has been mixed, into a raffinate and an extract, and to dilute the extract in a second step with water whereby a portion of the extract is precipitated as insoluble. This method has been evolved after it had been found that in the usual treatment with selective solvents a certain amount of valuable components of the oil passes into the extract, and it has been endeavoured by the proposed way to recover the same from the extract. However, this endeavour is not successful or anyhow leads to an incomplete success only, because, when water is added to the extract layer, the paraffinic components which are still present in small quantities, and which are less readily soluble, are not separated in a pure condition, but at the same time unsaturated hydrocarbons and impurities are separated so that in the best case a raffinate of the same condition as the initial oil is obtained, which must be treated again.

According to the invention, the treatment of the mineral oils and tars by selective solvents is carried out in the first step with the addition of an agent which counteracts the dissolving action of the solvent. This method has been found to give better results than the inverse way of first dissolving the main quantity of the oil with the exception of a relatively unimportant residue of highly saturated oil by means of concentrated solvent and subsequently endeavouring gradually to separate by the addition of water the oils which have passed into the solution. In a preferred form of the present invention the additional agent is a diluting substance for the respective selective solvent. In a modification of the invention, an antisolvent which is more readily soluble in the oil or the tar, respectively, than in the respective selective solvent and which therefore reduces the solubility of the substances under treatment by the selective solvent, is used as the additional agent.

According to the invention, the mineral oils or tars are thus first treated with a selective solvent, while the solubility of the selective solvent is decreased in this step by the addition of an agent performing this effect. The preliminary raffinate is then separated and is subsequently treated in one or more further steps until the desired qualities are obtained. In these further steps the treatment is effected by a selective solvent as in the first step, using, however, less of the additional agent or none at all.

In carrying out the invention according to the first-mentioned of the two main forms, i. e. with the addition of an agent acting as a diluting means for the selective solvent, a diluting agent is employed which is readily soluble in the selective solvent, and less readily soluble or not at all soluble in the oils and tars to be treated. Water, mono- and polybasic alcohols, acetic acid, or the like, may, for instance, be used as diluting agents.

When carrying out the invention in the second modified form, use is made in the first step, in addition to the selective solvent, of an agent which is more readily soluble in the substance under treatment than in the respective selective solvent. In the second step, the treatment with the selective solvent is then carried out without addition, or with an addition of a substantially lower amount only, of an additional agent. The treatment in the first step may, for instance, be effected by a rather concentrated phenol with an addition of gasoline. The treatment in the second step may then be carried out with phenol of the same degree of concentration as in the first step, however without addition of gasoline. Other substances may be used instead of gasoline, provided that the respective substance fulfills the condition of being more readily soluble in the oil under treatment than in the selective solvent. In the first instance, paraffinic hydro-carbons have proved to be suitable for this purpose.

In some cases it is recommendable to employ the selective solvent and the additional agent in the same proportion for a number of successive

treatments, i. e. to repeat the treatment in one step before continuing the process with a reduced amount of the additional agent. Oftentimes, better results are obtained by this method than by at once subjecting the substance under treatment in the respective step to the action of the total amount of selective solvent plus additional agent.

The raffination may be carried out at constant temperature although it is generally of advantage to maintain different temperatures in the individual steps in order to obtain the optimum separation effect. Preferably temperatures increasing from step to step are employed; however, with oils and tars having a high solidifying point one may also in a first step extract the material at a relatively high temperature and afterwards treat the raffinate obtained, in a given case after deparaffination, at a lower temperature, which may if desired subsequently be increased.

It is possible to operate in one or all steps according to the counter-stream system; it is also possible to use in one or all steps only a single treatment in mixers or mixing pumps and subsequent separation of layers in settling tanks or centrifuges.

Naphtenic solvents, such as $SO_2$, furfurol, pyridine, anilinc, nitrobenzenc, oxybenzaldehyde and phenols may, for instance, be used as selective solvents.

In the individual steps of the process either the same or different kinds of phenol may be used as desired, e. g. diluted phenol $C_6H_5OH$ may be used in the first step and crude cresol or the like in the second; however it will generally be advisable to maintain the same solvent in view of the greater simplicity.

The process according to the present invention leads relative to the treatment with phenol free from water, or with aqueous phenol of an unchanged degree of concentration, to an increase in output and/or an improvement of the qualities (height of pole, density), in particular with asphaltic oils. In certain cascs a successful raffination with phenol has for the first time been made possible by the method proposed, as for example, the treatment of oils obtained from oil chalk.

It is of course necessary that the temperature, the quantity of solvent applied, and the number of the steps or stages should be adapted to the initial material used in each particular case. When the conditions are suitably adjusted, it is possible to keep the percentage of solvent in the raffinate so low that it is not necessary to effect blowing-off between the individual steps.

*Example I*

50 parts of the residue of a naphthenic crude are treated with a mixture of 40 parts of phenol and 10 parts of glycol. The layers formed by this treatment are then separated, the upper raffinate layer is then freed from the solvent by distillation.

100 parts of this raffinate are then treated with 80 parts of phenol free from water, whereby again layers are formed. The upper layer after separation and evaporation of the solvent gives a good lubricating oil. The temperature in the first step may be 50° C, and in the second step 70° C.

*Example II*

100 parts of a lubricating oil fraction from Heider oil chalk are in the first step treated first with a mixture of 45 parts of phenol and 5 parts of water. The upper layer formed is then separated and once more subjected to the same treatment.

Then the newly formed raffinate layer is separated, and 100 parts of this layer are in the second step treated with 80 parts of concentrated phenol. Of the two layers formed by this treatment the upper raffinate layer is separated, freed from the solvent by distillation, and is then subjected to an after-treatment with 3% of bleaching earth.

The whole process may be carried out at a temperature of 40° C. The following table shows the qualities of the starting material as compared with those of the raffinate produced.

| | Starting material | Raffinate |
|---|---|---|
| Density | 0,970 | 0,925 |
| Viscosity (degrees Engler at 50° C) | 18,3 | 11,3 |
| Viscosity-index | −18 | +50 |
| Conradson | 2,35 | 0,7 |

*Example III*

100 parts of a lubricating oil distillate derived from a German asphaltic basic crude oil from the district of Nienhagen (15° Engler at 50° C) are diluted with 50 parts of gasoline, and the oil-gasoline mixture is then treated with 100 parts of pure cresol at 20° C. The layers are separated, and the raffinate layer is freed from the added gasoline by fractional distillation and is then subjected to an extraction with pure cresol (100% concentrated) at 30° C. The resultant raffinate is freed from the solvent by distillation.

By the process a lubricating oil for engines of good ageing stability has been produced, the viscosity of which is 11° Engler at 50° C.

It is to be understood that the invention is not limited to the working conditions stated in the above examples.

FRIEDRICH SCHICK.

Published May 18, 1943 Serial No. 254,376

# ALIEN PROPERTY CUSTODIAN

## PROCESS FOR THE ELECTROLYTIC PRODUCTION OF NEUTRAL HYPOCHLORINATED SOLUTIONS, MEANS AND APPARATUS USED AND NEW PRODUCTS OBTAINED

Pierre Max Raoul Salles, Cauderan, France; vested in the Alien Property Custodian

Application filed February 3, 1939

The present invention relates to various improvements in processes for the production of hypochlorinated physiological liquors and in particular:

A process for the electrolytic production of hypochlorinated solutions rigorously exempt from free alkali,

Means and apparatus for carrying out this process,

New products obtained.

During the normal electrolysis of a solution of an alkali chloride, such for instance as sodium chloride, the alkali metal released on the cathode reacts on the water and forms soda, which immediately dissolves, and hydrogen which evolves.

$$Na+H_2O=NaOH+H$$

The chlorine evolves on the anode; its low solubility does not allow it to dissolve instantaneously and a portion is lost in the atmosphere, whereas the other portion combines with the soda and forms sodium hypochlorite.

$$NaOH+Cl=NaOCl+H$$

It results therefrom that in proportion as the electrolysis takes place the liquor becomes rich in free soda corresponding to the chlorine lost in the atmosphere.

When the free soda content is sufficient for all the chlorine to be combined as it passes, the operation continues without loss of halogen and without increase of alkalinity.

This explains why, at the beginning of the electrolysis, the characteristic smell of chlorine is perfectly perceptible in the gases which evolve and this smell disappears at the end of a certain time.

Finally, the hypochlorinated solution always contains free alkali and this constitutes a serious inconvenience for certain uses, such as the treatment of wounds, antisepsis of mucous membranes, etc., as said alkali is caustic and destroys the cells.

Attempts have been made to remedy this inconvenience by adding to the electrolysis, various salts such as magnesium chloride, sodium diborate, etc., the function of which is to react on the free soda to form, the first magnesia and the second, neutral borate; but, as during the electrolysis, ozone and a small quantity of peroxide of hydrogen are always formed, the magnesia is produced in the form of a soluble and very alkaline hydrate which modifies the pH of the liquor. The same is true with the borate which necessitates a rigorous dosing and conditions of electrolysis which are always constant and impossible to obtain when starting from an essentially variable electric current.

Known hypochlorinated solutions are not rigorously neutral, they contain soda or potash and, moreover, alkali carbonates or calcium salts.

*Process.*—The process forming the subject-matter of the present invention, consists in effecting the electrolysis of the sodium chloride in a fluid-tight enclosure resisting to pressure.

During the electrolysis, the temperature of the liquid rises, all the gases are retained and chlorine evolves. Chlorine is only slightly soluble in water; if the specific intensity of the current is not low, the chlorine released has not time to dissolve and a part of it is evolved with the electrolytic gases and would be lost if the apparatus was not fluid-tight; the other part of the chlorine combines with the basis to form the hypochlorite. To the chlorine lost would correspond a definite quantity of free alkali which would render the liquor caustic and consequently unsuitable for many uses.

When the current ceases to pass the operation is terminated; a short stirring operation is effected for stirring the liquid with the electrolytic gases contained in the fluid-tight enclosure.

The chlorine produced, trapped in the fluid-tight enclosure, has all the time necessary to dissolve and to exactly saturate the free alkali.

It is obvious that, in proportion as the operation proceeds, the gases which evolve accumulate in the apparatus and create in the latter a progressively increasing pressure; it is therefore necessary to provide above the liquid, a sufficient space in order that the increase of pressure should not be dangerous.

The operation can be controlled either by the pressure, or more simply, by the rise of temperature, which are functions of the quantity of electricity passing through the apparatus.

The advantages of this process reside in the fact that it automatically allows of obtaining hypochlorinated solutions rigorously exempt from free alkali by starting from liquids which are strictly physiological, these solutions can be, according to their concentration, isotonic, hyper or hypotonic to blood serum and the chlorometric degree of which is rigorously determined by the duration of the electrolysis, therefore by the rise in temperature or the increase of pressure.

Another cause of alkalinity, but which is not caustic, arises from a secondary reaction due to the action of the carbonic gas or a bicarbonate contained in the water on the hypochlorite already produced; hypochlorous acid and an alkali carbonate are formed.

For obtaining a rigorously neutral liquor it is therefore necessary to operate under shelter of air and with pure water which does not contain, as all drinking waters, bicarbonate of calcium. These conditions are satisfied by employing freshly distilled water or which has recently been boiled.

The physiological serum can be a simple solution of sodium chloride isotonic to blood serum;

however for operating in the best conditions, it is preferable to prepare said solution in the same way as blood serum, that is to say with a mixture of sodium chloride and potassium chloride in their natural ratio.

In 65.172 grams of chlorides contained in the blood are to be found:

| | |
|---|---|
| Sodium chloride | 61.087 |
| Potassium chloride | 4.085 |

One litre of isotonic serum will therefore contain:

| | |
|---|---|
| Sodium chloride | 7.03 |
| Potassium chloride | 0.47 |

For convenience in use, a concentrated solution can be prepared containing:

| | |
|---|---|
| Sodium chloride | 140.6 |
| Potassium chloride | 9.4 |
| Water quantity sufficient for one litre | |

50 cubic centimeters of this solution correspond to one litre of serum.

The efficiency of the process is proved by comparing the hypochlorinated physiological liquors produced, all things being moreover equal, in an open enclosure and in a fluid-tight enclosure.

*Product.*—The electroserum thus obtained in a fluid-tight enclosure constitutes a new industrial product which differentiates from the known hypochlorinated solutions by definite features. The antiseptics known and used are all more or less alkaline, necrosis forming, corrosive or coagulating. Their long use has caused, in certain cases, serious damages.

Salles' electroserum is hypochlorite of sodium rigorously exempt from free alkali, it contains a small quantity of ozone. It constitutes the non coagulating, non necrosis forming, non corrosive and formally neutral antiseptic which has been so long sought for and never found up to this day.

Salles' electroserum exempt from free alkali, has a similar composition to blood serum. Its automatic electrolytic preparation can be immediately effected and ensures the always constant composition of the same. It is prepared at the moment of use, in a few minutes at the temperature of the human body 37° C.; its extemporaneous use allows of administering the same when it issues from the production apparatus at the optimum temperature of 37° C.

Its tonicity, variable at will, depends on its use, it can be isotonic to blood serum for the treatment of wounds, to tears for the eyes, to urine for the bladder. Consequently, the hypochlorinated hyp iso or hypertonic liquor is rapidly available, luke-warm and ready to be used in the best physiological conditions.

Its physiological action ensures a rapid recovery. It is satisfactory for the treatment of external or internal mucous membranes.

Salles' neutral electroserum, owing to its easy manufacture, its convenient use, its efficient microbicidal and healing value, is a valuable antiseptic. Independently of its antiseptic properties, Salles' electroserum has moreover a sedative effect, it is agreeable to invalids and relieves pain.

Its cost price is very low.

*Apparatus.*—Salles' neutral electroserum can be obtained by means of any apparatus allowing to effect the electrolysis of sodium chloride in a closed vessel under pressure.

By way of indication and not in a limiting sense, two apparatus for producing Salles' electroserum are illustrated hereinafter:

Figs. 1, 2, 3, 4, 5, 6 and 7 relate to an individual portable apparatus.

Figs. 8, 9, 10, 11 and 12 relate to a clinical apparatus which is fixed or mounted on a carriage.

Fig. 1 is an elevation of the box allowing the apparatus to be transported. The box comprises a body 1 and a cover or lid 2 which opens by means of hinges 3 and is maintained closed by a closing device 4. The body 1 is divided by a partition 5 into two compartments 6 and 7 respectively receiving the device 8 for rectifying alternating current into direct current and the electroserum producer 9 illustrated in Fig. 3.

Fig. 2 is a side view of the box showing two current-intakes 10 and 10' allowing to connect the rectifier to the direct or alternating current mains and the two current intakes 11 and 11' allowing to connect the rectifier to the producer.

Fig. 3 is an elevation of the electroserum producing apparatus 9. This apparatus comprises a glass vessel 12 axially receiving a member 13 made of ebonite or other suitable material comprising at its upper part a screw threaded head 14 forming a stopper screwing on the screw threaded neck of the vessel.

Fig. 4 is a detailed section of the electrodes.

Fig. 5 is a detailed plan view of the stopper 14.

Fig. 6 is a section made according to line VI—VI of Fig. 3.

Fig. 7 is a detailed view of the clip for the rubber tube.

The member 13 comprises: the conduit 15 for the distribution of compressed air sent by the bulb 16 provided with a control chamber 17 and through the tube 18; two positive and negative electrodes 19 and 19' which allow the passage of current in the electrolyte with their outer current intakes 20 and 20'; the conduit 21 which allows the electroserum to be projected on the wounds through the tube 22 and the distributor 23; the thermometer 24 gives the temperature of the electrolyte.

The clip 25 constituted by a folded steel wire the ends of which are welded to discs receiving the thrust of the fingers, allows of interrupting all communication between the enclosure containing the electrolyte and the atmosphere.

The preparation of the physiological serum consists in dissolving in water, sodium chloride and potassium chloride in the proportions in which they are to be found in blood serum, that is to say, about 7.03 grams of sodium chloride and 0.47 grams of potassium chloride per litre. These salts can be found on the market in the pure state.

In practice, for the sake of convenience, a concentrated solution can be prepared beforehand, containing:

| | Grams |
|---|---|
| Sodium chloride | 140.6 |
| Potassium chloride | 9.4 |
| Water, quantity sufficient for 1 litre. | |

35 cubic centimeters of this solution correspond to 700 cubic centimeters of physiological serum isotonic to blood serum.

For the preparation of the electroserum, in the apparatus, the capacity of which is 700 cubic centimeters, are introduced 35 cubic centimeters of concentrated solution and cold water is added up to the line marked level.

The apparatus is then hermetically closed by means of a clip 25 on the tube 18 and a clip 25 on

the tube 22, direct or rectified current of 110–120 volts is then caused to pass into the apparatus.

The electrolysis takes place and the temperature of the liquid rises. Seven minutes are sufficient, with a current of about 2 amperes, a half-period of which only is rectified, for raising the temperature from 12 to 37° centigrade. The operation is terminated. A short stirring is effected for stirring the liquid with the gases contained in the apparatus and the electroserum is ready.

For using the electroserum, the two clips 25, 25 are removed and compressed air is sent, by means of the bulb 17, on the surface of the electrolyte. The electroserum is projected through the tube 22 and the distributing nozzle 23 on the wound to be disinfected.

The individual portable apparatus has a capacity of one litre; its weight is about 4 kilograms; the time of preparation 4 to 7 minutes according to the intensity of the current.

This apparatus allows the immediate production in every place where sick people are treated, infirmaries, operating theatres, wound-dressing wards, chemists, doctors' consulting rooms, etc. places where the electroserum is extemporaneously used. This apparatus operates with direct or alternating current with a small consumption of current. The product is always under pressure and at the temperature of 37° C.

The tonicity of the serum, variable at will, depends on its use, it is isotonic to blood serum for the treatment of wounds, it corresponds to tears for the eyes and for that purpose 65 cubic centimeters of concentrated solution instead of 35 cubic centimeters are introduced into the apparatus which give a liquid containing, as tears, 13.9 grams of salt per litre. For urinary passages the solution, as urine contains 10.74 grams of salts, and for that purpose, 50 cubic centimeters of concentrated solution are placed in the apparatus.

The hypochlorinated, hypo iso or hypertonic liquor necessary is therefore rapidly available, luke-warm and ready for use in the best physiological conditions.

Fig. 8 is an elevation of the apparatus 9' producing the serum for clinical purposes forming a fixed apparatus or mounted on a carriage. The approximate weight empty is of about 7 kilograms. The capacity is 8 litres. The time of preparation is 20 to 35 minutes according to the current. The electroserum is always under pressure and at the temperature of 37° C. The clinical apparatus allows of treating one after the other a great number of injured without being recharged.

The solution to be subjected to electrolysis is contained in the glass barrel 26. The current rectifier 27 is supported by the barrel by means of two hoops 28, 28. The positive and negative electrodes are illustrated at 29 and 29' and the wires connecting the rectifier to the mains at 30 and 30'.

Figs. 9, 10 and 11 illustrate the clip 31 constituted by a perforated and folded sheet steel strip.

A stopper 32 made of ebonite comprises a conduit 33 for the admission of compressed air through the pump and the tube 35. The stopper is clamped on the neck of 26 by a yoke 32' and through the medium of a fluid-tight packing 32''. The electroserum can be projected on the wounds by the tube 36 and the distributing nozzle 37.

The electrolysis takes place as in the individual apparatus during the electrolysis, the clips 31 close the tubes 35 and 36 and ensure a fluid-tight closure for the enclosure with the atmosphere. When the electrolysis is terminated, the clips 31 are removed from the tubes 35 and 36 and the electroserum is projected on the wounds by actuating the pump 34.

The rectifier 27 is a usual device using a single alternation; the current can pass only in one direction, a half-period passes in the rectifier whereas the other is stopped owing to the properties of unilateral conductibility of the lamp. The clinical apparatus comprises an interrupter which cuts off the current as soon as the temperature of the serum tends to exceed 37 degrees. A movable blade carries a platinized contact (movable contact) which presses on the fixed contact owing to a tension spring. A bellows, controlled by the pressure due to the electrolytic gases which are produced during the operation and which are function of the pressure of the liquid the temperature of which must not exceed 37°, acts on the movable terminal. When the force due to the pressure of the gases (temperature exceeding 37 degrees) becomes higher than the strength of the spring, the movable contact moves away from the fixed contact and cuts off the current.

With rectified alternating current, at the precise moment when the current is cut off, if an arc tended to be initiated, it would automatically spread out during the fraction of second during which the current does not pass (alternation stopped).

Direct current passes without interruption; it is then necessary that the breaking of the direct current should occur by an instantaneous and wide spacing apart of both contacts. Use is made of the interrupter above mentioned but modified according to Fig. 12. On the screw threaded tail member of the fixed contact 38 is screwed a small iron rod 39 a few centimeters long on which are wound a few turns of wire 40 which are traversed by the current passing through the apparatus 9'.

39 and 40 constitute an electromagnet one of the poles of which is the fixed contact 38 itself. The movable contact 41 is attracted both by the electromagnet 39—40 and by the tension spring 42. For breaking the current, it is necessary that the force due to the pressure of the electrolytic gases should become greater than the strength of the spring increased by the attraction of the electromagnet. As soon as the breaking takes place, magnetization ceases and the movable blade 41 suddenly moves away as the force of the bellows 43 is then much greater than that of the spring 42.

The present invention is not limited to the examples described and illustrated above by way of indication and not in a limiting sense. It is defined by the characteristic features above set forth and includes in its scope all means and combinations of means adapted to carry out said features in order to obtain the results sought for and for all applications.

The forms, materials, dimensions, details, accessories and applications can vary according to circumstances without departing from the scope of the invention.

PIERRE MAX RAOUL SALLES.

PUBLISHED
MAY 18, 1943.
BY A. P. C.

P. M. R. SALLES

PROCESS FOR THE ELECTROLYTIC PRODUCTION OF NEUTRAL HYPOCHLORINATED SOLUTIONS, MEANS AND APPARATUS USED AND NEW PRODUCTS OBTAINED

Filed Feb. 3, 1939

Serial No. 254,376

2 Sheets-Sheet 1

Fig. 5.

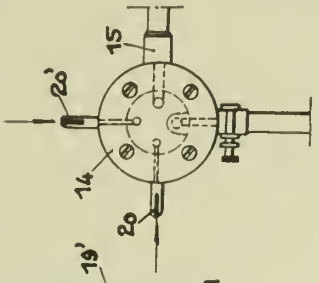


Fig. 7.

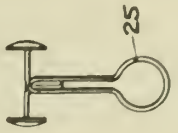


Fig. 4.

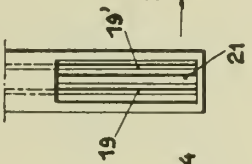


Fig. 6.

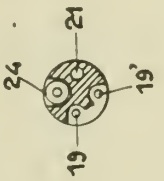


Fig. 2.

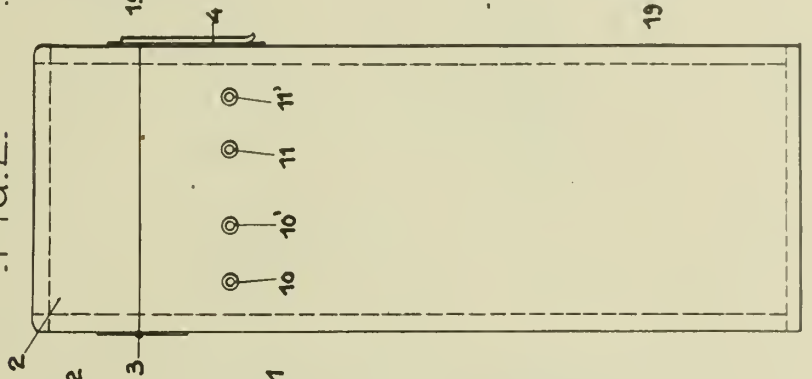


Fig. 1.

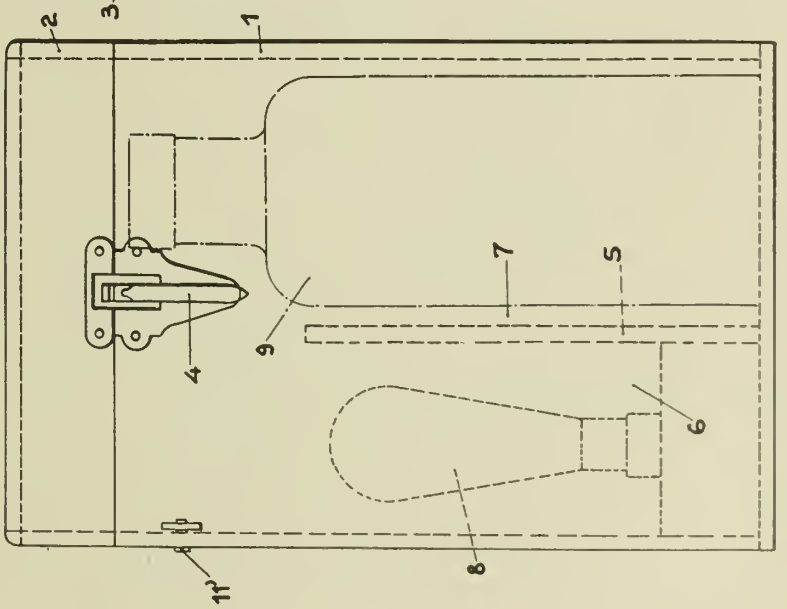


INVENTOR:
PIERRE MAX RAOUL SALLES
BY Haseltine, Lake & Co.
ATTORNEYS

PUBLISHED
MAY 18, 1943. BY A. P. C.

P. M. R. SALLES
PROCESS FOR THE ELECTROLYTIC PRODUCTION OF NEUTRAL HYPOCHLORINATED SOLUTIONS, MEANS AND APPARATUS USED AND NEW PRODUCTS OBTAINED
Filed Feb. 3, 1939

Serial No. 254,376

2 Sheets-Sheet 2

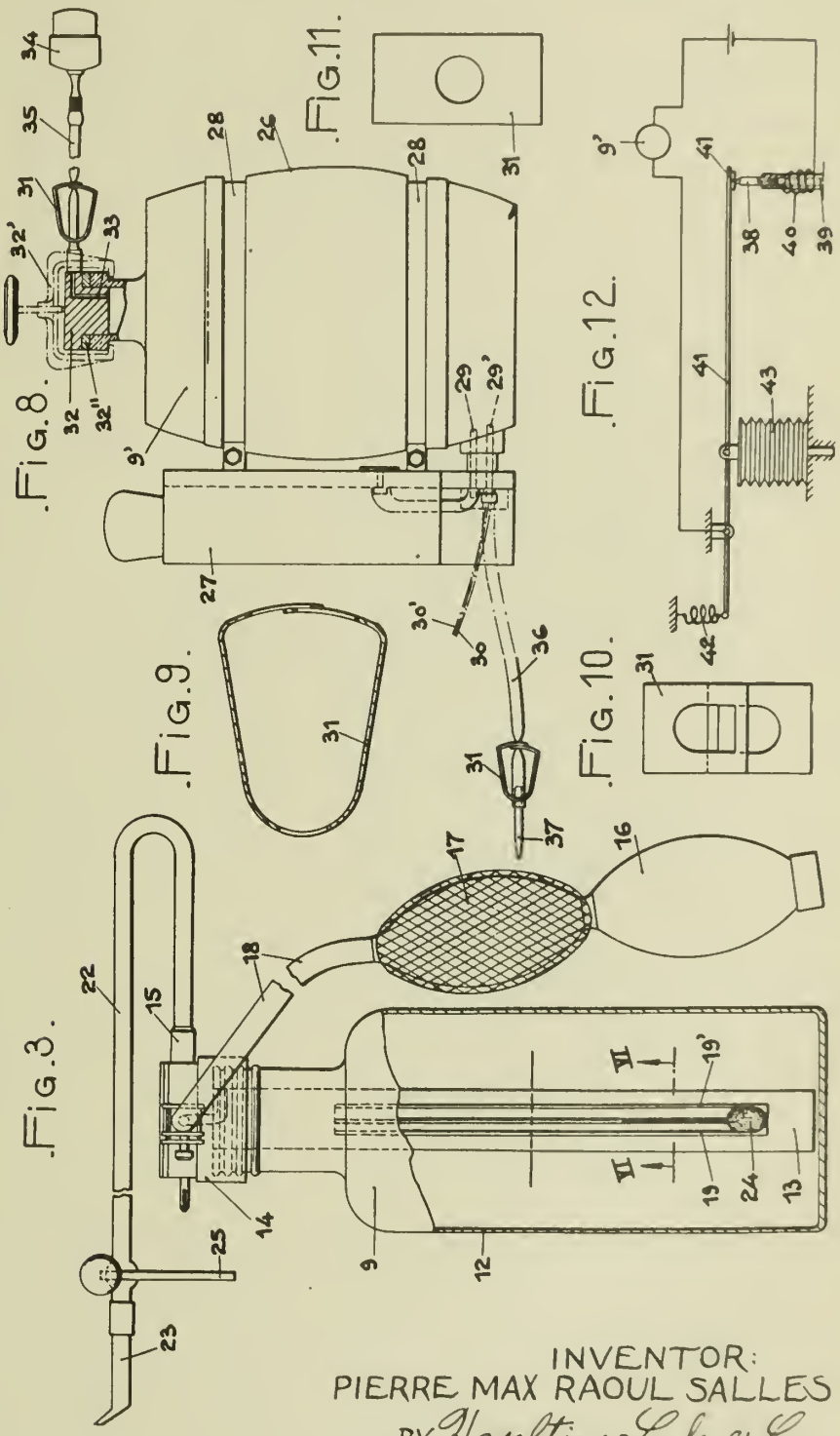


INVENTOR:
PIERRE MAX RAOUL SALLES
BY Haseltine, Lake & Co
ATTORNEYS

Published May 18, 1943 Serial No. 254,743

# ALIEN PROPERTY CUSTODIAN

## METHOD AND APPARATUS FOR SEISMIC UNDERGROUND PROSPECTING

Raymond Maillet, Paris (16E), France; vested in the Alien Property Custodian

Application filed February 4, 1939

It is known that in seismic underground prospecting methods, the time intervals elapsing between the emission of elastic waves from a given point and the return to the ground surface of said waves after reflection on the geological discontinuity surfaces of the underground are measured and observed by means of a plurality of seismographs suitably distributed over the surface of the ground or near said surface. From the various time intervals corresponding to the respective seismographs, it is possible to deduce the speeds of propagation, if the latter have not been determined in advance by direct measurements made in big bore-holes, and the depths of the various reflecting horizons, as well as their dips, in magnitude and azimuth. It is thus possible to obtain very accurate and very complete information concerning the tectonic structure of the underground.

Thus, seismic underground prospecting is very similar to echo methods as used in hydrography. As a matter of fact, this remark was made by Harvey C. Hayes, in a paper read on March 21, 1923 and published in the Journal of Franklin Institute (March 1924, pages 323 to 354). In particular, he made the following statement:

"The echo method of determining depths is not confined to determining submarine depths. It should serve equally well for determining the depths below the earth's surface of abrupt changes or discontinuities in the earth's crust such as are offered by coal and oil deposits or subterranean caverns. These surfaces of discontinuity will reflect to the surface a part of any sound disturbance that may be transmitted to them.

The train of sound or elastic waves is produced in any suitable manner, but most often by detonation of a charge of explosives, with sufficient stemming, placed for instance at the bottom of a small bore hole of a depth of some yards or some tenths of yards and filled with water. Or again this charge is placed on the bottom of a river, a lake, or the sea, or is buried in a furrow made in the ground with a linear density of charging sufficiently low to produce a camouflet effect. The seismographs, suitably distributed on the ground surface, but most generally buried at a small depth so as to protect them against the action of wind and, as far as possible, aerial sounds, collect the elastic energy fed by the various waves thus emitted, and transform it into electrical energy. The electromotive force supplied by each seismograph depends upon the displacement, or the speed, or again the acceleration of the ground, or upon one or several derivatives of this acceleration, at the point where the seismograph is located, or upon a combination of these factors. After having been suitably amplified and filtered, the tensions supplied by the respective seismographs are transmitted to a multiple oscillograph which records them on a band of paper, or a photographic film, or otherwise, together with a signal indicating the time at which the waves were emitted, and the marks of an accurate time counter, for instance an electrically operated tuning fork. The oscillograms obtained are studied with a view to determining, among all the information supplied by the seismographs, that which corresponds to waves returned from the subterranean space after reflection on a geological contact, and to determining their time of propagation.

Theory and experience have taught that the propagation of the waves from the point of explosion is a highly complex phenomenon. On the one hand there are condensation waves, on the other hand distortion waves, both of these kinds propagating in all directions, and finally, close to the surface, bi-dimensional waves, especially the so-called Rayleigh and Love waves. These surface waves are the slowest; they have a considerable amplitude and this amplitude decreases rather slowly according to the distance of propagation, due to the fact that these waves are propagated only into two directions. They have a rather clear pseudo-periodic character and their frequency spectrum is essentially constituted by very low frequencies, say from 5 to 15 Hertz, by way of indication.

On the oscillographic records, it is of interest to eliminate the movements of the ground that are due to the waves of all kinds which have travelled close to ground or at a relatively low depth, and more especially the waves of the third kind, because these particular waves cannot give any interesting information concerning the geological and tectonic structure of the deep strata, but, on the contrary, risk over-charging the receiving apparatus, and anyway complicating the curves that are obtained, so that the identification of the reflected waves is made more difficult or even impossible.

These last mentioned waves, and especially the longitudinal reflected waves, have a highly complicated frequency spectrum, but the components that predominate therein are not so grave as those of the surface waves. By way of indication, the frequencies that predominate in reflected waves generally correspond to a range from 25 to 100 Hertz.

On the other hand, experience has taught that the discontinuity surfaces called "mirrors" give reflected waves such that, on the one hand the amplitude is lower, other things being equal, and. on the other hand, the frequency spectrum is poorer in sharp components, and therefore relatively rich in grave components, the lower the depth of these mirrors. The loss of amplitude is explained, at least partly, by the normal decreasing of this amplitude as a function of distance over which the wave has travelled and also by the energy losses due to the waves reflected by the successive geological contacts. The relative absorption of the sharp components in comparison with the grave components can reasonably be attributed to absorption and diffraction phenomena. For instance, some little coherent formations, such as sand, may be but imperfectly transparent. This phenomenon would be analogous to the gradual reddening of white light by fog.

Whatever be the causes, the first of the two above mentioned phenomena imposes the following conditions:

For given positions of the point from which the waves are emitted and of the seismographs, several successive experiments are necessary, with more and more intensive emissions, that is to say, as a rule with greater and greater charges of explosive. Low intensity emissions will permit of correctly recording the waves reflected from the shallowest mirrors. With the high intensity emissions, the over-loading of the apparatus and the distortion it produces, the intricate superposition of the various oscillographic tracings or the fact that they frequently run out from the field if the recording is effected by deviation, the reduction of the sensitized emulsion over its whole thickness if the recording is made with the variable density method, will not permit of observing the shallowest mirrors but, on the contrary, the deepest mirrors will supply reflected waves sufficiently intensive to be easy to discern on the oscillograms and to mark with accuracy.

But the fact of making several successive experiments at a given station involves a loss of time and money which should be avoided. It is possible to make a single experiment, with a sufficiently intensive emission of elastic waves for ensuring a suitable recording of deep reflections, provided that the sensitiveness of the receiving apparatus varies, according to a given law, as a function of the time having elapsed from the emission, and in such manner that the apparatus is never overloaded but that the gradual increase of sensitiveness as a function of time compensates the gradual decrease of amplitude of the successive reflected waves, in order to maintain a good readibility as the recording takes place.

As a matter of fact, it is still necessary, as a rule, to effect, in addition to the chief experiment above described, a recording with uniform and maximum sensitiveness corresponding to a low intensity emission, in order to determine, for each of the seismographs, the time at which the front of the fastest superficial wave reaches it. This time intervenes in the calculation of the corrections to be applied for taking into account the presence, under the ground surface of strata more or less decomposed by atmospheric and biologic influences and in which the conditions of propagation are abnormal.

The problem of automatically controlling the sensitiveness is similar to those existing is audible or ultra-audible sounding for the determination of submarine depths.

In this field of application, this problem was solved by automatically varying, as a function of time, the sensitiveness of the thermionic valve amplifiers interposed between the wave receiver (microphone) and the recorder. This automatic variation of sensitiveness is for instance obtained by varying, as a function of time and for one or several of the tubes of the amplifier, the polarization of their control grids.

On the other hand, the fact that, in the frequency spectrum of the reflected waves, the predominating components are less grave than is the frequency spectrum of the superficial waves has been used for a long time for eliminating or reducing the disturbing action of these superficial waves. The amplifiers have been rendered selective, and even have been combined with complete filters, the cutting off frequency being chosen low enough for allowing the gravest reflected waves to pass without too great an alteration, and high enough for intercepting the superficial waves as far as possible.

The object of the present invention is to take advantage of the property of the reflected waves of being relatively the richer in low frequencies as they come from the deepest mirrors.

This result is obtained, according to the present invention, by varying the frequency curve of the amplifiers as a function of the time having elapsed since the time of emission, in such manner as to permit the passage of components which are the graver the more considerable the time thus elapsed.

With this system, at the beginning of the experiment, the cutting off frequency or the passing band can be chosen relatively high for ensuring a good elimination of the superficial waves. This cutting off frequency or this passing band is then automatically varied and generally lowered gradually along the frequency scale, so as to permit a good recording of the waves which have been reflected from the deep mirrors, the superficial waves having then disappeared or, at least, having but reduced amplitudes which permit this lowering.

According to another feature of the invention I combine this characteristic with the automatic variation of sensitiveness as a function of time.

Another object of the present invention is to provide a device for obtaining these results.

Other features of the present invention will result from the following detailed description of some specific embodiments thereof.

Preferred embodiments of the present invention will be hereinafter described, with reference to the accompanying drawings, given merely by way of example, and in which:

Fig. 1 is a diagrammatic explanatory view illustrating the arrangement of the apparatus and the travel of the waves in the ground;

Fig. 2 is a diagram showing, by way of example, a recorded curve system;

Fig. 3 is a general view of a system according to my invention, including one of the seismographs, its amplifier, and a recording element, with means for automatically varying selectivity;

Fig. 4 shows another embodiment of the amplifier, ensuring automatic variation, as a function of time, both of selectivity and sensitiveness;

Fig. 5 is a partial view showing another embodiment of the invention;

Fig. 6 is a diagram showing, by way of example,

a sensitiveness curve corresponding to the arrangement of Fig. 5;

On all the figures, the same reference characters designate the same parts.

Fig. 1 shows a diagrammatic section of the ground. The waves are emitted from center 1, the initial shock being generally produced by a charge of dynamite the importance of which depends upon the dimensions of the field which is to be studied, the charge being more considerable the deeper the mirrors to be detected.

I have shown the path of travel of the superficial rays, as well as that of the rays reflected from a deep mirror 2. These waves are received at suitably chosen points by means of suitable seismographs 3, connected through electric lines with a recording center provided with amplifiers 4 and a multiple recorder 5.

The recording of the various curves is generally effected on the same band in such manner as to obtain, for instance, the curves shown by Fig. 2.

In order to obtain the automatic variation of selectivity as a function of time, a method consists in disposing, at the input end of amplifiers 4, or between two stages of said amplifiers, a frequency filter of the high-pass kind, that is to say a filter which permits the passage of frequencies higher than a predetermined value and constituted, for instance, by a cell including two reactance coils in shunt with the line and a condenser in series therewith.

It is known that the cutting off frequency of a filter of this kind depends upon the value of the capacity of this condenser.

By varying this capacity, I obtain therefore the desired variation of the selectivity.

Fig. 3 diagrammatically shows a device for obtaining the automatic variation of the selectivity.

In this system, 6 is the charge of explosive located at the point of emission 1 of Fig. 1, and the ignition of which is produced by an electric detonator 7 operated by battery 8 through switch 9 and wires 10.

Battery 8 feeds in parallel the primary 11 of a transformer the secondary 12 of which is connected to the grid 13 of a vacuum tube 14.

The plate circuit of this tube is connected to the coil 24 of an electro-magnetic clutch located at the recording station and which is hereinafter described.

Reference numeral 3 diagrammatically shows a seismograph acting through a suitable line on the grid 15 of a vacuum tube 16 also located at the recording station.

In the plate circuit of this tube is inserted the filter above mentioned, this filter consisting of two reactance coils 17—18 (generally with iron cores) mounted in shunt with respect to the line and the ends of which, opposed at their common point, are connected respectively to the two armatures of a variable condenser 19. The output of this filter feeds current to the other stages, diagrammatically shown at 20, of the amplifier, which controls one of the oscillographs of recorder 5.

Reference numeral 22 designates an electric motor which is started a short time before the charge of explosive is ignited. This motor drives, by means of an electro-magnetic clutch diagrammatically shown by the two plates 23, the rotor keyed on the spindle 25 of the variable condenser 19. This electromagnetic clutch is itself actuated by coil 24 which is inserted in the plate circuit of tube 14.

This apparatus works in the following manner:

Electric motor 22 turning at its normal speed, switch 9 is operated. During the short period of time (some thousandths of a second) necessary for bringing the filament of detonator 7 to incandescence, the source of current 8 is practically short-circuited and, consequently, the intensity in the primary 11 of the transformer is negligible.

The short-circuit approximately produced in the detonator is eliminated at the time of the explosion. This produces a substantial output or flow of current through primary 11, and therefore an induced electromotive force at the terminals of secondary 12. The connections of the transformer are designed in such manner that this electro-motive force increases the potential of grid 13, whereby the plate current of tube 14 increases substantially at the time of the explosion. As a consequence, clutch 23 is let in and the rotor of condenser 19 is started rotating.

The outline of the blades of this condenser is chosen in such manner as to obtain the desired law of variation.

The impulses received by seismograph 3 are amplified by tube 16, and only the frequencies lower than the cutting off frequency are transmitted to the next stages 20 of the amplifier and to recorder 5.

This arrangement permits of obtaining the desired result, to wit an automatic variation of the cutting off frequency as a function of time.

It is clear, that the high-pass filter 17—18—19 might be completed by a low-pass filter including variable condensers also keyed on axis 25 which is driven through clutch 23. In this way, the last stages 20 of the amplifier would receive only frequencies ranging within two given limits variable as a function of time. The ensemble of the two filters (the high-pass filter and the low-pass filter) might be replaced by a band filter. On the other hand, it is clear that filter 17—18—19 might be constituted in any other way, the same as the control of clutch 23 might be made differently.

Fig. 4 shows another embodiment of the amplifier in which I obtain both the automatic variation of selectivity and that of sensitiveness.

The automatic variation of sensitiveness is obtained in this case by varying the polarization of the grids of one of the stages of the amplifier.

This stage is constituted by a tube 27, itself fed with current through a pre-amplifier 26, controlled by seismograph 3.

The polarization of the control grid 28 of tube 27 includes a constant portion supplied by battery 29 and a variable quantity which is given by the voltage drop across resistance 30.

This resistance receives the discharge current of a condenser 31 which is charged by battery 32 across the contacts 33 of a relay, normally closed, the coil 34 of which receives the plate current of a tube 14, mounted exactly in the same manner as in the example shown by Fig. 3. Therefore, this coil 34 replaces the coil 24 of this Fig. 3.

It will be readily understood that, at the time of the explosion, coil 34 attracts its armature which opens contacts 33. Therefore, condenser 31 is gradually discharged through resistance 30. It follows that the polarization is maximum at the time of the explosion and decreases in a continuous manner as a function of time. The constants of the law according to which it de-

crcases are adjustable owing to the choice of condensers 31, through switch 35 and of the adjustable point of contact on resistance 30. Therefore, in this way, I fix on the one hand the time of relaxation of the variable polarization and, on the other hand, the initial value thereof. It goes without saying that these two adjustments might be obtained otherwise.

The plate current of tube 27 is in turn transmitted, through a transformer 21, to the other stages 20 of the amplifier which fced current to rcorder 5.

It will be readily understood that, as a consequence of the variation of the polarization, the plate current of tube 27 increases in a continuous manner as a function of time. It therefore follows that a parasitic signal is produced which would be transmitted to the next stages of the amplifier. In order to climinate it, I mount in opposition on tube 27, according to a well known arrangement, an identical tube 37 the control grid of which, 36, receives the variable polarization from rcsistance 30, but of course does not receive the signal from 26. Therefore, transformer 21 is of the push-pull type as shown by the drawing.

Furthermore, on the control grid 36 there is mounted a potentiometer 39, which permits of adjusting the polarization of 36, in such manner as exactly to balance the increases of the ancde currents of tubes 27 and 37, when there are variations of polarization at the terminals of resistance 30. Furthermore, I insert, if need be, a resistance 40 in the grid circuit 36 to balance the impedance introduced in the circuit of grid 28 of tube 27 through the pre-amplifier 26.

It will be noted that tube 27 is constituted by a pentode the suppressor (the grid closer to the anode) of which is connected to the cathode, the screen grid being directly connected to the plate.

On the other hand, in this tube, it is very advantageous to arrange this control grid in such manner that the spires thereof are at intervals which increase gradually from one end of this electrode to the other end thereof. In other words, it is advantageous to employ, as tubes 27 and 37, so called "selectode" or "supercontrol" tubes.

This arrangement permits of obtaining the automatic variation of selectivity as a function of time. It is known that the variation of the plate current of a thermionic valve as a function of the frequency is the greater (for a predetermined variation of the control grid tension) the lower the internal resistance of the tube, the influence upon the plate current of the charge impedance (constituted in this case by transformer 21) being the more considerable as the internal resistance is lower.

In order fully to explain this point, it should be remembered that, below the secondary resonance and dispersion frequencies, a transformer coupling, (such as that obtained with 21) produces, in point of fact, the same effects, to within a constant factor (equal to the transformation ratio $a$), as a coupling obtained through a reactance coil $L_1$ constituted by the primary of this transformer. If $R_1$ designates the total resistance of the primary circuit, essentially constituted, in this case, by the internal resistance of tube 27, the gain is given by the following formula:

$$\frac{Ka}{\sqrt{1+\left(\frac{R_1}{L_1\omega}\right)^2}}$$

in which K designatcs the factor of amplification of tube 27 and $\omega$ the circular frequency of the signal.

For a given value of said frequency, the gain increases, other things being equal, when resistance $R_1$ decreases. Therefore the range of the frequencies that are transmitted will gradually extend toward lower and lower frequencies, as the time elapses from the explosion, if the internal resistance of the tube gradually decreases. Now, the gradual disappearance of the grid polarization available at the terminals of resistance 30 will gradually open a passage for the electrons through the zones of tube 27 where the pitch of the control grid 28 becomes smaller and smaller and thus gradually lower the internal resistance of tube 27.

It should be noted that the problem in this case is exactly the inverse of the conditions existing in radio-telephony for the amplification of high and mean frequencies with an automatic control of the gain. In this case, it is endeavoured to make tubes, the internal resistance of which is, under all circumstances, very high as compared with the charge impedance. This is the reason why selectodes are, in a general manner, tubes having a screen grid (tetrodes, pentodes, etc.) and why it is difficult to find, on the market, selectode triodes, that is to say tubes of this kind having a grid pitch variable along said electrode. But it is clear that the present invention might be carried out by employing, as tubes 27 and 37, such selectode triodes, if they were constructed. As a matter of fact this is not necessary because I have found by experience that, by taking pentode tubes of the E. F. 5 type or of the American 956 pentode gland, and by connecting, in these tubes, the screen grid to the plate, I obtained the equivalent of a low internal resistance triode. Furthermore, the value of this internal resistance varies gradually and within wide limits in accordance with the negative polarization of the control grid. Therefore, tube 27 (and also, of course, tube 37) can be merely constituted by 956 type, or E. F. 5 type tubes, or the like, in which the screen grid is directly connected to the plate.

It will be noted that, in the arrangement illustrated by Fig. 4, the law of variation of the polarization as a function of time is necessarily an exponential law (discharge of a condenser across a resistance). If it is desired to obtain another given law, the polarization variation is controlled through an arrangement of the kind of that shown by Fig. 5. This arrangement includes the motor 22 of the embodiment of Fig. 3, with its clutch 23 controlled by coil 24 fed with current through tube 14.

Shaft 25 carries in this case a cam 41 (shown in front view on the drawing) cooperating with a finger 42 applied against the periphery of said cam by a spring 43. This finger controls the sliding contact 44 of a variable resistor 45, acting as a potentiometer owing to the provision of a battery 47. With such an arrangement, the potential difference between the end 46 of the resistance and finger 44 varies automatically as a function of the time. This voltage replaces that existing across the terminals of resistance 30 in Fig. 4.

By suitably choosing the outline of cam 41, it is easy to obtain any desired law of variation, without any limitation.

In particular, this variation permits of obtaining a variation of the sensitiveness as a function

of time such that sensitiveness is higher at the beginning, then drops rapidly to a relatively low value, and subsequently increases in a continuous manner as a function of time. The curve of sensitiveness corresponding to this is that of Fig. 6. This arrangement permits of correctly recording the front of the fastest superficial waves, the times of arrival of which correspond to portion A of the curve, of eliminating the high amplitude oscillations of the superficial waves which come next, and in particular the Rayleigh or Love waves which arrive during the time period corresponding to portion B of the curve, and finally of correctly recording the reflected rays coming from deeper and deeper mirrors.

Of course, the above mentioned arrangements are not the only possible embodiments of the invention within the scope of the principle thereof.

In particular, in the arrangement of Fig. 4, I might arrange tubes **27** and **37** in such manner as to constitute a true push-pull system, the signal coming from pre-amplifier **26** being applied, in phase opposition, to grids **28** and **36**, according to a well known mounting, the variable polarization voltage being of course the same in magnitude and direction for each of the grids.

It is clear that, in this case, the increases of current, in the anode circuits, resulting from variations of polarization still eliminate each other.

RAYMOND MAILLET.

PUBLISHED
MAY 18, 1943.
BY A. P. C.

# R. MAILLET

METHOD AND APPARATUS FOR SIESMIC UNDERGROUND PROSPECTING

Filed Feb. 4, 1939

Serial No.
254,743

2 Sheets-Sheet 1

1

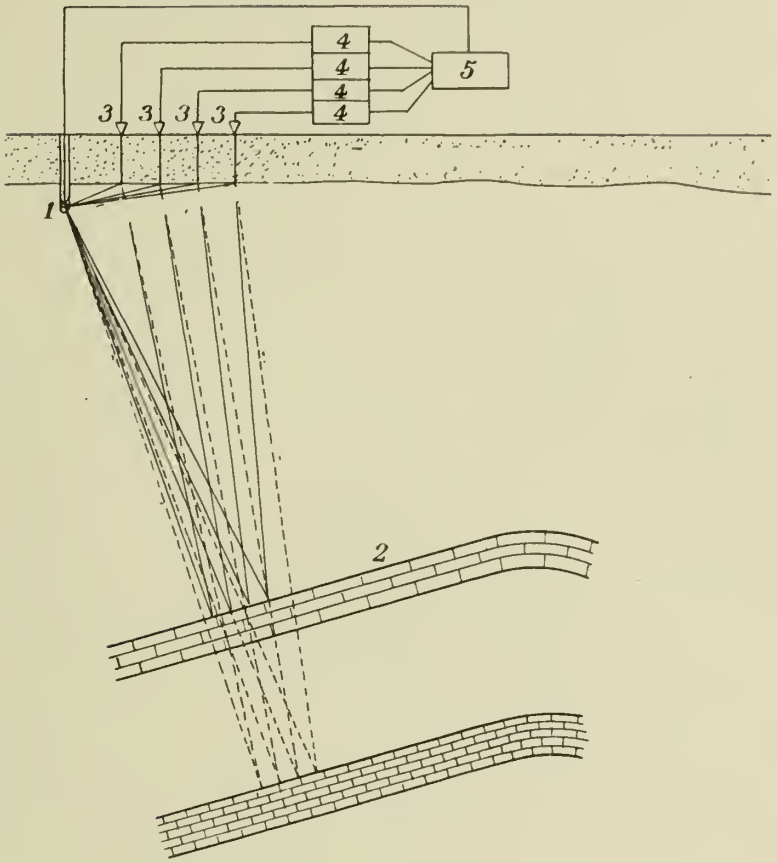


2

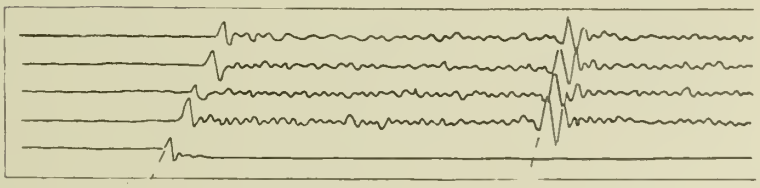

INVENTOR
Raymond Maillet
by Benj. Chroney
Attorney

PUBLISHED
MAY 18, 1943.
BY A. P. C.

R. MAILLET
METHOD AND APPARATUS FOR SIESMIC UNDERGROUND PROSPECTING
Filed Feb. 4, 1939

Serial No.
254,743
2 Sheets-Sheet 2

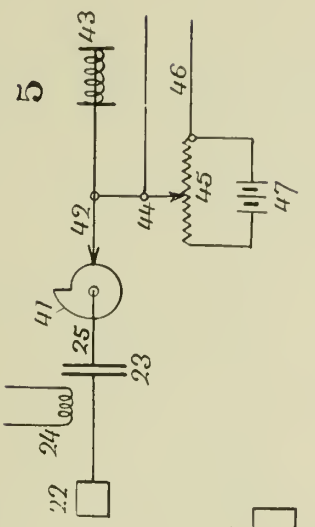


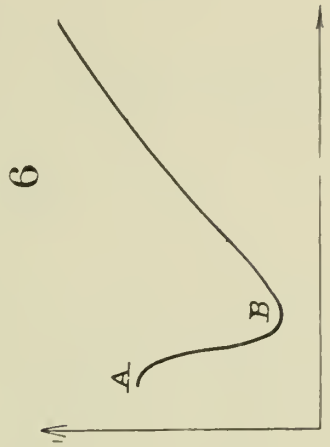


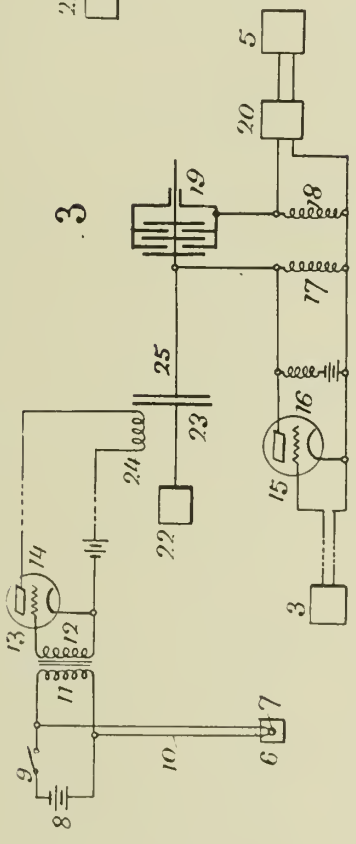


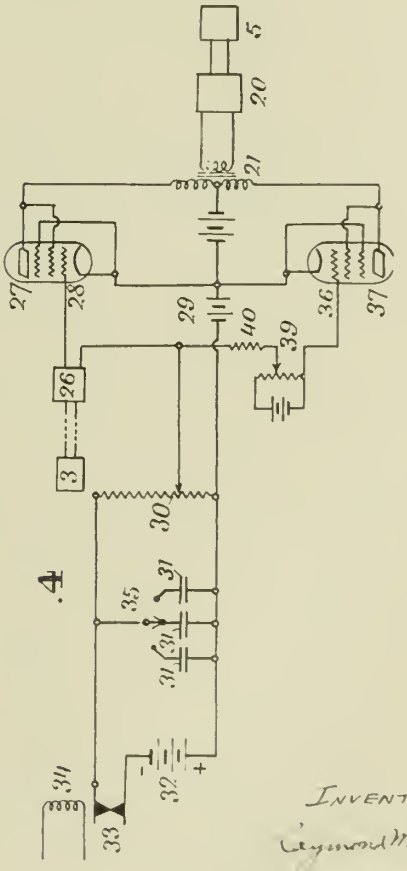


INVENTOR
Raymond Maillet
by Ray) Adams
his attorney

Published May 18, 1943 Serial No. 258,571

# ALIEN PROPERTY CUSTODIAN

## ELECTRIC CONDUCTORS

Jean Lepetit, Clichy, France; vested in the Alien Property Custodian

No Drawing. Application filed February 25, 1939

The present invention relates to the manufacture of electric conductors composed of one or a plurality of single or divided conducting or resistant cores which are insulated from a metal sheath by a powdered mineral insulating material.

It has already been proposed, for manufacturing conductors of this category, in particular when the finished product is obtained by elongation of a suitably dimensioned blank, to use a mineral insulating material in the highly compact and totally dehydrated state.

The insulating material usually employed hitherto in these manufactures is ordinary magnesium oxide.

The applicant has observed that, when the bare ends of such a conductor are left exposed to the atmosphere, a decrease occurs in certain of the dielectric qualities.

Thus if a section of conductor, the ends of which are not provided with fluid-tight devices and wherein the free edge of the dielectric is in direct contact with the atmosphere, is exposed in an atmosphere of average hygrometric degree, temperature and pressure, it is observed that its insulating resistance per kilometre which was, for example, 10,000 megohms at the end of its manufacture, gradually decreases.

It is an easy matter to follow the law of variation of this resistance proportionally to the time of exposure and to plot the curve of same. Experience shows that, after a more or less long time, said curve reaches a value below which it practically does not fall.

In the case of a conductor which is insulated with ordinary magnesium oxide, said value is about 100,000 ohms when the radial thickness of the insulating material is 1.5 mm. and in the above circumstances of exposure.

Now, if the conductor is cut at a certain length, for example at a few centimetres, from each of the ends of the section, substantially the initial value of insulating resistance is found again. The variation if insulating resistance observed is an end phenomenon and, independently of the insulating resistance per kilometre of the conductor itself or of the line formed by same, it is possible to define a "limiting insulating resistance per free end."

In the above mentioned case, the mean value of the limiting insulating resistance per free end is about 200,000 ohms.

It would appear that these phenomena originate from a certain reabsorption of the atmospheric moisture by the insulating material, in the part adjacent its edge which is exposed to the contact of the air.

The decrease of the insulating resistance may be considerable, in particular when the insulating material is ordinary magnesium oxide.

It is necessary to have recourse to end devices in order to obtain a satisfactory fluid-tightness, in the absence of which devices the absolute value of the insulating resistance of the line quickly falls and reaches substantially one half of the value of the limiting insulating resistance of each end.

According to the present invention, for the manufacture of electric conductors of the category in question, insulating materials are employed such that the conductors manufactured have a higher limiting insulating resistance per free end than that obtained with ordinary magnesium oxide, i. e. higher than 0.2 megohm for a radial thickness of insulating material of 1.5 mm.

Moreover, the insulating material may be so chosen that the absolute value of the limiting insulating resistance of the line itself is higher than a predetermined value taking into account the number of free ends.

If it is desired, for example, to guarantee the line an absolute insulating resistance value of 500,000 ohms under the above mentioned average conditions, for a conductor having a radial thickness of insulating material of 1.5 mm., if there are only two free ends an insulating material will be chosen of which the limiting insulating resistance per free end is not lower than 1 megohm.

Among the insulating materials which have this property, oxides or compounds of calcium or of other similar substances will be chosen in particular.

The applicant has found, in fact, that although very hygroscopic, calcium oxide placed under the conditions to which it is subjected between the core of the conductor and the metal sheath, gives the means of obtaining a very much higher limiting insulating resistance per end than what had hitherto been obtained and in particular very much higher than that of conductors insulated with ordinary magnesium oxide.

In a practical example in which calcium oxide was employed, the limiting insulating resistance per end was found to be higher than 20 megohms, for a radial thickness of insulating material of 1.5 mm.

Powdered insulating materials which are capable of "swelling" are generally suitable for this

purpose, that is to say those, such as calcium oxides or compounds, which cannot absorb moisture or in a general manner combine with air or its constituents without increasing in volume. The insulating material is, in fact, bound by the sheath which forms an obstacle to its swelling and consequently to the absorption of moisture.

Powdered insulating materials which, in the region of their contact with the air, are capable of forming a film which is impervious or at least only slightly sensitive to moisture, for example owing to a natural action such as that of the carbonic acid of the air, are also suitable.

With conductors thus constructed, it is furthermore possible either to eliminate any end device, or to make use of less fluid-tight devices which are consequently less costly to manufacture.

For the manufacture, the powdered insulating material used is totally dehydrated before the usual mechanical treatments of shaping, drawing, etc., the insulating material being introduced into the rough shape, either in the powdered state, or in the shape of agglomerated blocks in a highly compact state, or in any other shape, or by means of any other methods. It is possible, in particular, to effect the total dehydration by heating the insulating material under appropriate conditions until it no longer loses weight; in practice, for ordinary calcium oxide, such dehydration is complete when it had been subjected to a temperature of 900° to 1000° C. for several hours.

The invention also covers the use of insulating materials having the properties claimed, and in particular calcium oxide, either in the state of homogeneous mixtures, or by radial or longitudinal juxtaposition of different insulating materials in contact with each other. The invention covers in particular the wires, cables or conductors of the category in question which have the properties described and in which the dielectric is binary and is formed by calcium oxide and magnesium oxide, whatever be the proportion of the two substances. The applicant has proved that in this case, the highest limiting insulation resistances is obtained when the proportion of calcium oxide relatively to the whole is between 25 and 40% and that, on the other hand proportions which are advantageous for the process are either lower than 15% or higher than 90%.

It is advantageous, in particular when the insulating material is introduced into the rough shape in the form of agglomerated blocks, to add to said insulating material a certain proportion of boron oxide, so as to form a homogeneous mixture the presence of which has, amongst other advantages, the effect of facilitating moulding, in particular by making stripping easier, and in certain cases of improving at the same time the limiting insulation resistance per free end.

Satisfactory results gave thus been obtained by using a homogeneous mixture comprising:

| | Parts |
|---|---|
| $CaO$ | 30 |
| $MgO$ | 70 |
| $B_2O_3$ | 1 |

Good results have also been obtained by using a homogeneous mixture comprising:

| | Parts |
|---|---|
| $MgO$ | 91 |
| $B_2O_3$ | 9 |

These proportions are only given by way of example.

Preferably and in order to ensure a homogeneous mixture, the boron oxide is added in solution to the mixture in the state of paste from which, by drying to a suitable degree, the powdered insulating material will be prepared, which insulating material will then be subjected to the usual treatments such as agglomeration in the shape of insulating blocks, dehydration, introduction into the rough shape, etc.

Moreover, without exceeding the scope of the invention, the improving insulating material such as calcium oxide, boron oxide or the like may be introduced into the homogeneous powdered insulating material only in the zone of each end of the conductor.

The invention also covers electric conductors in which the dielectric is composed as stated above.

JEAN LEPETIT.

Published May 18, 1943 Serial No. 260,226

# ALIEN PROPERTY CUSTODIAN

## ELECTRIC CONDUCTORS

Philippe Eugène Henri Eichinger, Clichy, France;
vested in the Alien Property Custodian

No Drawing. Application filed March 6, 1939

The present invention relates to the manufacture of electric wires, cables or conductors composed of one or a plurality of single or divided conducting or resistant cores which are insulated from a metal sheath by a powdered mineral insulating material.

It has already been proposed, for manufacturing wires, cables and conductors of this category, in particular when the finished product is obtained by elongation of a suitably dimensioned rough shape, to use a mineral insulating material in the highly compact and totally dehydrated state.

The insulating material usually employed hitherto in these manufactures is ordinary magnesium oxide.

The applicant has proved that the hitherto employed insulating materials, in particular ordinary magnesium oxide, do not possess any natural rigidity and the breakdown voltage of the conductors they serve to form is of the same order of magnitude as if the insulating layer were replaced by air.

In fact, said breakdown voltage is, on an average, about 3,000 volts when the thickness of the insulating material is 1.5 mm. and 4,500 volts when the thickness reaches 3 mm., etc.

Now, these are precisely the breakdown voltages of conductors composed of a cylindrical core and of a likewise cylindrical outer sheath which are separated by air, the constant distance between the two armatures of the condenser thus formed being, according to cases, respectively 1.5 mm., 3 mm., etc.

It would therefore appear that, in these conductors, everything takes place as though the purpose of the insulating material employed was to define and ensure the geometrical position of the core in the transverse section of the sheath, without imparting any quality of natural rigidity to the dielectric.

The present invention provides a very considerable improvement in the processes for manufacturing conductors of this category.

Said invention consists in imparting to the dielectric by an appropriate treatment of the finished product, a property of rigidity which it does not naturally possess and which will hereinafter be called "extrinsic dielectric rigidity", so that the conductor will be characterized by a higher breakdown voltage than that of air, even if the insulating material used naturally possesses a property of dielectric rigidity that is only equal to that of air.

For this purpose, at the end of its manufacturing process, the conductor will be subjected to a treatment of such a nature as to allow permanent pressures to subsist in the insulating material which substantially increase its dielectric rigidity.

Research work done by the applicant has shown him that the dielectric rigidity of a powdered mineral insulating material is, to a certain extent, proportional to the value of the resilient pressures which may occur between the particles of the insulating material. Now, for a conductor which is in the process of manufacture and at a certain phase of drawing, such pressures vary within wide limits, according to whether the metal of the sheath is in the cold-hammered state or whether on the contrary it has just been annealed.

It will in fact be understood that, everything being moreover equal, said pressures of the insulating material are greatest when the conductor has just undergone the final drawing operation during which it has reached its final dimensions, since economy is naturally an incentive to continue said drawing operation as far as, inter alia, the drawing qualities of the metal allow.

Now, the metal of the sheath is then in an advanced if not in a maximum state of cold-hammering, so that for delivering the cable to the consumer it is necessary to anneal the metal if it is desired to avoid in particular the risk of a breakage of the sheath during the bendings it will undergo when the conductor is being placed in position and installed.

By annealing the conductor, the insulating material will lose the state of resilient pressure in which it was, and its extrinsic dielectric rigidity will disappear with it.

Now, the applicant has proved that the state of resilient pressure of the insulating material varies to a very slight extent between the instant when a conductor which has been annealed is subjected for example to a very slight pass even without elongation of the rough shape, and the instant when, on the contrary, drawing is continued up to the limit beyond which a break would be produced.

Thus, if the sheath of a previously annealed conductor is very slightly cold-hammered or shaped, for example by an appropriate additional pass, in such a manner as not to exceed for example 5% of the "total elongation" of the metal, it is found that the resilient pressure of the insulating material has returned to very substantially its maximum value, and with it has regained its highest extrinsic dielectric rigidity, although the metal of the sheath can still undergo 95% of its "elongation" and consequently, in

practice, still leaves the conductor itself with all its mechanical properties and in particular its flexibility.

It is an easy matter in practice to ascertain the extent of said additional pass. It may be said that it can be chosen in such a manner as to "shape" the sheath until the instant when the insulating material reaches the limiting pressure (defined in French patent No. 795,277) that is to say until the instant when a more considerable pass, however small it may be, would cause the homothetic elongation of the core of the rough shape.

The applicant has proved, in fact, that the ratio between the dielectric rigidity of a conductor having a powdered insulating material which is treated as just explained and the dielectric rigidity of the same conductor after having undergone annealing, is greater than 1.2.

The present invention includes within its scope the use of means which are capable of placing the powdered insulating material in a permanent state of resilient pressure, capable of imparting to it a property of extrinsic rigidity and in particular the use, for the manufacture of the electric conductors in question and whatever be the process employed for carrying it out, of the method of operation of shaping the sheath, which method is characterized by the fact that the metals of the sheath and of the core have both retained almost their entire capacity of cold hammering and even of their property of elongation, and by the further fact that the dielectric rigidity of the insulating material of the conductor in the latter state considered is at least 20% greater than the dielectric rigidity of the same sample of conductor which has been subjected to an annealing treatment.

In a practical example, a conductor of about 5.3 mm. outside diameter of sheath and having an insulating layer of about 1.5 mm. thickness made of a mineral with no property of intrinsic dielectric rigidity, ordinary magnesium oxide for example, is characterized by a breakdown voltage of about 3,000 volts, after the last annealing operation of the series of metallurgical treatments of the manufacture and if the process just described is not applied. If, on the contrary, a very slight shaping is effected, for example by a drawing operation which reduces the outside diameter of the sheath to 5.2, the breakdown voltage of the same conductor becomes higher than 4,000 volts.

Of course, the invention applies whatever be the number of cores of the conductor, the metal which they and the sheath are made of and the particular refractory powdered insulating material used. Said invention covers, by way of new industrial products, conductors of the above mentioned category wherein the dielectric rigidity is at least 20% greater than the rigidity of the same conductor which has undergone annealing.

PHILIPPE EUGÈNE HENRI EICHINGER.

Published May 18, 1943 Serial No. 260,252

# ALIEN PROPERTY CUSTODIAN

## TRACTOR CONTROL

Ferdinand Porsche, Stuttgart-N, Germany;
vested in the Alien Property Custodian

Application filed March 7, 1939

This invention relates to improvements in tractor control and more particularly to the control of the power transmitted from a tractor engine to the driving wheel.

An object of this invention is the provision of an improved arrangement for controlling a tractor in accordance with the characteristics of a load upon said tractor.

Another object of this invention is the provision of a fluid coupling intermediate the engine and driving wheels of a tractor.

A further object of this invention is the provision of a novel arrangement for controlling the speed of a tractor engine connected to the driving wheels through a fluid coupling.

A more specific object of this invention is to provide a simple control for the engine of a tractor connected to the driving wheel through a fluid coupling, which permits the complete attendance of the operator to the control of the load, such as a plow or other soil working devices.

With these and incidental objects in view, the invention consists in certain novel features of construction and combination of parts which are set forth in the appended claims, and a preferred form of embodiment whereof is hereinafter described with reference to the drawings which accompany and form part of the specification, wherein:

Fig. 1 is a side view, partially schematic and partially cut away, of a tractor arrangement illustrating a preferred embodiment of construction;

Fig. 2 is a cross-sectional view on a larger scale along the line II—II of Fig. 1; and

Fig. 3 is a cross-sectional view along the line III—III of Fig. 2.

In a preferred form of the invention, schematically illustrated in Fig. 1, the engine indicated at 1 is interconnected through the fluid coupling 2, preferably of the hydrokinetic type, speed change gearing 4, intermediate gears 4, 5 and bevel gears 6, 7 with the driving wheel 8. It will be noted that in this preferred form of construction the fluid coupling 2 acts as the sole clutching device.

The tractor is adapted to pull a load, such as a soil working device, here illustrated as a plow 9. The engine throttle and brake controls are for the convenience of the operator mounted upon the end of the plow handle 10. The throttle lever has been indicated at 11 as pivotally mounted upon a bracket 12. The bracket 12 is provided preferably with a guiding slot 13 receiving an adjustable throttle lever holding device 14, the purpose of which will be explained in more detail hereinafter. A suitable brake control for the tractor is indicated at 15. The manner in which the throttle lever 11 and the brake control 15 actuate the respective fuel supply and brakes on the main tractor body is of no particular importance with respect to this invention and have not been shown. It is sufficient to say that this control may be effected through suitable levers, wires, ropes, etc. as is well known to those skilled in this art.

It will be noted that in Fig. 1 three throttle lever positions A, W and E have been indicated. The position A, being one end position of the throttle lever provides for full running speed of the tractor. In other words, when the throttle lever 11 is in the position A sufficient fuel is supplied to the engine so that it will run at the desired working speed. The other end position E is carefully chosen so that in this position of the throttle lever 11 sufficient fuel is supplied to the engine to maintain it in continuous running operation, but, however, at such a speed that the torque developed will not be sufficient to start the tractor and its accompanying load. This arrangement is only made possible by the use of the fluid coupling 2 intermediate the engine at the driving wheel. If instead of the hydraulic coupling, the usual friction clutch were substituted it would be impossible to maintain the engine in a running condition while the tractor and its load stood still without actually disengaging the friction clutch. However, by choosing the proper speed of the engine, the resulting torque will not be sufficient to move the apparatus, but only to cause slipping of the fluid coupling. This arrangement is of extreme advantage when the soil working apparatus is being operated by a single attendant. The control of the entire arrangement is accordingly much simpler than in the usual construction heretofore used since only one operation upon the part of the attendant is required, namely moving the throttle lever into the position E. This automatically takes care of the fuel supply and at the same time it is not necessary to actuate other levers such as a clutch lever. This arrangement becomes of more particular importance when the tractor is pulling a load such as a plow and meets an obstacle such as a large stone which will tend to stop the tractor.

In the operation of soil working devices, such as plows, frequent turning is often required such as when the plow comes to the end of a furrow,

as for example, in a small field. At such a time, it is obvious that the speed of the tractor must be reduced in order that the turning operation can be easily carried out. At the same time the attendant must work the plow such as lifting it up and putting it down again in the new position. By means of the novel control disclosed in the present invention, the attendant can turn all his attention to the proper operation of the plow, as the speed of the tractor will be automatically taken care of. The intermediate position of the throttle lever indicated in Fig. 1 as W is such a position as will supply sufficient fuel to the tractor engine to give a proper turning speed. In order that this position will be maintained I have provided a special type of abutment or holding device so that when the lever is once in its proper turning-speed position no further operation of the throttle on the part of the operator is necessary.

The releasable holding device for the throttle lever 11 in its intermediate or turning-speed position is illustrated in more detail in Figs. 2 and 3, drawn upon a larger scale than the comparable parts illustrated in Fig. 1. The throttle lever is first provided with a small cut-out portion 16 of a size suitable to receive the head 17 of an engaging pin 18. This pin is urged toward the lever by means of a spring 19, and when the pin head 17 and cut-out portion 16 coincide, engagement will result. The spring means 19 reacts against a nut 20 threaded upon a slider in the slot 13 of the bracket 12, which at the same time permits adjustment of the slider within this slot. It will be seen that upon unscrewing the nut 20 the slider may be moved to any position within the slot and that upon tightening the nut the slider together with its pin 18 will be held in the desired position. This adjustability of the turning-speed position of the throttle lever is desirable since the turning-speed may vary depending upon the type of soil working device, type of soil, or speed of the apparatus.

In order that time may be saved in placing the throttle lever in the correct turning-speed position, the throttle lever 11 may, if desired, be formed with shallow curved depressed portions on either side of the cut-out portion 16 in the direction of the acuate path of engagement between the pin 18 and the cut-out portion 16. Such depressed portions are illustrated in Fig. 3 as 21 and 22. It will be obvious that these portions facilitate moving the throttle lever 11 into the turning speed position, but do not effect the holding function of the cut-out portion 16.

As pointed out in the previous paragraph, provision is made for adjusting the locked turning-speed position of the throttle lever as desired. In some cases this may be placed at such a position that when the throttle lever is moved into its locked position the engine will not develop sufficient torque to drive the tractor and its accompanying load through the fluid coupling, but the engine speed will be maintained due to the slip of the fluid coupling. However, upon removal of the load, such as the lifting of the plow, the tractor will then move at the chosen turning speed until the plow is re-inserted into the ground. At that point the throttle lever will then be turned into the running position A for the plowing of the next furrow. By means of this type of control the operator may devote his entire attention to the turning of the tractor and the turning of the plow and no thought need be given to any control of the tractor engine itself.

Many of the advantages of the use of a hydraulic coupling intermediate a tractor engine and its driving wheel are at once apparent from the description of the invention as set forth above. As contrasted with the usual friction clutch, there are still further advantages. The shocks on the wheel and transmission, which are particularly severe in soil working operation, will not be transmitted to the engine through a fluid coupling as they are when a friction clutch is used. Not only do such shocks adversely affect the engine, but in addition react upon the friction clutch which must constantly be maintained in repair and such repairs are often necessary at a time when it is important that the tractor be used. By the use of a hydraulic coupling, on the other hand, such maintenance and repair are comparatively negligible. It will accordingly be seen that by using a hydraulic coupling in the manner proscribed there will be a resulting saving in both time and expense.

It will be obvious to those skilled in the art that the advantages of the proposed construction are not limited to the precise arrangement illustrated and described above. The use of the fluid coupling together with its attendant control is applicable to any type of tractor and in connection with any suitable source of power. As previously stated, the particular manner of effecting the control from the lever is unimportant as their manner and place of mounting. While only one arrangement of throttle control has been illustrated and described, it will be obvious, that in the broader sense, any similar type of control can be used. The essence of the invention lies in the use of the fluid coupling intermediate the tractor engine and its driving wheel which will provide an apparatus which will be of all the flexibility of control of the soil working apparatus as is true when such apparatus is pulled by farm horses or other working animals.

FERDINAND PORSCHE.

PUBLISHED
MAY 18, 1943.
BY A. P. C.

F. PORSCHE
TRACTOR CONTROL
Filed March 7, 1939

Serial No.
260,252

Fig. 1

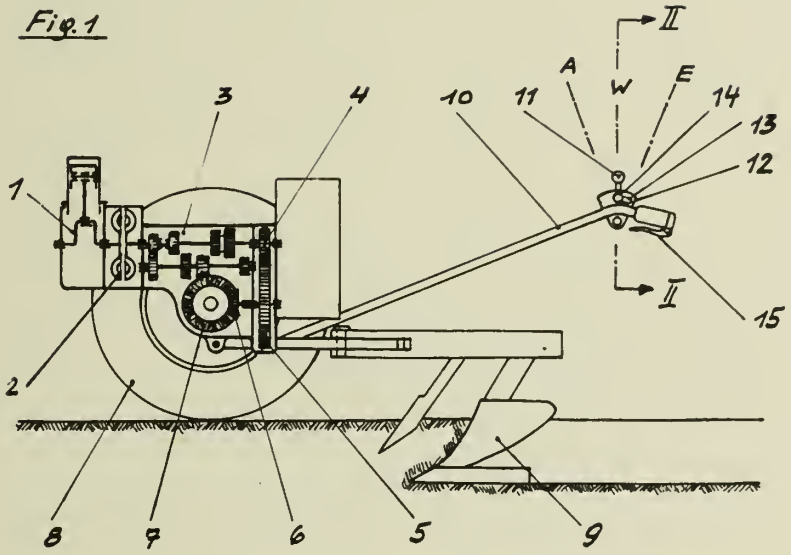


Fig. 2

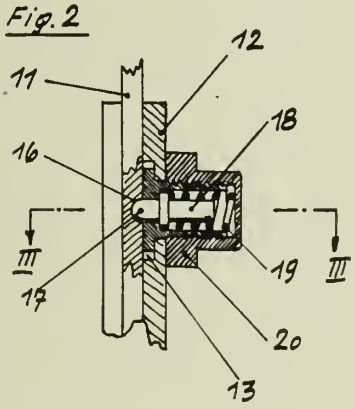


Fig. 3

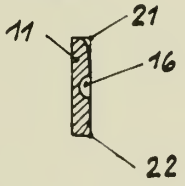


Inventor
FERDINAND PORSCHE
By A. A. Kleiber
Attorneys

Published May 18, 1943 Serial No. 262,800

# ALIEN PROPERTY CUSTODIAN

## APPARATUS FOR PRODUCING WATER-TAKING LAYERS ON BOTH SURFACES OF LIGHT-METAL FOILS

Hermann Wolff, Berlin NW 87, Germany; vested in the Alien Property Custodian

Application filed March 18, 1939

My invention relates to an apparatus for making light-metal foils, with water-taking layers on both surfaces. Foils of this kind are described in my co-pending application Ser. No. 154,262, for Light Metal Foils, filed July 17, 1937, of which the present application is a divisional.

It is an object of my invention to provide an apparatus for producing the water-taking layers on the two surfaces of the foil under economic conditions, i. e., by treating many foils together for a short period.

To this end, I provide a vat for an electrolyte with a pair of conductor bars extending along the vat and supplied with alternating current. The clamps by which the foils are suspended from the bars, are equipped with conductors for alternately connecting the successive foils to one and to the other bar.

It is another object of my invention to provide an apparatus in which the foils are also subjected to the action of direct current in order to improve the operation of the apparatus.

To this end, I arrange a second bar at the side of each alternating-current bar and connect the second bars to the positive terminal of a source of direct current. A lead electrode is arranged at either end of the vat and connected to the negative terminal of the direct-current source. Additional conductors are provided on the clamps for alternately connecting the successive foils to one and to the other second or direct-current bar.

By these means, I obtain a given number of foils with the water-taking layers on both surfaces for every cycle of operation, and the layers are finely porous and uniform. If, in the case of foils of aluminium, or aluminium alloy, the electrolyte is very weak, at the rate of not more than ½% of acid in the solution, and is used at room temperature, the water-taking layers are satisfactory and consist substantially of aluminium oxide, or aluminium hydroxide.

In the accompanying drawing, apparatus embodying my invention are illustrated diagrammatically by way of example.

In the drawing

Fig. 1 is a perspective illustration of an apparatus for treating a set of foils, with the front wall of its vat partly broken away.

Figs. 2 and 3 are perspective illustrations of clamps for suspending the foils from the conductor bars of the vat, showing the alternating connection of successive foils to the bars.

Fig. 4 is a section on the line IV—IV, and

Fig. 5 is a section on the line V—V in Fig. 2.

Fig. 6 is a diagram of connections.

Referring now to the drawing, and first to Fig. 1, the vat 1 of the apparatus if filled with electrolyte, preferably of the abovesaid concentration, and at room temperature. Conductor bars 2 and 3 are arranged along the sides of the vat and supplied with alternating current from a suitable source, not shown, and 4 and 5 are the second bars referred to which are connected to the positive terminal of a source of direct current, not shown. Electrodes 6 and 7, of lead, are arranged at opposite ends of the vat 1 and connected to the negative terminal of the source of direct current. The direct-current bars and electrodes may be dispensed with. If only alternating current is used the vat 1 may be open at the top.

The foils *a* are suspended from the bars 2, 3 and 4, 5, if the latter are provided, by suitable clamps 13 as will be fully described below. A perforated plate 8 is placed below the lower ends of the plates *a* and at a short distance above the bottom of the vat 1. Compressed air is introduced into the space below the plate 8. The streams of compressed air issuing from the holes in the plate 8 rise in the electrolyte and remove the gas bubbles which form during the operation. A vent 11 is provided for removing the mixture of gas and air from the vat.

The foils *a* are suspended in the space between the inner surfaces of electrodes 6, 7 in parallel relation to each other and at right angles to the bars 2, 4 and 3, 5. The clamps 13 which engage the foils between their jaws 13′ are preferably made of hard rubber and equipped with a spring tending to force their free ends against the foil *a* from both sides.

The two jaws are recessed near their ends and contacting plates 14 and 15 are inserted in the recesses. Fig. 2 shows the position of the contact plates 14 and 15 in that jaw which is in front. The contact plates are in the recess at the right of this jaw and engage the alternating-current bar 2 and the direct-current bar 4 at the corresponding side of the vat. In the recess at the left, the insulating material of the jaw bears directly on the alternating-current bar 3 and the direct-current bar 5 at this side of the vat.

Fig. 3 shows the position of the clamp 13 on the subsequent foil where the clamp 13 is reversed with respect to its position in Fig 2. Here, the contact plates in the recess at the left engage respectively the alternating-current bar 3 and the direct-current bar 5 at that side of the vat while in the recess at the right the insulating material bears on the bars 2 and 4.

Fig. 6 shows diagrammatically the position of the contact plates 14 and 15 in a first foil *a* and the subsequent foil *a*, and it will be understood that in the third foil they are again in the same position as in the first one, etc.

A contact strip 16 is connected to each plate 14 and another contact strip 17 is connected to each plate 15, the strips being spaced apart for a distance almost equal to the length of the jaws at their lower ends. The wires connecting

the plates and strips are embedded in the insulating material of the jaws whose strips engage opposite surfaces of the foils, as shown in Fig. 4 for the strips **16**, and in Fig. 5 for the strips **17**.

It will appear that in each pair of successively arranged foils the foils are alternately connected to the bars at their opposite ends. Thus, the end of the first foil *a* adjacent its vertical edge **12'** at the right, Fig. 2, is connected to those bars **2**, **4** which are at the same side of the vat at this end of the foil, and conversely the end of the subsequent foil *a* adjacent its vertical edge **12'** at the left, Fig. 3, is connected to the bars **3**, **5** at the same side as this end of the foil, and opposite to the end connected in Fig. 2.

With a weak electrolyte of not more than ½% of acid in the solution, as described, and with alternating and direct current, foils are obtained which can be used on both surfaces and are satisfactory for offset printing.

HERMANN WOLFF.

PUBLISHED
MAY 18, 1943.
BY A. P. C.

H. WOLFF
APPARATUS FOR PRODUCING WATER-TAKING LAYERS ON BOTH SURFACES OF LIGHT-METAL FOILS
Filed March 18, 1939

Serial No.
262,800

2 Sheets-Sheet 1

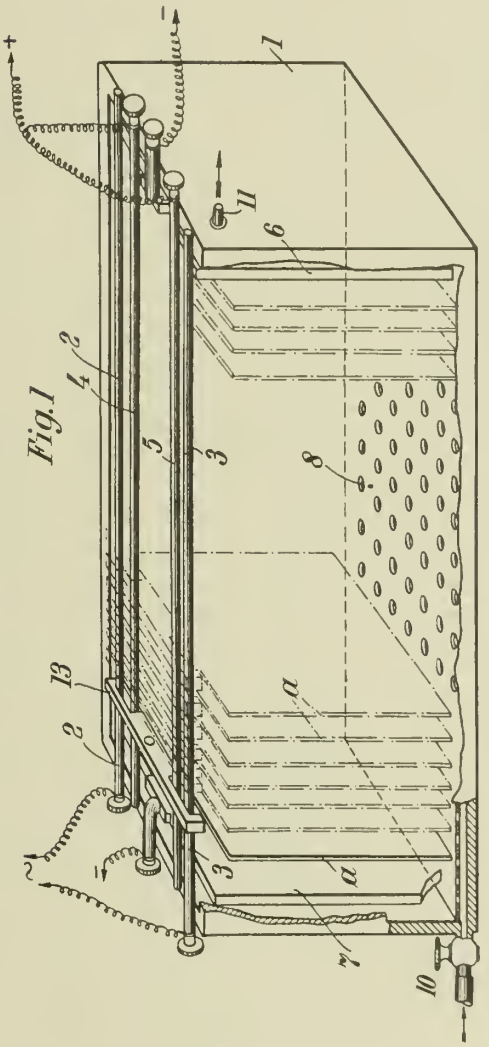


Inventor:
HERMANN WOLFF.

Maxwell E. Sparrow

BY

Attorney.

PUBLISHED
MAY 18, 1943.
BY A. P. C.

H. WOLFF

APPARATUS FOR PRODUCING WATER-TAKING LAYERS ON BOTH SURFACES OF LIGHT-METAL FOILS

Filed March 18, 1939

Serial No. 262,800

2 Sheets-Sheet 2

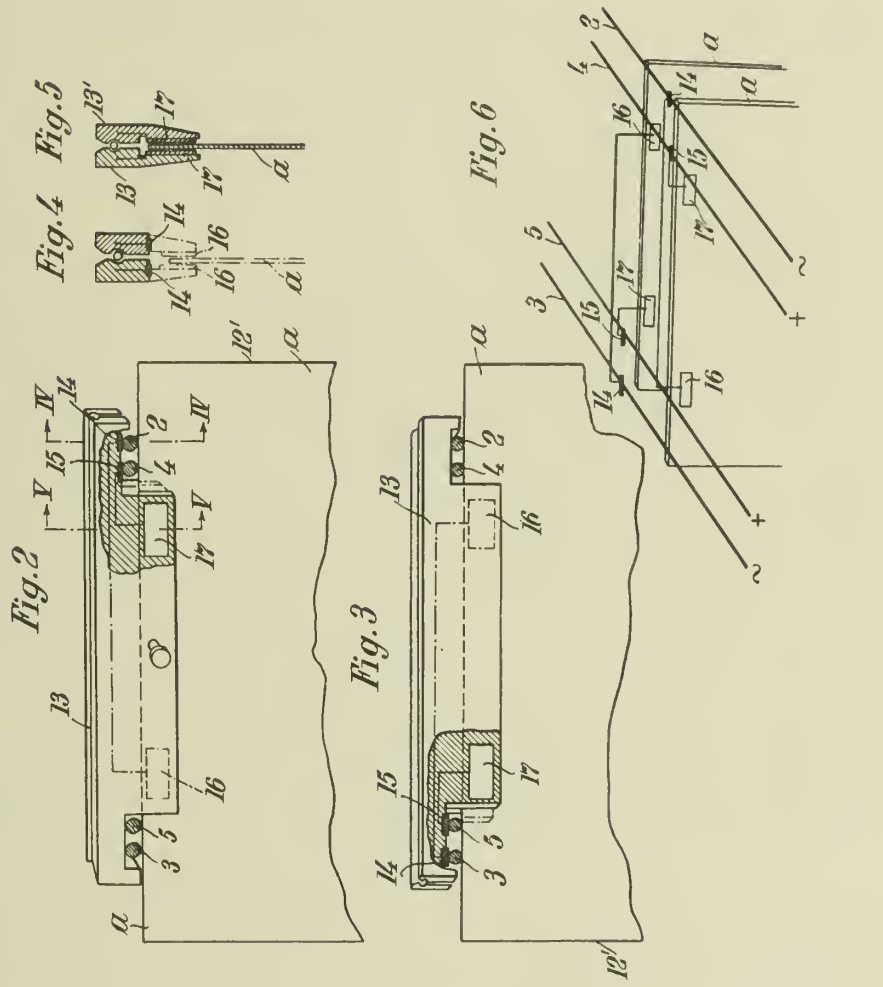


Inventor:
HERMANN WOLFF.
By Maxwell E. Sparrow
Attorney.

Published May 18, 1943 Serial No. 263,378

# ALIEN PROPERTY CUSTODIAN

## PROCESS FOR THE PRODUCTION OF OXIDIC PROTECTIVE COATINGS ON MAGNESIUM OR MAGNESIUM ALLOYS

Gerhard Elssner and Ernst Schröder, Leipzig, Germany; vested in the Alien Property Custodian

Application filed March 22, 1939

Different processes are already known for the production of oxidic protective layers on magnesium or magnesium alloys by anodic oxidation in alkaline baths.

Strong alkaline baths were first proposed containing about 60 gr. KOH per litre, in which the magnesium object was submitted at room temperature to the action of alternating current, or as anode to the action of continuous current.

Moreover baths are known which, besides similar or smaller amounts of alkalies, contain carbonates, cyanides and if necessary also other additions. In such baths the oxidation of the magnesium must be carried out at temperatures between 20° C and 25° C. Finally baths have also been proposed which require it is true a high temperature of from 80 to 90° C but have a considerably lower alkalinity than the baths before mentioned. According to this proposal the electrolyte must consist of an aqueous solution of phosphates such as sodium phosphate, or acid ammonium phosphate. In this case the pH number must be over 6, and be further raised by addition of ammonia or ammonium salts. Already after an addition of 50 cc. of conc. ammonia, the pH number however, does not increase further and remains constant at about 11. The addition of ammonia or ammonium salts is accompanied by considerable inconveniences by heating the baths to 80–90° C at which temperature ammonia is evolved in large amounts. Thereby a continuous and uneconomic addition of ammonia becomes necessary, and the workmen are very must inconvenienced by the gas evolved. The increase in layer thickness very soon ceases, on account of the rectifier action of ammoniacal phosphate solutions, and also with higher bath voltages there may be maintained only a very small residual current. Moreover salt deposits make the protective layers unusable on long hanging on.

It has now been surprisingly found that considerably better results may be obtained if the oxidation of the magnesium and its alloys is carried out in heated, strongly alkaline baths, of which the pH values lie above 12. The protective layers obtained with large excess of alkali are much harder and denser than those hitherto known. Above all however, in these baths at high temperatures the falling off of the current density occurs considerably more slowly. There thus does not occur so soon an automatically interrupted increase in thickness. The result thereof is that considerably stronger protective layers can be obtained. The new knowledge stands in contrast to the processes for the anodic oxidation of aluminium where strong alkaline baths cannot be used and any temperature increase leads to a diminution in the hardness and an increase in the porosity. According to the invention favourable results are obtained for example in baths heated to 50 to 80° C, and, which, if necessary besides other alkali compounds, contain such an amount of fixed alkali and/or alkaline earth hydroxides that the pH value lies above 12.

The drawing is a graphic illustration of the strength of layer of different protective layers which have been prepared partly according to known or proposed processes (Nos. 1–4) partly according to methods of carrying out the present process (Nos. 5–9).

The thicknesses of layers are given in the perpendicular ordinates in thousandths of a millimetre, whilst the horizontal ordinate shows the successive number of the experiments. With all the experiments shown in the drawing an amount of current of 30 ampere-minutes per sq. dm. of surface was employed. In the following are given the experimental conditions and the results in detail:

*Experiment 1.*—Electrolyte 50 g. ammonium biphosphate per litre. Ammonia addition up to pH=10.0. Temperature 85° C. Current density falls rapidly to 1 amp/sq. dm. Voltage 10 volts. After 5 minutes almost no layer. After 20 minutes, thickness of layer maximum 0.009 mm. in section. Not uniformly thick colour dark grey. After 30 minutes salt like deposits. Layer peels off.

*Experiment 2.*—Electrolyte 60 g. KOH per litre. Temperature 20° C. Current density 1 amp/sq. dm. Voltage 5 volts. After 30 minutes, thickness of layer 0.006 mm. Colour medium grey.

*Experiment 3.*—Electrolyte 50 g. NaOH. 50 g $Na_2CO_3$, 20 g. KCN 1 gm. $Na_2WO_4$ per litre. Temperature 22° C. Current density 3 amp/sq. dm. Voltage 16 volts. After 10 minutes 0.0023 mm. layer thickness, after 30 min. 0.0065 mm. layer thickness.

*Experiment 4.*—Electrolyte 50 g. NaOH. 50 g. $Na_2B_4O_7$. 20 g KCN per litre. Temperature 20° C. Current density 1 amp/sq. dm. voltage 10 volts. After 30 minutes 0.005 mm layer thickness with a strongly pitted surface.

*Experiment 5a.*—Electrolyte 40 g. NaOH per litre. Temperature 70° C. Current density 1 amp/sq. dm. Voltage 4 volts. After 30 minutes 0.013 to 0.014 mm layer thickness.

*Experiment 5b.*—Electrolyte 60 g KOH per litre. Temperature 60° C. Current density 2 amps/sq. dm. voltage 4 volts. After 15 minutes 0.012 mm layer thickness.

*Experiment 6.*—Electrolyte 100 g. NaOH per litre. Temperature 70° C. Current density 1 amp/sq. dm. Voltage 4 volts. After 30 minutes 0.014 mm. layer thickness.

*Experiment 7.*—Electrolyte 150 g. NaOH per litre. Temperature 70° C. Current density 1 amp/sq. dm. Voltage 3.4 volts. After 30 minutes 0.015 mm. layer thickness.

*Experiment 8.*—Electrolyte 200 g NaOH per litre. Temperature 70° C. Current density 1 amp/sq. dm. Voltage 3.4 volts. After 30 minutes 0.015 mm. layer thickness.

*Experiment 9.*—Electrolyte 150 g. NaOH, 75 g. $Na_2B_4O_7$ g. per litre. Temperature 70° C. Current density 1 amp/sq. dm. Voltage 3.7 volts. After 30 minutes 0.0135 mm. layer thickness.

The superiority of the anodic treatment carried out according to the invention shows itself however not only in the layer thickness but also in the nature, namely in the hardness, density adhesiveness and general appearance of the layers.

While the hitherto obtained layers were deposited more or less poor-looking grey or black, the layers deposited according to the invention show bright grey to whitish colours of enamel-like appearance.

In this way is also possible to bring about the subsequent coloration in bright colour tones.

A comparison of experiments **5***a* and **5***b* shows that equimolar solutions yield about the same results. The increase of the concentration of alkali hydroxide over 50 gm. per litre gives no appreciable increase in the layer thickness but however gives a further brightening of the colour as well as an increase in density and hardness.

GERHARD ELSSNER.
ERNST SCHRÖDER.

PUBLISHED
MAY 18, 1943.
BY A. P. C.

# G. ELSSNER ET AL
PROCESS FOR THE PRODUCTION OF OXIDIC PROTECTIVE COATINGS ON MAGNESIUM OR MAGNESIUM ALLOYS
Filed March 22, 1939

Serial No.
263,378

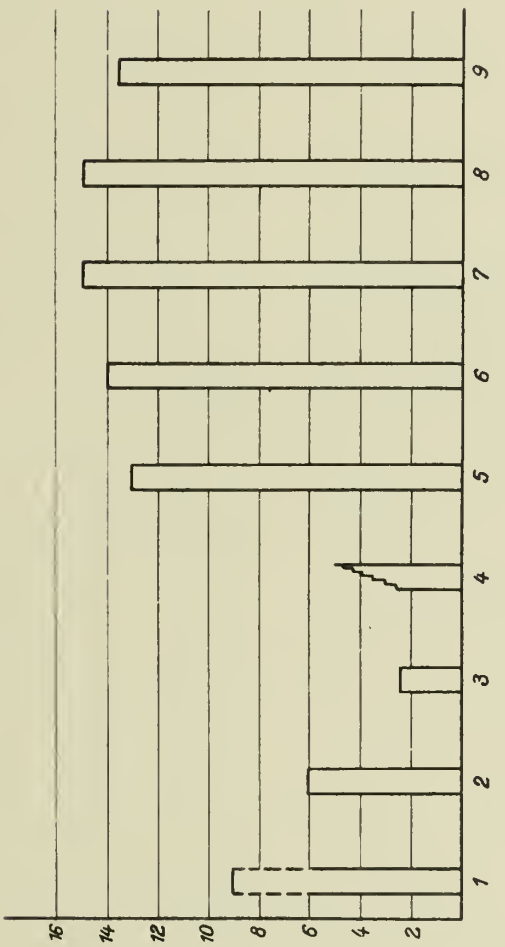


Inventors.
GERHARD ELSSNER
ERNST SCHRÖDER.
by Walter S. Bleistein
ATTORNEY

Published May 18, 1943 Serial No. 263,546

# ALIEN PROPERTY CUSTODIAN

## PROCESSES FOR THE TREATMENT OF SILICEOUS IRON-CONTAINING MATERIALS

Willy Stelkens, Koln-Marienburg, Germany; vested in the Alien Property Custodian

No Drawing. Application filed March 22, 1939

It is known that the iron oxide in iron ores can be reduced to magnetite by roasting in the presence of reducing coal gas and can then be enriched to a certain extent by magnetic separation. If, however, there is any stronger combination between iron oxide and silicic acid a concentration of the iron content cannot be obtained in this way because the reduced iron oxide remains coalesced with the silicic acid.

It has now been found that this difficulty can be obviated and the iron oxide can be loosened from the silicic acid to a much greater extent by subjecting the material containing iron and silicic acid, in particular of ores which have a low content of iron and a high content of silicic acid, to a special treatment. This treatment consists in maintaining a mixture of the starting material which contains iron and silicic acid, preferably in a state of fine subdivision, with mineral coal, brown coal, peat, bituminous shale or like carbonaceous combustible material at an elevated temperature which preferably does not exceed 600° C. while avoiding access of air or oxygen until carbonisation of the carbon-containing admixtures has occurred, after which the iron compounds can be separated, for example by a magnetic separator, from the residue which remains.

This loosening of the iron oxide from the silicic acid which is effected by the treatment of the present invention is due to the intense reactivity of the vapours from the carbonisation which, shortly after being released, have the tendency to decompose or crack at the elevated temperature. If therefore these vapours come into contact with metal compounds which contain oxygen, such as iron oxide, they remove oxygen from them by means of unsaturated hydroxyl groups with the formation of water. Since this formation of water proceeds within the molecular association at a temperature considerably above the boiling point of water, an excess pressure is probably produced in the molecular structure owing to the pressure of the steam which results in a thorough loosening. After this loosening has occurred the reduced iron oxide can be separated by mechanical means from the silicic acid.

The process in accordance with the present invention has great economical advantages in that, on the one hand, the loosening of the iron oxide from the silicic acid already takes place at the relatively low carbonising temperature of the admixed carbonaceous material, which in general lies between about 300 and 600° C., and, on the other hand, in that valuable carbonisation products can be obtained in the same operation.

The course of the reactions which take place in the process of the present invention can be favoured and the reaction promoted by conducting through the material being treated or through the furnace containing said material a combustible gas or other washing gas. A preferred gas is pure nitrogen which contains no considerable proportions of carbon dioxide and oxygen, such as obtained for example in the Linde process for producing oxygen and does not contain more than 1% of oxygen.

Again special advantages from the point of view of heat economy can be obtained by subjecting the siliceous iron starting material before its admixture with the carbonaceous carbonisable materials to a preheating, for example by means of heating or furnace gases and then mixing them in this preheated condition with the carbonaceous carbonisable substances which may in some cases likewise be preheated. By using siliceous iron-containing starting materials which have in this way been highly heated as heat carriers, the carbonisation temperature of the admixed carbon-containing materials can be reached, so that the indirect supply of heat can be considerably reduced and the carbonisation in indirectly heated carbonising furnaces in the absence of air is considerably facilitated.

If it is desired to obviate the necessity, after separation of the iron compounds, for isolating for economical reasons the carbonisation products from the silicic acid or of working the coke and siliceous reaction mixture to form a useful product, the process can be carried out in such a way, in accordance with a particularly advantageous modification of the invention, that the siliceous iron-containing starting materials are treated, preferably in a fine state of sub-division, at an elevated temperature which preferably does not exceed 600° with the vapours which are split off when mineral coal, brown coal, peat, bituminous shale and the like is carbonised, any direct mixing with the carbonisable materials being dispensed with. If the process is carried out in this way and the siliceous iron-containing starting material is treated, not in mixture with coal or the like, but only with the vapours from the carbonisation thereof, a product is obtained in which reduced iron compounds with silicic acid are present in loosened form and from which the iron compounds can be separated, for example by magnetic separation or with the aid of solvents, the extent of this separation being con-

siderable and far greater than was formerly possible.

In particular, when the process of the invention is carried out in this manner, the treatment may be undertaken in a furnace to which the iron-containing materials and the substances to be carbonised are supplied separately, preferably in counter-current. This can be carried out by passing the finely pulverised iron-containing substance on the one hand and the substances to be carbonised on the other hand in layers which are separated, for example by a wire network or separate supports, together through a carbonising furnace in such a way that the vapours from the carbonisation, as they are split off from the carbonaceous material come directly into contact with the iron-containing layer to be treated. By using the counterflow principle a large output of treated ore or the like can be obtained in uniform stages of treatment with a small charge of carbonaceous material.

According to a further modification of the invention, the operation is carried out in two furnaces which are in direct communication the one with the other, in one of which the carbonisation is carried out and in the other of which the iron-containing material is heated to the carbonisation temperature and is brought into intimate contact with the hot vapours discharged from the first furnace. In this case also reduction of the iron oxygen compounds and loosening of the iron from the gangue is obtained. After the treated material has cooled, the iron fraction which has been loosened or become magnetic can be separated in this case also from the silicic acid by a magnetic separator. Likewise the iron which has been freed from the silicic acid can be extracted from the loosened material by dissolving it out chemically.

It has further been found that it is advantageous in all cases to subject the material to be treated, before the separation of the iron compounds from the silicic acid, to a disintegrating process preferably to fine grinding as the separation is considerable facilitated by this means.

The processes of treatment of the present invention can be used for all siliceous iron ores, minerals, sands and other materials, as well as for bauxite and the residues which accumulate in the recovery of alumina therefrom, and also for pyrites, for example such as is obtained in addition to heavy spar at Meggen in Westphalia and other similar materials.

For carrying out the process of the present invention all carbonisable materials which on carbonisation evolve vapours or gases similar to those evolved by brown coal and mineral coal, such as for example various kinds of peat, bituminous shales, oil distillation residues and the like, can be used.

The consumption of carbonisable material in the process according to the present invention can be very considerably restricted while nevertheless maintaining favourable operating conditions. On the other hand, there are scarcely any losses of importance because the decomposed or cracked carbonisation product breaks up into lower benzines which can be recovered by condensation, while the carbonisation gas which is formed in large quantity can be utilised for heating the carbonisation furnace or the heater for the ore.

The iron ore concentrate which is accumulated in the form of a fine powder by the process of the present invention can either be melted out directly in a suitable furnace or after being briquetted can be introduced in a normal blast furnace.

*Example 1*

In a horizontal carbonisation furnace having a grate system of the Bartling-Honigmann type, the grate is sub-divided in such a way that coal and iron ore can be supplied to separate adjacent grate plates. The charging of the oven is carried out in such a way that 1000 kg of coal and 3000 kg of finely ground ore are passed together through the carbonisation zone. During this the grates are shaken so that an alteration of the position of the carbonisation material and also of the ore and therefore of its surface of contact with the gases continuously takes place. From the ore which has been pre-treated in this manner and is poor in iron and rich in silicic acid an iron concentrate which is suitable for being smelted can be recovered, after cooling, for example by magnetic separation.

*Example 2*

In a vertical carbonisation furnace which is externally heated, for example a furnace of the Borsig-Geisen type a carbonisable brown coal is carbonised. The hot vapours produced are drawn off and are conducted directly to a furnace for heating the ore which is of similar construction to known ore roasting furnaces and in which the ore is pre-heated to a temperature of about 500° C. and is kept in continuous movement by rotating the charge. This treatment loosens the finely disintegrated iron ore and the reduced iron oxide becomes more easly mechanically separable from the associated silicic acid. In some cases separation can be facilitated by grinding the treated material.

WILLY STELKENS.

Published May 18, 1943 Serial No. 266,187

# ALIEN PROPERTY CUSTODIAN

## PROCESS OF MANUFACTURING PETROLEUM-LIKE OIL BY DRY DISTILLATION OF A CARBONACEOUS MATERIAL

Hajime Isobe, Yodobashi-ku, Tokyo, Japan; vested in the Alien Property Custodian

Application filed April 5, 1939

This invention relates to a process of manufacturing petroleum-like oil by dry distillation of a carbonaceous material and consists in producing gas containing oil vapours by dry distillation of coal, brown coal, pitch, oil shale, timber or the like; passing the gas directly and without condensation through a separate reaction chamber stuffed with a catalyst comprising an adsorptive colloidal substance such as active charcoal, acidic clay, Florida earth, Fuller's earth, Kieselguhr and the like, which is preferably formed into granular or other suitable shape and kept at a temperature of 350° to 800° C., whereby converting the oil vapours contained in said gas into a vapour of stable petroleum-like oil; and then collecting same in liquid by cooling after taken out of the reaction chamber. The invention has for its object to readily produce petroleum-like oil, and especially rich in volatile oils, from coal, brown coal, oil shale, timber and the like, in an extremely simple manner with good yield.

It is well known that tar can be obtained by the way of dry distillation of coal or brown coal and the like. For instance, from coal or brown coal about 5% to 20% of tar may be obtained. Generally such tar contains about 40% to 50% of pitch and about 10% of gasoline, although the proportions more or less varies as the kind of the coals used. Moreover, said tar also contains other substances such as acidic oils, basic oils and paraffine, so that the tar can not be used as substitute of petroleum. In view of this, it is usually subjected to distillation or other treatment to separate it into paraffine, acidic oils, volatile oils, heavy oils and pitch, etc., or it is converted into gasoline by a destructive hydrogenation process under high pressure.

Although the chemical reaction which takes place when tar is produced by the so-called low temperature distillation of the above-mentioned raw materials is unknown, it may be chemically assumed that the hydrocarbons once vaporized from said raw material are condensed and converted into those of higher molecules when they are cooled, since such hydrocarbons contain those of unsaturated higher molecules and higher phenols, and by merely heating said products they are not readily vaporized, but undertake quite different decomposition to produce pitch, so that they do not return to the original vapour phase of hydrocarbons.

According to this invention, when the permanent gas containing oil vapours produced by dry distillation, that is, thermal decomposition of coal, brown coal, pitch, oil shale, timber or the like is introduced directly into a separate reaction chamber without condensation, and passed through a catalyst stuffed therein and comprising an adsorptive colloidal substance, such as active charcoal, acidic clay, Florida earth, Fuller's earth, Kieselguhr, and the like preferably formed into granular, cord-like or other suitable shape to pass the gas therethrough, and kept at a temperature of 350° to 800° C., it has been found that the majority of vapours of paraffine, acidic oils and basic oils in tar are decomposed into vapour of a petroleum-like oil of lower molecules, which is stable and contains gasoline and other volatile matters in remarkably increased content. This petroleum-like oil has a specific gravity lower than oils obtainable by the known low temperature distillation process; has least viscosity, contains from about 30% to 40% of gasoline, about 30% to 40% of light oils, about 20% to 40% of heavy oils, and substantially no pitch. It can be easily fractionated by mere distillation. It is found that the yield of this petroleum-like oil may decrease about 10% to 20% of oils yield obtainable by the known low temperature distillation process of the same raw material. It is deemed that this decrease in the yield may due mainly to gaseous conversion and water formation of a part of the oil vapours contained in the gas.

In the accompanying drawings:

Figure 1 is a vertical section through an apparatus suitable for carrying out the process of this invention;

Figure 2 is a section taken along line II—II of Figure 1;

Figure 3 shows in an enlarged scale a detail of a closing means used on the lower end of the distillation tower or of the gasolinating tower; and

Figure 4 is an end view of Figure 3.

Referring to the drawings, a retort 1 is divided by a partition wall 2 into two compartments 3 and 4. In the compartment 3, there is provided a distillating tower or column 5 which is charged with coal, brown coal, pitch, oil shale, timber or the like. In the compartment 4, there is provided a tower 6 which is filled with a catalyst, that is, a gasolinizing agent, such as active carbon, acidic clay, Florida earth, Fuller's earth, Japanese loam, Kieselguhr or the like, which is adapted for gasolinizing the vapour produced by dry distillation, that is, thermal decomposition of said raw material. The towers 5 and 6 are connected at their upper portions by a pipe 7. Each of said towers 5 and 6 is provided with an

independent fire grate, the fire grate **8** being adopted for the tower **5**, and another similar fire grate (not shown) being provided for the tower **6**. **10** and **11** are chimneys.

The gas containing oil vapours produced by dry distillation of the raw material in the tower **5** is introduced into the tower **6** through the pipe **7** and, while descending through the tower **6**, it is chemically reacted by the catalyst acting as gasolinizing agent in said tower, and thus the oil vapours are gasolinated. It is discharged through a discharge pipe **9** provided in the lower part of the tower **6**, and is collected after condensation. The lower end of each of the towers **5** and **6** is closed by means of a closure **12** having a bottom **13**. Said closure **12** is clamped by means of a bar **14** held in place by bolts **15** welded to the lower part of the tower and nuts **16** screwed thereto. Similar closing means is provided at the top of each of the towers. Each tower is provided with a hopper at the top, and at the lower end it is provided with a discharge port for the purpose of replacement of the charge.

An example of a mode of carrying out this invention is as follows:

Employing the apparatus as described with reference to the accompanying drawings, the tower **5** is charged with, say, coal B as raw material, and the tower **6** is filled with Japanese acidic clay as catalyst which is preferably dried by heating at 200° C. Said coal B is first heated at 500° C., and the gas containing low temperature tar vapours produced thereby is directly passed through said catalyst layer which is heated at 500° C., and then it is condensed after taken out of the tower **6**. By such process, a petroleum-like oil has been produced, which has light yellow colour and viscosity equal to that of petroleum, contains about 30% volatile oils, the yield thereof being about 13% of the raw material coal. On the contrary, when said vapour is cooled without being passed through the said catalyst layer, the low temperature tar thus produced is black oily substance which has no fluidity at normal temperature and is melt by heating, and the yield thereof is approximately 15%. Thus, it will be seen that according to this invention a petroleum-like oil can be most readily produced from coal B with a minor loss of about 10% relative to said low temperature tar.

The following table shows the results obtained by charging various sorts of raw materials in the tower **5**; using active charcoal particles and other catalysts in the tower **6**; effecting dry distillation of said raw materials in the tower **5** at temperature of from 500° to 600° C.; and passing the gas containing tar vapours thus produced through the catalyst layer in the tower **6** maintained at temperature of from 400° to 550° C.

| Raw materials | A (North China) | B (Japan) | B (Japan) | C (Japan) | Coaltar pitch | Oil shale (Manchukuo) | Timber Jap. (pine) |
|---|---|---|---|---|---|---|---|
| Catalyst | Active charcoal. | Active charcoal. | Loam | Kieselguhr | Active charcoal. | Active charcoal. | Active charcoal. |
| Yield of oil relative to material coal | 6.3% | 13.0% | 8.9% | 14.0% | 25.0% | 5.0% | 10.5%. |
| Yield of coke relative to material coal | 84.0% | 65.0% | 65.0% | 63.0% | 40.5% | | 23.7%. |
| Constituents of oil (vol.%). Volatile oil 0–220 c | 32.1% | 39.0% | 60.0% | 35.0% | 38.0% | 36.0% | 41.0%. |
| Constituents of oil (vol.%). Light oil 220–300 c | 38.5% | 40.0% | 37.0% | 37.0% | 44.0% | 42.0% | 39.0%. |
| Constituents of oil (vol.%). Heavy oil 300 c | 29.4% | 21.0% | Minimum | 28.0% | 18.0% | 22.0% | 20.0%. |

The analytical results of the above raw materials are as follows:—

| | Volatile matters | Fixed carbon | Ash | Water | Sulphur | Calories |
|---|---|---|---|---|---|---|
| | *Per cent* | *Per cent* | *Per cent* | *Per cent* | *Per cent* | *Kg. cal.* |
| A coal | 13.0 | 81.0 | 4.0 | 2.0 | | 7,500 |
| B coal | 42.8 | 36.2 | 13.4 | 5.6 | 2.5 | 6,500 |
| C coal | 45.2 | 35.8 | 11.2 | 5.8 | 2.0 | 6,600 |
| Coaltar pitch | 54.8 | 40.2 | 0.3 | 1.5 | 3.2 | 8,700 |
| Oil shale (Manchukuo) | 17.6 | 4.1 | 74.8 | 3.5 | 0.7 | 1,320 |
| Timber (pine) | 23.5 | 23.7 | 0.8 | 52.0 | | 4,100 |

According to the process of this invention, the residue of dry distillation of the raw materials can be utilized as coke or low temperature coke, when the same are coal. Preferably the thickness of the catalyst layer applied may be varied according to the characteristics and activity of the catalyst used. The total amount of the permanent gas produced increases as increase of thickness of the catalyst layer and also as the rise of the temperature, resulting to decrease the oil yield however to increase the percentage of the volatile matters in the oil yield. Here, the increasing tendency of total contact of gasoline in the oil yield is shown as the temperature of the heated catalyst is elevated from 350° to 500° C. and then the decreasing tendency is shown from 500° to 800° C., the maximum being at 500° C. or about. When dry distillation of the raw material is effected by external heating, the produced gas may contain a moderate amount of ethane and higher gas, so that a part of the gas may be utilized as a raw gas for synthetically producing a polymer gasoline.

HAJIME ISOBE.

PUBLISHED
MAY 18, 1943.
BY A. P. C.

# H. ISOBE

PROCESS OF MANUFACTURING PETROLEUM-LIKE OIL BY DRY DISTILLATION OF A CARBONACEOUS MATERIAL

Filed April 5, 1939

Serial No. 266,187

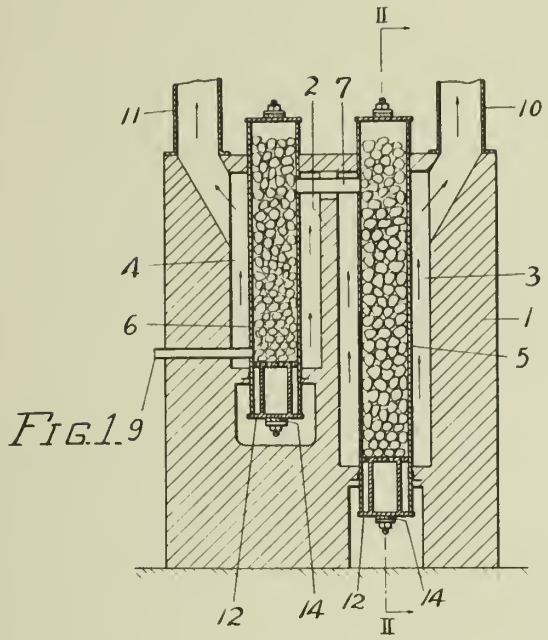


FIG. 1.

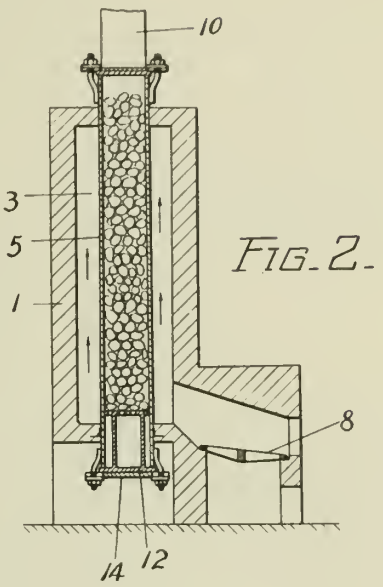


FIG. 2.

FIG. 3.

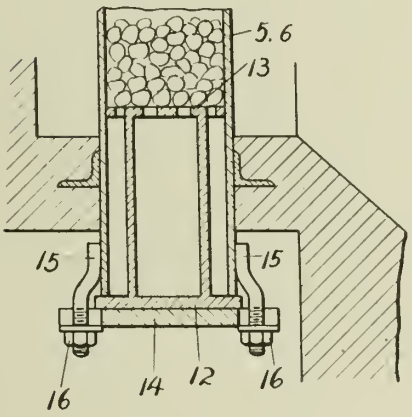


FIG. 4.

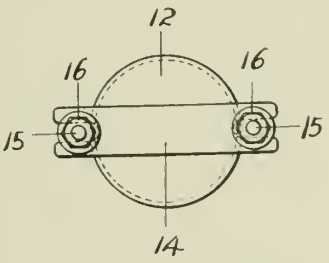


Inventor,
H. Isobe

By: Glascock Downing & Seebold
Attorneys.

Published May 18, 1943 Serial No. 267,167

# ALIEN PROPERTY CUSTODIAN

## YEASTY REMEDY AND METHOD OF PREPARING THE SAME

Kinya Nagao, Tokyo, Japan; vested in the Alien Property Custodian

No Drawing. Application filed April 10, 1939

The present invention relates to a method of preparing an yeasty remedy, which consists in cultivating and propagating yeast of torula family in mash containing a large quantity of pentose or pentosan, the object thereof being to obtain an effective nutritious product cheaply from an almost waste material.

Alcohol yeast, viz. saccharomyces cerevisae contains vitamin $B_1$, nucleic acid and other various kinds of medically and nutritiously effective ingredients, but for its propagation, starch, monosaccharose, disacchorose, etc. must be employed as nutrient mediums. As pentose is unassimilable, pentose or pentosan-containing materials such as straw, rice bran, the core of Indian corn, bamboo sheath, etc. have hitherto been almost neglected as to their use as the principal materials for alcoholic fermentation or the cultivation of yeast and their large quantities have been cast away as useless. Now, according to this invention, by utilizing ingeneously the property of yeast of torula family which ferments not alone monosaccharose, but also even pentose by assimilating them easily and using the above-mentioned almost waste material as a mutrient medium, torula yeast is propagated, thus producing a medically and nutriciously effective yeast material at a very small cost.

The following is an example of performing the present invention:

The core of Indian corn is steamed together with 1% of dilute sulphuric acid solution in an autoclave under a pressure of 50 lbs. per sq. inch for 30 minutes, so that dextrose and a large quantity of pentose may be produced by hydrolysing carbohydrate. Next, the dextrose and pentose solution thus obtained are neutralized with calcium carbonate, and adding 20% of ammonium sulphate and 5% of mono-calcium phosphate yeast nutriments upon the entire sugar content and inoculating pure cultivated special torula yeast thereto, they are held at 15–25° C. and propagated, while blowing air thereto, they are held at 15–25° C. and propagated, while blowing air therein upon completion of the fermentation in about 40 hours, torula yeast is separated by a centrifugal machine and then is dried under reduced pressure. In this way, it is possible to obtain a product consisting of about 53% of dry torula for the sugar contained in the mesh.

The torula yeast utilized in the foregoing example has been found by the inventor and posesses the following important property:

(1) It is aerobic and mostly oval with the major diameter of 2–4$\mu$ (micron) and the minor diameter of 15–2$\mu$ (micron). It rarely has a globular shape with the size 3–4$\mu$ (micron). Its juvenile cell hardly has any oil drop.

(2) It does not form a spore.

(3) When it is cultivated in "Koji" extract, it is propagated and fermented actively. It forms a considerably thick humid ring and film and the cultivated liquor presents an almost transparent condition.

(4) When a giant colony is formed in "Koji" extract gelatin (in 6 days at 27–28° C.), it is slow to grow and assumes a slightly greyish white color. It is flat and substantially round with a radiating border and is hardly wrinkled and is uneven with a ring at the center.

(5) When it is stick-cultivated in "Koji" agar, the colony has a round shape and white lustre with a slightly protruded center and uniform border.

(6) The fermentable sugars are glucose, fractose, mannose, saccharose and raffinose, while the non-fermentable sugars are galactose, maltose, lactose, arabinose and xylose.

(7) Temperature for the growth.

| | ° C. |
|---|---|
| Maximum temperature | 41–42 |
| Minimum temperature | 14 below |
| Optimum temperature | 28–39 |

(8) The most suitable temperature for the formation of a film and ring is 30–38° C.

As compared with the known yeast product like saccharomyces cerevisae, the product of this invention contains considerable quantities of complex compounds of vitamins $B_1$ and $B_2$ and therefore is very effective as a remedy.

When in this invention the straw of rice-plant, rice bran, bamboo sheath, etc. are employed as the materials for the mash, they may be treated according to the above example.

KINYA NAGAO.

Published May 18, 1943 Serial No. 267,206

# ALIEN PROPERTY CUSTODIAN

## PROCESS FOR THE MAKING COMPACT, IMPREGNATING AND/OR DYEING OF OXIDIC PROTECTIVE LAYERS ON MAGNESIUM AND ITS ALLOYS

Gerhard Elssner and Ernst Schröder, Leipzig, Germany; vested in the Alien Property Custodian

No Drawing. Application filed April 10, 1939

Objects of magnesium or magnesium alloys have been protected in various ways against corrosion, e. g. by providing the objects with oxidic protective layers by etching them in bichromate solutions or by anodic treatment in electrolytes.

It is also known subsequently to impregnate the thus obtained surface layers with lacquers, oils, fats and the like or to carry out dyeing of the oxidic protective layer, by dipping into solutions of organic dyestuffs. However it has been found that the protective layers thus obtained have large pores and holes which strongly affect their stability to corrosion and that the dyeings of the oxidic layers are very non uniform.

Series of experiments carried out have shown that it depends principally on the absorptive power of the oxidic whether or not compact coatings or dyeings are obtained on magnesium, but that also certain conditions in the choice of lacquers, dyestuffs and other impregnating agents have to be fulfilled. Systematic testing of the lacquers led to the recognition that pores and holes in the coating layer may often be caused by a subsequent formation of little bubbles, within the layer which can only then with certainty be avoided if the lacquer or the other impregnating agent shows a pH number of above 6 in order to exclude any reaction with the magnesium metal or oxide. Almost all the hitherto used kinds of lacquer in particular those which give good results in the impregnation of aluminium are with regard to this point of view unsuitable for objects of magnesium and its alloys.

The same holds true for solutions of organic dyestuffs. In so far as this pH number lies under 6.0 there occurs with superficially oxidised magnesium almost exclusively no dyeing, or there are produced by the decomposition reactions unsightly colours.

The object of the invention is accordingly a process for the making compact, impregnating and/or dyeing of oxidic protective layers on magnesium and its alloys which overcomes the above mentioned disadvantages by using lacquers, dyestuffs and other impregnating solutions of which the pH value is over 6.0.

GERHARD ELSSNER.
ERNST SCHRÖDER.

Published May 18, 1943 Serial No. 267,207

# ALIEN PROPERTY CUSTODIAN

## PROCESS FOR THE PRODUCTION OF OXIDIC PROTECTIVE LAYERS ON MAGNESIUM OR ITS ALLOYS

Gerhard Elssner and Ernst Schröder, Leipzig, Germany; vested in the Alien Property Custodian

No Drawing. Application filed April 10, 1939

It is known to protect objects of magnesium and its alloys against corrosion by providing the surfaces of the objects with oxidic protective layers by anodic treatment in electrolytes, and subsequently, these impregnating layers, e. g. with lacquers, oils, fats and the like. Also dyeing of these oxidic protective layers has already been carried out. Further it is known to submit the objects to be anodically oxidised to a pretreatment which comprises the generally usual degreasing of the surface and also the removal of oxides and other impurities by etching in acids, usually nitric acid. The surface of the magnesium becomes hereby or remains shining white. In an attempt to increase the absorptive power, and the adhesiveness of the oxidic protective layers for impregnating substances such as lacquers, oils, fats or dyestuffs without thereby affecting the hardness of the oxide layers series of experiments have been carried out which have led to the recognition that the relatively small absorptive power of oxide layers of magnesium which are strong in themselves is caused by a characteristically dense nature of the first formed and thus outermost oxide layer. For this reason it has been attempted to form more favourably the surface of the part to be oxidised, by other than the hitherto usual pretreatment processes. Surprisingly it has been found that a treatment with nearly neutral salt solutions, preferably with ammonium salts, e. g. ammonium chloride, gives a completely different result from the hitherto usual etching with nitric acid of different concentrations. The surface does not remain polished but becomes slightly matt and bright grey without however a loose etching residue occurring on the surface.

The pure salt solutions can also contain small amounts of free alkalies, or acids, however the solutions must be approximately neutral. A solution which may be used for almost all purposes can be composed of 200 g. of ammonium chloride per litre of water. It is used if necessary at slightly raised temperatures for example 30 to 40° C.

For brightening the protective layers according to the invention, a treatment in strong alkali solution is intercalated between the pretreatment with salt solutions and the oxidation.

Preferably the layers are boiled for a rather long time in pure water following upon the anodic oxidation in order to still further improve the brightening.

It appears to be a question of selective solution of single alloy components in the pretreatment with salt solutions according to the invention.

Practically the action in each case is very strong and striking. If for example magnesium parts are etched in nitric acid solution and then anodically oxidised, they assume only a weak colour in the solution of an organic dyestuff.

If however, similar parts are treated in the above named ammonium chloride solution, these parts show saturated, deep and uniform colorations. The coloration gives a measurement of the absorptive power. Other impregnating substances also are correspondingly taken up in a strong degree.

GERHARD ELSSNER.
ERNST SCHRÖDER.

Published May 18, 1943 Serial No. 268,641

# ALIEN PROPERTY CUSTODIAN

## MAGNETIC DEVICE

Albert Patin, Berlin, Germany; vested in the Alien Property Custodian

Application filed April 18, 1939

This invention relates to a magnetic pendulum and refers more particularly to magnetic means operating through an automatically sliding return switch for the purpose of maintaining an element in a certain position.

An object of the present invention is the provision of an automatically operable magnetic pendulum which is comparatively inexpensive in construction, and which may be used for steering and regulating devices of various types.

Other objects of the present invention will become apparent in the course of the following specification.

The objects of the present invention may be realized through the provision of a contact or indicator sliding along a resistance and closing electrical circuits, the currents of which create forces tending to move an element back to its original position. This element may be a coil winding or a soft iron core the movement of which takes place within a magnetic field. One of the characteristic features of the device is that the movement of this element causes the switching of electrical resistances producing currents which create a force tending to move the element back to its original position.

The invention will appear more clearly from the following detailed description when taken in connection with the accompanying drawings showing by way of example preferred embodiments of the inventive idea.

In the drawings:

Figures 1 to 5 are diagrams each of which illustrates a different embodiment of the inventive idea.

The diagram of Figure 1 shows magnets N and S creating a magnetic field which extends between them. A rotary coil 6 is provided within this magnetic field. The end 7 of the coil 6 is connected by a wire 8 to a point 9 located substantially in the middle of a wire 10 which connects two equal resistances 11 and 12. Wires 13 and 14 of equal length connect the resistances 11 and 12 with two ends of a resistance or potentiometer 15. Thus the point 9 constitutes substantially the electric middle of the circuit.

The opposite end 16 of the rotary coil 6 is pivotally connected with a contact or indicator 17 one end of which is adapted to slide over the resistance 15.

The resistance or potentiometer 15 is subjected to the same voltage as the resistances 11 or 12.

In the middle position shown in Figure 1, no electric current will flow through the coil 6. However, if some exterior force exerted upon the indicator 17 would cause it to swing around the pivot 16 and move it, for example, to the position shown by broken lines in Figure 1, then the electric equilibrium will be disturbed, since a larger resistance will exist in the circuit to the right of the indicator 17 than to the left of it (looking in the direction of Figure 1), and then an electric current will flow through the rotary coil 6. The direction of this current depends upon the direction of movement of the indicator 17 from its middle position. The strength of the current is determined by the angle of deviation of the indicator 17 from its middle position and is directly proportional to the extent of this deviation.

The current flowing in the rotary coil 6 will create a magnetic field and, as is well known, this field will produce a force which will act upon the coil 6 and which will tend to move the coil 6 back into its original position.

Therefore, as soon as the exterior force acting upon the indicator 17 has disappeared, the magnetic force will return the coil 6 into its original position.

Any suitable means not shown in the drawing may be used to couple the swinging movements of the indicator 17 and of the coil 6.

The diagram shown in Figure 2 illustrates a core 20 consisting of soft iron and rotatably mounted upon a central pivot 21. Electro-magnets 22 and 23 are situated on opposite sides of the core 20 so that this core is located within the magnetic field provided by these magnets. A lever 24 is firmly connected with the core 20 and is carried thereby. The lever 24 extends at right angles to the direction of the core 20.

The winding 25 of the magnet 22 is connected by a wire 26 with a pointer or contact 27 which is carried by one end of the lever 24. The winding 28 of the magnet 23 is connected by the wire 29 with a contact or pointer 30 which is carried by the opposite end of the lever 24. The two magnetic windings 25 and 28 are connected with each other by the wire 31.

The contact or pointer 27 is adapted to slide over a resistance or potentiometer 32 while the pointer 30 slides over a similar resistance 33. Wires 34 and 35 interconnect the resistances 32 and 33. The middle points 36 and 37 of the wires 34 and 35, respectively, are connected to the plus and minus terminals of a source of electric energy not shown in the drawings. Thus the resistances 32 and 33 and the pointers 27 and 30 are subjected to the same voltage.

In the middle position shown in Figure 2 the pointers 27 and 30 are subjected to the same po-

tentials, so that no current will flow through the windings 25 and 28 of the electro-magnets 22 and 23 and no magnetic force will be exerted upon the core 20.

If, however, any exterior force disturbs this equilibrium and causes the core 20 to swing from the position shown in Figure 2, then the pointers 27 and 30 which move along with the core 20 will not be subjected to the same potential any more, so that an electric current will flow through the pointer 27, the wire 26, the winding 25, the wire 31, the winding 28, the wire 29, and the pointer 30. The direction and extent of this current depend upon the direction in which the core 20 was swung and the extent of its movement. The electric current flowing through the windings 25 and 28 will energize the electro-magnets 22 and 23 so that a magnetic field will be established between these magnets. This magnetic field will create a turning moment exerted upon the core 20 and tending to move it back to its original position shown in Figure 2.

The device shown in Figure 3 comprises a winding 40 which is partly enclosed by a larger winding 41. The ends of winding 41 are connected by the wires 42 and 43 to the plus and minus terminals 44 and 45 of a source of electrical energy, to that a constant magnetic field is created by the winding 41. The winding 41 may be made immovable, while the winding 40 may be so arranged that it can easily move in relation to the winding 41. Since the winding 41 is subjected to a constant voltage the winding 40 will occupy a predetermined position in relation to the winding 41 when the equilibrium of the device is not disturbed.

One end of the winding 40 is connected by a wire 46 to a pointer 47 which slides over a resistance 48 the two ends of which are connected to the terminals 44 and 45. The opposite end of the winding 40 is connected by a wire 49 with a pointer 50 which slides over a resistance 51. The two terminals 52 and 53 of the resistance 51 should be subjected to the same voltage as that to which the terminals 44 and 45 are suggested.

In actual practice the terminal 52 may be connected to the terminal 44 and the terminal 53 may be connected to the terminal 45, thus eliminating the necessity of using two separate equal sources of energy.

In the position shown in Figure 3 the device is shown in a state of equilibrium. When an external force is exerted upon the movable winding 40, this winding will move in relation to the winding 41 and the pointers 47 and 50 will move along with the winding 40. Then an electrical current will flow through the pointer 47, the wire 46, the winding 40, the wire 49 and the pointer 50, and this current will create a magnetic field the strength of which will be proportional to the extent of movement of the winding 40. The magnetic field created by the winding 40 will develop forces which will tend to move the winding 40 back to its original neutral position.

The diagram of Figure 4 illustrates the application of the described principle to an automatically steered rotary coil relay used, for instance, on ships to maintain a ship on a predetermined set course. The device comprises a rotary coil 60 which is situated between the magnets N and S. One end 61 of the coil 60 is connected by wire 62 to a point 63 situated in the middle between two equal resistances 64 and 65.

The opposite end 66 of the rotary coil 60 is pivotally connected with one end of a contact or pointer 67 which slides over a resistance 68. The resistance 68 constitutes the potentiometer of the relay. Wires 69 and 70 connect the resistance 68 with the resistances 64 and 65. The contact points 71 and 72 upon the wires 69 and 70, respectively, are used for the withdrawal of the secondary current. If the device is used on a ship for steering purposes, then the contacts 71 and 72 may be connected directly or indirectly to a circuit (not shown) which includes the motor operating the rudder of the ship.

A rotary coil 73 is situated below the coil 60 and is used for balancing the system. The end 74 of the coil 73 is connected at 75 to the middle of a resistance 76. The opposite end 77 of the coil 73 is connected by the wire 78 to a contact or pointer 80 which is sliding over the resistance 76. The two ends of the resistance 76 are connected to a source of electrical energy.

The pointer 80 is connected by any suitable means not shown in the drawings with a gyro 81 in a vertical frame 82.

In the illustrated position the ship is steered along its proper set course. As soon as the ship deviates from its course, the device 81 will be actuated and then the frame 82 will cause the pointer 80 to move out of its neutral position. As soon as the pointer 80 is moved, the electrical equilibrium will be disturbed and a current will flow through the pointer 80, the wire 78, the coil 73, and the wire 79. The electrical current flowing through the wire 73 will create a magnetic field which will affect the coil 60 and will move this coil out of its neutral position. The movement of the coil 60 will cause a movement of the pointer 67 connected with the coil 60 with the result that an electrical current will flow through the resistance 68 and the wires 69 and 70. As already mentioned, the terminals 71 and 72 of the wires 69 and 70 are connected to a rudder steering device and the current flowing therethrough tends to move the rudder in such manner as to cause the system to return to its original equilibrium. The rudder operated by the steering device will return the ship to its original course and then the frame 82 will return the pointer 80 to its neutral position, and the rotary coils 60 and 73 will also move back to their positions shown in Figure 4.

It should be noted that the impulse which is transmitted to the rudder motor through the terminals 71 and 72 is directly proportional to the deviation of the ship, as indicated by the device 81, since the reaction of the pendulum device is proportional to the original deviation.

The device shown in Figure 5 illustrates the application of the subject-matter of the present invention to a differential connection. The device includes magnets N and S and a rotary coil 90 which is situated in the field of these magnets. The middle point 91 of the rotary coil 90 is connected by a wire 92 with a battery 93. A contact or pointer 94 is also connected with the battery 93, and is slideable over a resistance of potentiometer 95. The pointer 94 is operatively connected with the coil 90 by any suitable means not shown in the drawing. One end 96 of the rotary coil 90 is connected by a wire 97 with one end of the resistance 95. The opposite end 98 of the coil 90 is connected by the wire 99 with the other end of the resistance 95.

In the middle position of the coil 90 the pointer 94 is situated in the middle of the resistance 95 so that equal resistances are situated on both sides of the pointer 94. Therefore, if all other

resistances are the same the currents flowing through the two halves of the coil **90** are equal to each other and since they flow in opposite directions, the turning moments created by them are equal and opposed to each other, so that no outer force is exerted upon the coil **90** in the illustrated position; therefore, the coil **90** will normally remain in that position.

If, however, some exterior force resulting, for instance, from the deviation of a ship (as described in connection with Figure 4) causes the coil **90** to move from its neutral position, then the pointer **94** will also be moved from its middle position so that different resistances will be now situated on both sides of the pointer **94**. Then the currents flowing through the two halves of the coil **90** will be different and the turning moment created by one current will be greater than the turning moment created by the other current. The resulting turning moment will actuate the coil **90** and will tend to move it back into its original position.

It is apparent that the specific illustrations shown above have been given by way of illustration and not by way of limitation and that the structures above described are subject to wide variation and modification without departing from the scope and intent of the invention. For example, it is immaterial for the purposes of the present invention whether the deviation of the rotary coil is created mechanically, electrically or by any other suitable means. The pointer need not be situated originally in its neutral zero position, although this is a preferred form of construction.

Whenever the magnetic pendulum is applied to steering devices, it is necessary that the angle of deviation of the rotary coil be made dependent upon the extent of the forces causing the deviation. irrespective as to whether the forces are created intentionally or unintentionally. The invention is particularly applicable to steering devices of the type wherein each deviation from a set course results automatically in a corrective operation.

However devices of the described type are not limited in application to steering devices, but may be used everywhere wherein it is necessary to influence a physical quantity, and wherein the movement of an indicator withdrawing electrical currents from a circuit should create forces influencing or causing the rotation of a movable magnet carrying the indicator.

In fact, the returning forces may be utilized for performing any type of useful work.

Obviously, the return movement of the pendulum need not be a linear function of the original deviation but may have any other functional relationship therewith.

The subject matter of the present invention is also successfully applicable to relays wherein the secondary current is caused to flow through elements, the resistances of which vary as a result of minute movements of these elements depending upon the pressure exerted thereon, such as carbon pressure columns. These columns have the advantage that they may be conveniently used to switch on stronger currents without steps, but they have the drawback that their neutral zero position can never be definitely determined. This drawback may be eliminated by the present invention in that the pointer **94** of the construction shown in Figure 5 may be utilized for maintaining the columns at such pressure that their resistances remain equal. The subject matter of the present invention may be also successfully utilized with other elements which react to pressure, for example, piezo-crystals, cupreous oxide rectifiers, and the like.

All of the above and other modifications and variations are to be included within the scope of the present invention.

ALBERT PATIN.

PUBLISHED
MAY 18, 1943.
BY A. P. C.

A. PATIN

MAGNETIC DEVICE

Filed April 18, 1939

Serial No.
268,641

2 Sheets-Sheet 1

Fig. 1.

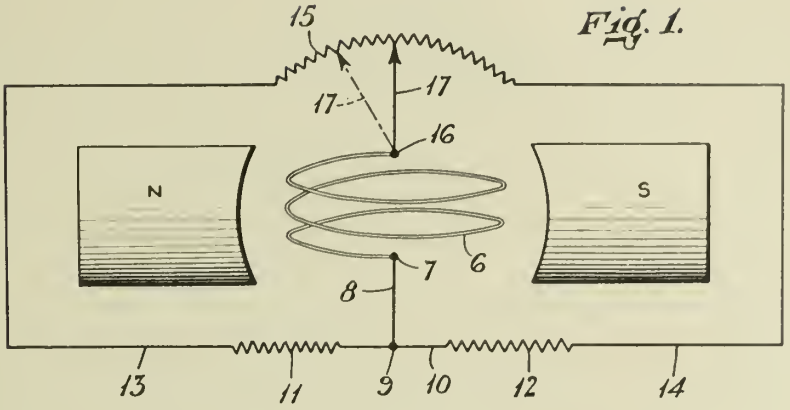


Fig. 2.

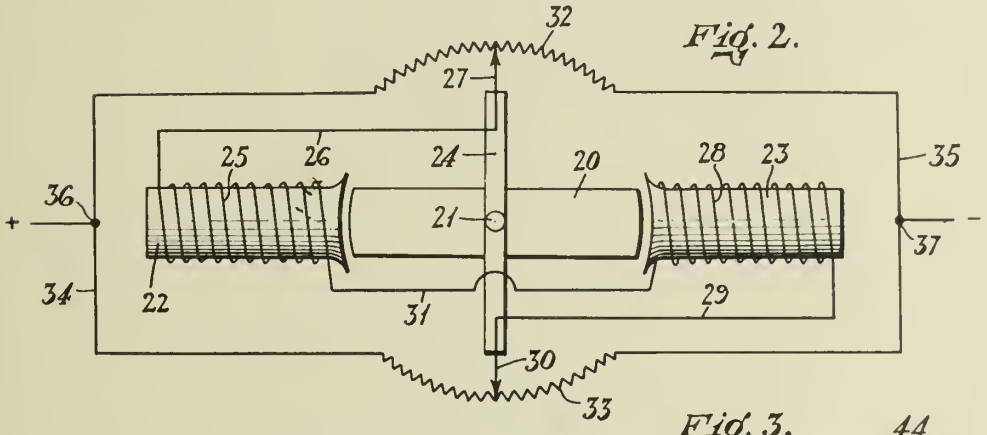


Fig. 3.

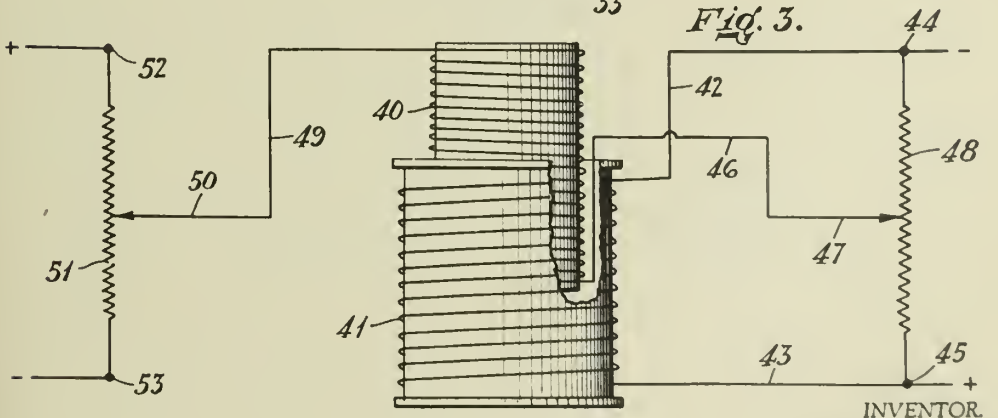


INVENTOR.
ALBERT PATIN

Richards & Geier
ATTORNEYS

PUBLISHED
MAY 18, 1943.
BY A. P. C.

A. PATIN

MAGNETIC DEVICE

Filed April 18, 1939

Serial No.
268,641
2 Sheets-Sheet 2

Fig. 4.

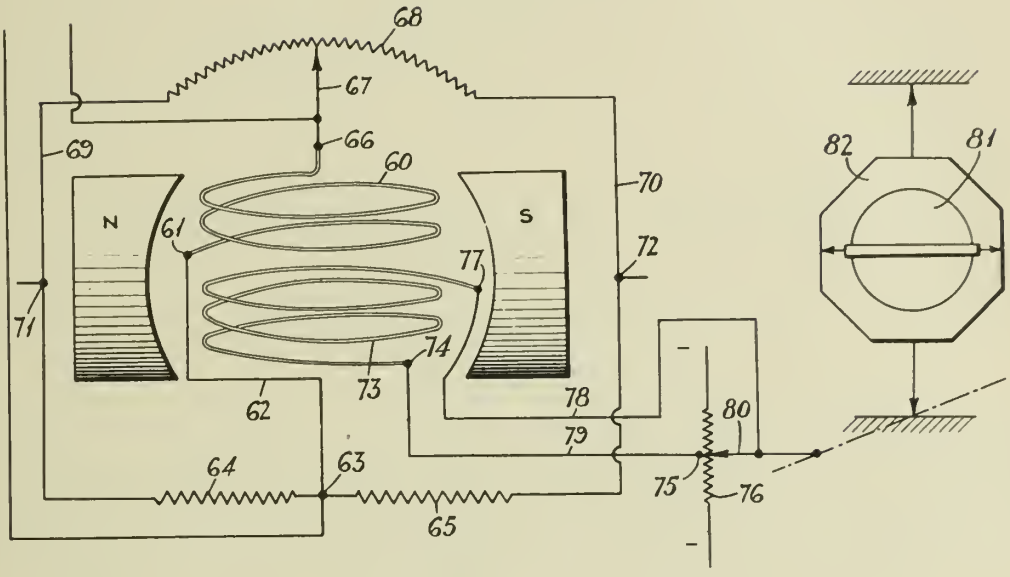


Fig. 5.

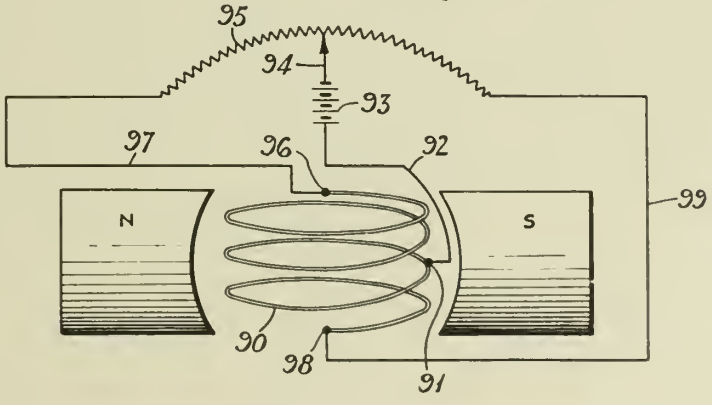


INVENTOR.
ALBERT PATIN

BY

Richards & Geier
ATTORNEYS

Published May 18, 1943 Serial No. 269,478

# ALIEN PROPERTY CUSTODIAN

## CABLE JOINT

Hans Jacobs, Cologne-Nippes, Germany; vested in the Alien Property Custodian

Application filed April 22, 1939

The subject of this invention is a joint for cable jacketed with artificial material. In accordance with the invention, the joint casing consists of a tube of artificial material which is pushed over the cable jacket, the heated ends of which tube are fused or coalesced with the ends of the cable jacket by means of a coating of acetone or other adhesive means. The fused places are smeared with compound, and are covered up by layers of rubber and insulating tape, or the like. The joints of the cable conductor wires, which may be formed as soldered places, desirably are offset or staggered relatively to one another. The wire joints may be coated with lacquer, and over the soldering proper they are provided on either side with alternate layers of polyvinylchloride in the form of foil and liquid polyisobutyls or similar insulating substances. An insulation of this type is moreover applied over the entire set of conductor wires.

In the example of carrying out the invention illustrated in the drawing the conductor wires *a*, of the cable *c* that is provided with jacket *b* made of an artificial material, are connected together by soldering. The soldered places *d* are offset or staggered relatively to one another. The soldered places may be coated with insulating lacquer, and are provided, extending to either side and alternately, with, for example, five layers each of foil made from polyvinyl chloride and liquid polyisobutyls. The entire set of conductor wires is in addition surrounded by three layers apiece of this kind. The tube *c* of artificial material serves as a joint casing, and prior to the connecting of the cable conductor wires *a* it is disposed over one of the two cables *c*, and after the connections have been made it is pushed over the connection places. The ends *f* of the tube *e* of artificial material are, by coating with acetone or a similar adhesive means, fused or coalesced with the heated ends of the cable casings *b*. The fused places are smeared with a compound mass *g*, and are each covered with a layer *h* of rubber and insulating tape.

HANS JACOBS.

PUBLISHED
MAY 18, 1943.
BY A. P. C.

H. JACOBS
CABLE JOINT
Filed April 22, 1939

Serial No.
269,478

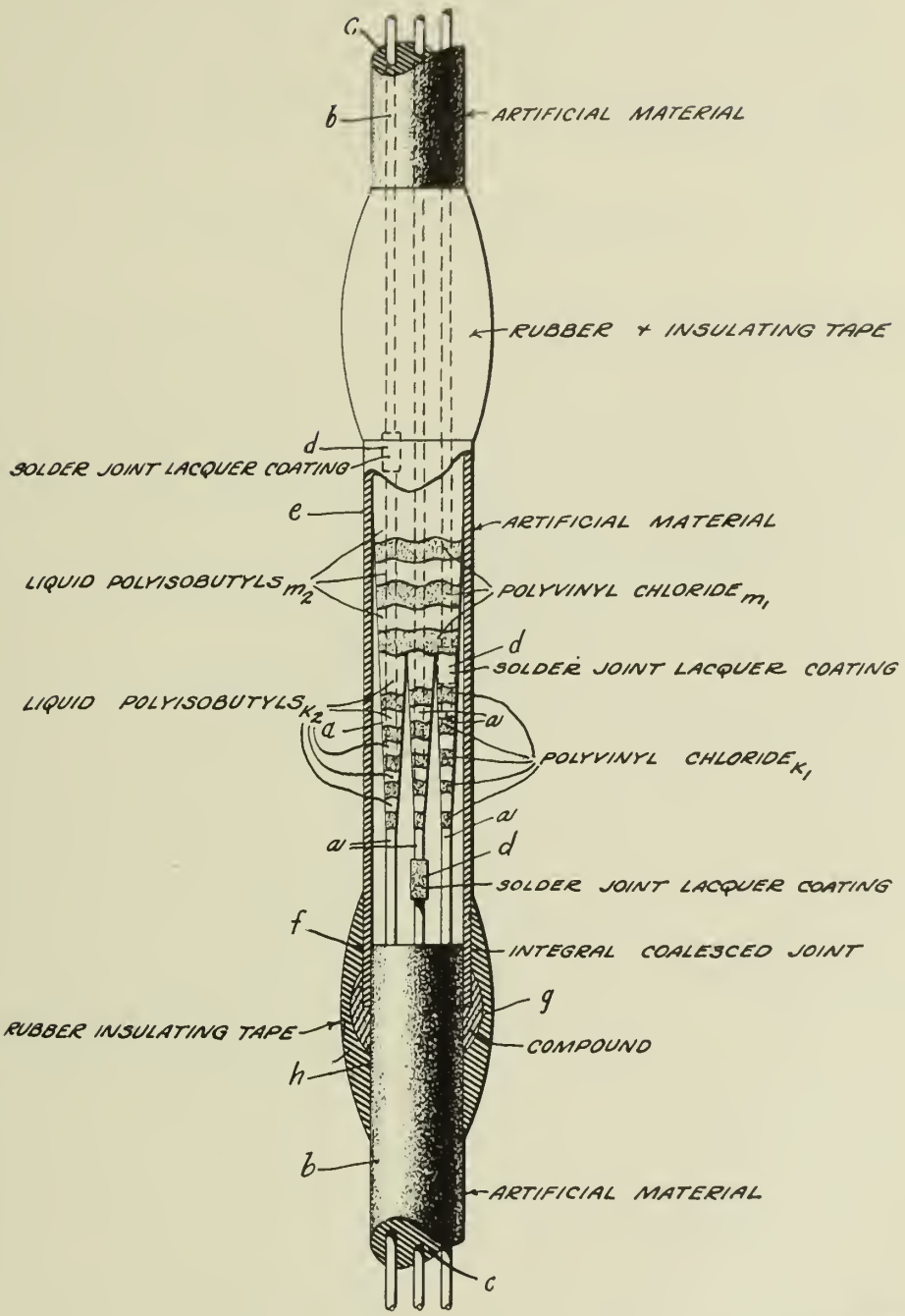


INVENTOR
Hans Jacobs
BY
George J. Schotter
ATTORNEY

Published May 18, 1943 Serial No. 275,250

# ALIEN PROPERTY CUSTODIAN

## ELECTRIC CABLE

Johannes Deppe, Berlin-Niederschonhausen, Germany; vested in the Alien Property Custodian

Application filed May 23, 1939

The invention relates to electric cables with laminated insulation impregnated with a liquid insulating medium. It has for its object to overcome certain disadvantages which are associated with the known impregnating agents.

It is known that the electrical strength of the cable insulation is determined by the electrical properties of the impregnating material as well as by its behaviour on alterations in the temperature of the cable. Apart from the electrical properties the coefficient of expansion and the variation of the viscosity with the temperature are vital factors in the effect of the material employed for impregnating the cable. If the coefficient of expansion is large, then a comparatively large part of the impregnating material emerges from the laminated insulation when the cable is heated, so that when the cable subsequently cools the interstices are no longer completely filled by the impregnating material. Cavities arise in the cable which cause ionisation phenomena, which in turn result in a rapid ageing of the impregnating material. If, in addition, the viscosity of the material varies considerably with the temperature, i. e. if it increases rapidly with increasing temperature of the cable, then this greatly facilitates the so-called draining of the cable, with the resultant formation of cavities.

The usual material for impregnating cables consists of oil, to which resins are added for the purpose of increasing the viscosity. The necessary admixture of resins causes a deterioration in the electrical properties and promotes the ageing of the material. Moreover the known impregnating material has a large coefficient of expansion and its viscosity varies considerably with the temperature, so that when this impregnating material is employed there is a comparatively rapid ageing of the material and thus the cable has a short life.

According to the invention the laminated insulation of the cable is impregnated with suitable polymerised vinyl derivatives, more particularly polymerised isobutylene. Polymerised isobutylene has excellent electrical properties, a small coefficient of expansion and the viscosity alters very little within the range of temperature which is met in practice in cables. In addition, by appropriate polymerisation any desired viscosity of the impregnating material can be obtained.

For the impregnation of ordinary cables, a polymerised highly viscous vinyl derivative is preferably employed in order to impede draining of the cable. In view of the impregnating operation the viscosity of the impregnating medium may in general not exceed certain limits, so that the viscosity of the impregnating material must be smaller than is desirable with reference to the subsequent use of the cable. When employing polymerised vinyl derivatives, this difficulty can be avoided by first impregnating insulation with a polymerised vinyl derivative of smaller viscosity and subsequently subjecting the cable to a treatment whereby a higher degree of polymerisation and thus a higher viscosity of the impregnating material is obtained. This can be effected by a heat treatment, which suitably is carried out in the cable impregnating tank.

When employing polymerised vinyl derivatives it is particularly advantageous if instead of using the customary paper the laminated insulation consists of glass products, such for example as glass threads, glass fabric, glass wool, glass wool roving or a combination of a number of these glass products. The use of these glass products has the advantage that they are to a large extent insensitive to temperature. This property however could hitherto be utilised only in part for cables, as the temperature sensitivity of the known impregnating materials did not permit of an appreciable increase in cable temperatures. Polymerised vinyl derivatives and particularly polymerised isobutylene permit higher temperatures so that a cable insulated with glass products and impregnated with polymerised isobutylene can be subjected to appreciably higher temperatures than the known cables.

The use of polymerised vinyl derivatives is also of great advantage in cables which are constructed in the manner of the oil cable, i. e. in cables which in the interior of the cable are provided with channels which are filled with the impregnating material and communicate both with the insulation and with expansion vessels serving to receive the impregnating material.

Whereas in the ordinary cables previously discussed it is advantageous to use a highly viscous polymerised vinyl derivative, it is possible in the case of a cable constructed in the manner of an oil cable to utilise a less viscous polymerised vinyl derivative. The advantages of the new impregnating material in such cables reside in that due to the small coefficient of expansion the cross section of the channels in the cable and the volume of the expansion vessels can be appreciably smaller than hitherto.

The use of glass products, such as glass bands, impregnated with polymerised vinyl derivatives is also of advantage in conjunction with solid vinyl derivatives, e. g. solid isobutylene. Solid

vinyl derivatives, e. g. solid isobutylene, have very small dielectric losses so that their use is appropriate where a high efficiency insulation is necessary, e. g. leads or cables for television purposes. Solid isobutylene has however the disadvantage that it has a low mechanical strength and in addition it is thermoplastic. These disadvantages can be overcome by the use of sleeves or sleeves and spacers consisting of glass products impregnated with polymerised vinyl derivatives.

Two embodiments are shown in the accompanying drawing:

In Fig. 1 the electric conductor **1** is surrounded by a number of layers **2** of solid isobutylene. Disposed between the layers is an insertion **3** of glass threads, glass fabric or the like impregnated with isobutylene. The outermost layer **2** is surrounded by a sleeve **4** which is constructed in the same way as the insertion **3**.

In the embodiment of Fig. 2 the insulation **2** again consists of a solid vinyl derivative. It is surrounded by a sheath **5**. This consists of glass fabric impregnated with isobutylene.

JOHANNES DEPPE.

PUBLISHED
MAY 18, 1943.
BY A. P. C.

J. DEPPE
ELECTRIC CABLE
Filed May 23, 1939

Serial No.
275,250

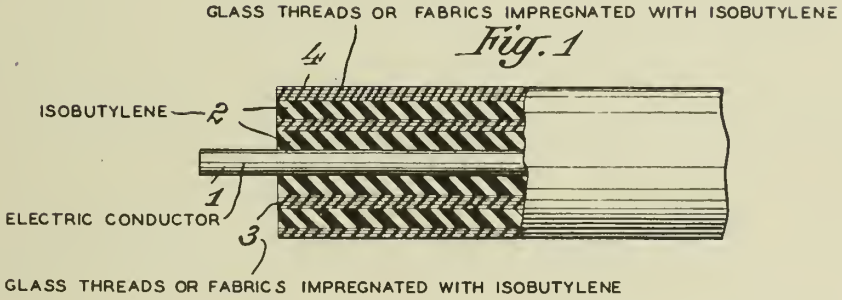


Fig. 1

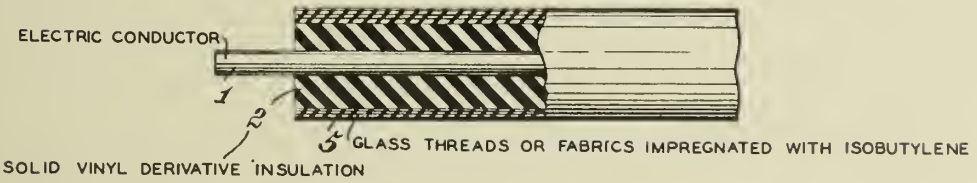


Fig. 2

Inventor:
Johannes Deppe
By
Young, Emery & Thompson
Attorneys

Published May 18, 1943 Serial No. 276,464

# ALIEN PROPERTY CUSTODIAN

## POWER OPERATED CLUTCH MECHANISM FOR MOTOR VEHICLES

Karl Maybach, Friedrichshafen, Bodensee, Germany; vested in the Alien Property Custodian

Application filed May 29, 1939

This invention relates to power operating mechanism for the clutch in motor vehicles, and is particularly concerned with a control arrangement for the clutch actuating mechanism adapted to provide improved operation of the clutch.

One object of the invention is to provide a power actuating means for the clutch which may be controlled by the driver of the motor vehicle with a relatively great degree of precision. A further and more important object of the invention is to provide such a mechanism which will operate in proper timed relation to the shifting of gears in a variable speed gear transmission so that the vehicle clutch will not be reengaged until after a gear shifting operation in the transmission has been completed.

It has been proposed to provide power operated gear shifting devices for changing to different gear selections in the transmission through selectively engaging and disengaging clutches in the transmission which throw into and out of operation different sets of gears. To expedite completion of a gear shifting operation control devices have been provided for accelerating the speed of slower rotating parts of the transmission which are to be brought into engagement with faster rotating parts so that the transmission clutches may be brought quickly to a condition of engagement.

Where a servo motor mechanism is employed for engaging and disengaging the vehicle clutch in addition to gear shifting mechanisms and auxiliary devices such as just referred to, it quite often happens that the manipulation of the clutch servo mechanism under control of the driver to reengage the clutch does not take place at the right moment in relation to the gear shifting operation. Usually the clutch is reengaged too late, although sometimes reengagement occurs before the gear shifting operation is complete. Particular difficulty is encountered in obtaining operation of the clutch at the proper moment in vehicles equipped with variable speed transmissions in which a plurality of pairs of gears must be shifted to produce a particular speed.

With a view of overcoming this problem it has heretofore been suggested that the vehicle clutch during the gear shifting operation be made subject to control of an auxiliary device for accelerating the shifting of gears in the transmission. Such arrangement, however, necessitates a relatively complicated control mechanism which is likely to disengage the clutch too late, and which, furthermore, prevents the power operating mechanism for the clutch from being manually controlled in accordance with the judgment of the driver.

The present invention is calculated to overcome the disadvantages of the prior proposal just referred to by providing a control arrangement for the clutch operating motor, which on the one hand is subject to control by the driver, and which on the other hand is made dependent upon the operating position of the parts in the gear transmission, so that engagement of the clutch is prevented until after a gear shifting operation is completed. The control arrangement carrying out the principles of the invention may be made relatively simple in construction.

Ordinarily servo motor mechanism for operating the clutch is actuated by fluid pressure, either positive pressure or a partial vacuum, and pressure is ordinarily also employed for the gear shifting mechanism and auxiliary devices incident thereto. Sometimes, however, electrically and mechanically operated devices are employed for these purposes. The principles of the control mechanism for the clutch of the present invention may be employed regardless of the source of power.

In the accompanying drawings I have illustrated several embodiments of the invention wherein the vehicle clutch is operated by a fluid pressure motor.

In such drawings:

Fig. 1 is a schematic view of a clutch operating mechanism and control arrangement therefore shown in elevation, the vehicle clutch being shown on a smaller scale; and,

Fig. 2 shows a modified form of control mechanism differing in certain details from Fig. 1, and further showing the auxiliary mechanism associated with the gear transmission through which operation of the clutch mechanism is made dependent upon a gear shifting operation.

Referring first to the embodiment of Fig. 1, the vehicle motor is indicated at 1, and the vehicle clutch at 2. As conventionally the clutch will be normally maintained in engaged condition by clutch springs (not shown). Disengagement of the clutch is effected by lever 3 pivoted on shaft 4 and actuated by lever arm 5. Arm 5 is articulated to rod 6 which extends into casing 14 wherein is housed a fluid pressure clutch actuating motor subject to control of the vehicle driver through foot pedal 10 and mechanism hereafter to be described. Pedal 10 is shown as being in its rest position against stop 27 by spring

28, corresponding to engaged position of the clutch 2.

The clutch motor here comprises piston 7 at the left end of rod 6 slidable in chamber 23 in the casing. A shaft 15 driven by the vehicle motor extends into the casing and operates through cam 16 in coaction with spring 19 to reciprocate a pump piston 17 in chamber 18. Upon upward stroke of the piston operating fluid, such as oil, from the main reservoir in the casing is drawn inwardly past valve 20, as such valve is moved from its closed left position to its open right position, into the chamber 18. On downward movement of pump piston 17 valve 20 moves to its left closed position and the compressed fluid from chamber 18 forces valve 21 to move from its upper closed position to its lower open position and discharge the fluid from chamber 18 into chamber 22.

To prevent the pressure developed by the pump from urging piston 7 to the left and disengaging the clutch except at appropriate times a bore 24 is provided through which fluid from chamber 22 is conducted back to the main fluid reservoir in the casing. At the right end of bore 24 is a valve 25 loaded by spring 26. Movement of foot pedal 10 to the right to its depressed position operates through lever 12 and rod 13 to compress spring 26, thereby to increase the load on valve 25 and close bore 24 to the discharge of fluid. In the retracted position of pedal 10 as shown spring 26 only lightly loads valve 25 so that fluid may readily pass the valve without developing sufficient pressure to act on piston 7. It will be obvious that by manipulating pedal 10 and thereby varying the tension of spring 26 valve 25 may be caused to remain closed, so that full pressure is brought up in chamber 22 and caused to quickly and completely disengage the clutch through movement of piston 7 to the left, or valve 25 may be partially loaded so that only a portion of the fluid escapes past the valve and partial pressure is built up in chamber 22 to act on piston 7 with the result that the clutch is actuated more slowly or brought to a position of partial engagement or disengagement when the pedal 10 is in an intermediate position, or finally, when pedal 10 is in its retracted position valve 25 will be readily opened by the fluid without any fluid pressure being built up in chamber 22 to act on piston 7 with the result that the clutch will be uneffected.

As heretofore stated it is an important feature of the invention that after the clutch has been disengaged reenegagement thereof be prevented until the shifting of gears in the transmission is completed, even though the driver brings pedal 10 to its retracted position. In the present embodiment of the invention this object is obtained by interposing a valve mechanism between chamber 22 and valve 25 adapted to prevent the discharge of fluid through bore 24 even though pedal 10 is retracted so as to otherwise permit opening of valve 25. A chamber 35 is provided crosswise of bore 24. Extending lengthwise of chamber 35 is a rod 32 on which are disposed spaced pistons 33 and 34. In the lower position of rod 32 shown in Fig. 1 bore 24 is open to permit the flow of fluid to valve 25. When rod 32 is raised piston 34 cuts off bore 24 so that fluid pressure will build up in chamber 22 and act on piston 7 regardless of what load is exerted on valve 25 by pedal 10.

Rod 32 is arranged to be controlled by the position of parts in the gear shifting mechanism through piston 31 operating in cylinder 30. The lower side of cylinder 30 is vented through bore 38. The upper side of the chamber is supplied with partial vacuum through a line 37 under control of the transmission until a gear shift is completed. When the latter occurs the vacuum is released, piston 31 and rod 32 move downwardly and bore 24 is uncovered so that fluid pressure previously acting on piston 7 is released by discharge past valve 25. The auxiliary mechanism associated with the transmission by which operation of piston 31 is controlled through line 37 is disclosed in the embodiment of Fig. 2 and will be explained in connection therewith.

The arrangement so far described insures that the clutch will not be reengaged after a gear shifting operation is completed. To prevent shifting of gears until the clutch has been disengaged further means may be provided by which operation of the gear shifting mechanism is subject to control of clutch control pedal 10. Line 40 represents the pressure supply line to a power operated gear shifting mechanism (not shown) of the vacuum type, arbitrarily indicated as being supplied with vacuum from the vehicle engine. Interposed in supply line 40 is a valve box 41 controlled by valve rod 42. When pedal 10 is in its retracted position, corresponding to engaged clutch, line 40 is closed to prevent operation of the gear shifting mechanism. When pedal 10 is depressed fully so as to close valve 25 and effect disengagement of the clutch through movement of piston 7 to the left under the pressure supplied by pump 17, valve rod 42 is depressed to open line 40 and thereby initiate operation of the gear shifting mechanism.

In the embodiment of Fig. 2 the majority of parts of the control mechanism of the clutch are the same as in Fig. 1 and bear corresponding identifying numerals. In the present case, however, the piston actuated valve mechanism interposed in bore 24 is omitted, and reengagement of the clutch in dependency on the gear shift-mechanism is obtained through a simplified mechanism acting on valve 25 through rod 13, which is the same rod through which under actuation of pedal 10 the driver manually controls the clutch motor. As shown, cylinder 30 is located exteriorly of casing 14, instead of interiorly thereof as in Fig. 1, and piston 31 therein through its rod 32 acts against the right end of rod 13 to tension spring 26 and hold valve 25 closed when vacuum is supplied through line 37 to piston 31 to the left.

A fragmentary portion of the gear transmission 45 is indicated comprising pairs of gears 46, 47 and 48, 49. Gear 48 is represented as a freely rotating gear adapted to be brought into driving relation with the transmission shaft from the vehicle clutch through a slidable jaw clutch half 51 which in its left end position engages clutch half 52 and locks gear 48 to shaft 50. Associated with the transmission 45 is a cylinder 53 in which is a rod 55 connecting with clutch half 51 through lever 54. A vacuum line 59 supplied from the intake manifold of the engine connects with cylinder 53, as does line 37, heretofore referred to, leading to control cylinder 30. Spaced piston valves 56 and 57 are mounted on rod 55, and in the position shown, when clutch parts 51 and 52 are disengaged vacuum supply line 59 is closed by piston valve 56 and line 37 is vented to the

atmosphere through port 60 by reason of the space 58 between pistons 56 and 57.

In Fig. 2 the manually controlled pedal 10 is in its retracted position so that the clutch is engaged and the engine 1 is driven through gears 46 and 47 of the transmission. Rod 13 is in its right end position so that spring 26 allows valve 25 to open. Fluid from chamber 22 passes out through bore 24 and piston 7 remains in its right end position. Gear shift clutch 51 is in its right end position so that vacuum supply from line 59 is cut off by piston valve 56 from line 37. Line 37 and cylinder 30 are vented to the atmosphere through port 60.

When the driver moves pedal 10 to the right lever arm 12 and rod 13 move to the left to close valve 25 and piston 7 is forced to the left to disengage clutch 2. Depression of pedal 10 also opens valve box 41 so that vacuum supplied to the gear shifting mechanism passes through line 40. Clutch 51 in the transmission is thereupon urged to the left into preliminary engagement with clutch 52. At this time lever 54 moves rod 55 towards the left to an intermediate position in which piston valve 56 uncovers line 59 and piston valve 57 closes vent 60. Partial vacuum then passes from line 59 through line 37 into the left end of cylinder 30 so that piston 31 holds rod 13 in its left position to maintain valve 25 closed. At such time the manually controlled pedal 10 is rendered temporarily inoperative so that even though the driver releases the same piston 7 will remain in its left end position and vehicle clutch 2 held disengaged.

As the teeth of clutch 50 come into full engagement with those of clutch 52 to connect gear 48 with shaft 50 and complete the shifting operation lever 54 moves rod 55 to its extreme left position so that piston valve 57 moves to the left to position intermediate lines 59 and 37. The supply of partial vacuum is thereby cut off and line 37 and cylinder 30 are vented to the atmosphere so that piston 31 is no longer effective to hold valve 25 in its closed position. Manual control of the clutch is thereby restored, and movement of pedal 10 to its retracted left position will allow rod 13 to move to the right under expansion of spring 26. Valve 25 is permitted to open so that pressure no longer acts on piston 7. The usual springs in vehicle clutch 2 thereupon move the clutch to the left to its fully engaged position and draw piston 7 to its right end position. Release of the pedal 10 also causes valve box 41 to close supply line 40 of the gear shifting mechanism.

With further reference to Fig. 2 it will be evident that shift clutch 51 when in the disengaged position shown is driven from the engine by shaft 50 at a faster rate of rotation than clutch jaw 52 due to the step down gear ratio through gears 46, 47, 49, 48. During the shift, as already described, clutch 51 moves to the left into preliminary engagement with clutch 52, but the teeth of the two clutches will rattle past each other and fail to come into complete engagement until the clutch parts have attained substantially the same speed of rotation. To accelerate the completion of the shift it may be desirable to provide mechanism, known per se, in the form of a brake to slow down clutch 51. Such a brake is diagrammatically illustrated in the lower right hand corner of Fig. 2, for purposes of clarity, but it will be understood that such brake will act on shaft 50 at a point intermediate clutch 2 and the pair of gears 46, 47. The shift accelerating brake is indicated at 62 and has an actuating cylinder 63. Such cylinder may be supplied with partial vacuum through a branch 64 of line 37 so as to become operative under control of valve pistons 56, 57 intermediate the shifting operation. As soon as the brake has slowed down clutch 51 the latter will come into complete engagement with clutch 52, thereby rendering inoperative the brake mechansim as line 37 is vented to the atmosphere. With the arrangement just described it will be evident that the length of the shifting period, and the time in which pistons 56 and 57 move from their intermediate to their left end positions will be determined by the accelerating device 63. Consequently, the period during which piston 31 operates through valve 25 and piston 7 to hold the clutch disengaged and maintain the manual control pedal 10 inoperative is similarly dependent on operation of the brake mechanism.

It will be evident that with the invention engagement and disengagement of the clutch through its operating motor will at all times be subject to control by the driver except during the shifting of the transmission gears from one speed selection to another. At such times after the manual control has initiated operation of the motor to disengage the clutch the manual control is rendered temporarily inoperative and the clutch is maintained disengaged in dependency on the shift position of parts in the transmission until the shift is completed, whether with or without the aid of an auxiliary accelerating device such as the brake mechanism described. As soon as the shift is completed control of the vehicle clutch by the transmission is discontinued, and the clutch may then be operated through its motor under direct control of the driver through the manually operated pedal.

KARL MAYBACH.

PUBLISHED
MAY 18, 1943.
BY A. P. C.

# K. MAYBACH
POWER OPERATED CLUTCH MECHANISM
FOR MOTOR VEHICLES
Filed May 29, 1939

Serial No.
276,464
2 Sheets-Sheet 1

Fig. 1

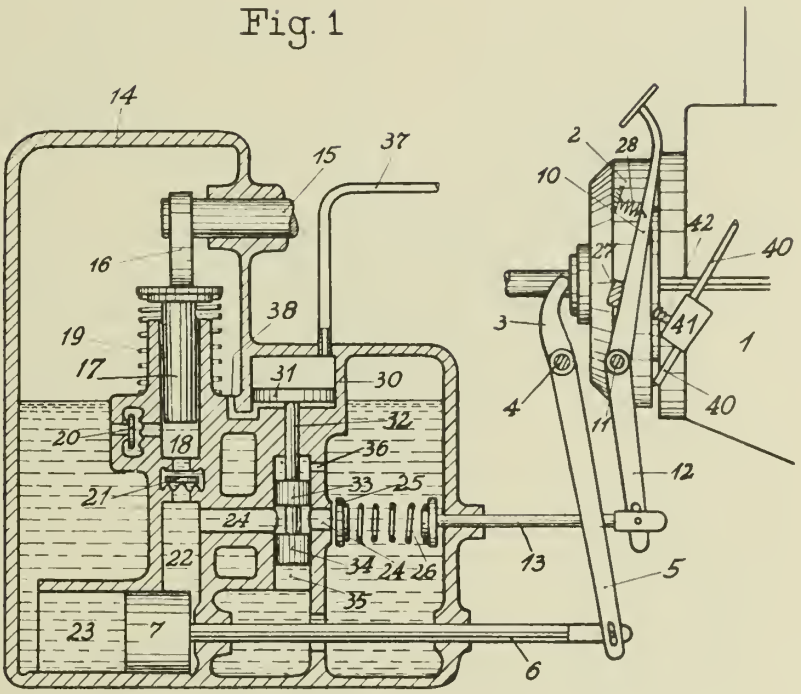


Inventor:
Karl Maybach
By Edmund F. Warner Jr.
Attorney

PUBLISHED
MAY 18, 1943.
BY A. P. C.

# K. MAYBACH
## POWER OPERATED CLUTCH MECHANISM FOR MOTOR VEHICLES

Filed May 29, 1939

Serial No.
276,464

2 Sheets-Sheet 2

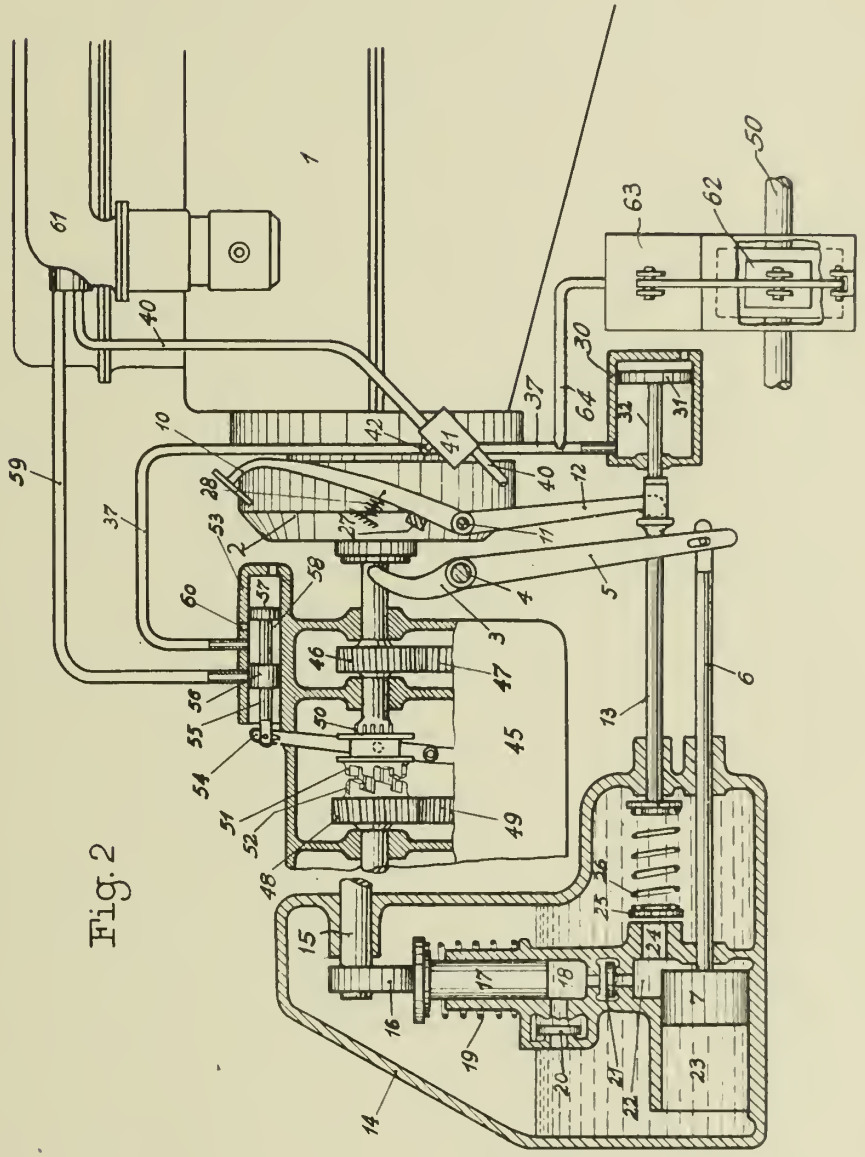

Fig. 2

Inventor:
Karl Maybach
By Edmund F. Parry Jr
Attorney

Published May 18, 1943 Serial No. 276,706

# ALIEN PROPERTY CUSTODIAN

## PROCESS AND APPARATUS FOR THE PRODUCTION OF HIGH VALUE ALCOHOLS FROM SUGARS AND SUGARY SUBSTANCES

Felix Grandel, Emmerich am Rhein, Germany; vested in the Alien Property Custodian

Application filed May 31, 1939

This invention is for improvements in or relating to the production of high value alcohols from sugars and sugary substances.

It is known to reduce sugars and sugary substances by means of electrolysis in an electrolytic cell divided by a ceramic diaphragm into separate cathode and anode chambers, using a mercury-lead cathode and an aqueous electrolyte containing a sulphate of an alkali metal or of an alkaline earth metal, the sugar or sugary substance being contained in the cathode chamber.

With this known method, when a current is passed through the electrolyte, free alkali metal or alkaline earth metal is formed at the cathode and this forms with the mercury an alkali- or an alkaline earth amalgam. The hydrogen liberated reduces the sugar to its corresponding alcohol.

Due to the continuous formation of amalgam and conversion of the amalgam with water—assisted by the $SO_4$ ion movement from the catholyte through the ceramic diaphragm to the anode or the anode chamber—the alkali- or alkaline earth hydroxide concentration continually increases, until the catholyte contains only alkali- or alkaline earth hydroxide and the anolyte only sulphuric acid.

In the process, the diaphragm used is generally made of clay and it is found that due to the strong hydrolytic effects of the OH ions in the catholyte and the H ions in the anolyte, corrosion tends to occur of the diaphragm when working for long periods, with the result that the sugar-tightness of the diaphragm becomes impaired and in consequence sugar tends to pass into the anode chamber where it easily oxidises at the anode into undesirable carboxylic acids.

Another disadvantage of the known process is that, due to the continual increase of the OH concentration in the catholyte during the process of electrolysis, the alkali hydroxide tends to exercise a prejudicial effect on the sugar. For this reason, the pH concentration of the catholyte has to be carefully controlled and adjusted to certain pH intervals at a certain temperature by constant addition of sulphuric acid, and even in spite of this there is always the danger that the catholyte may become darkly coloured, with the result that the alcohol produced is correspondingly darkly coloured and requires an extensive after-treatment to work it up to the quality of a standard pure product.

Thus, the newly formed alkali or alkaline earth salt formed as the result of neutralisation with sulphuric acid during the process of electrolysis has to be carefully separated from the high value sugar alcohol to be obtained by a series of crystallisations of the final electrolyte followed by the addition of a precipitating dissolving means such, for example, as ethyl alcohol. Even then moreover, a complete separation of the electrolyte salts can never be obtained with this process, the purest final product obtainable with it still containing generally about 1.5% of residual sodium sulphate together with about 0.82% of residual glucose.

The object of the present invention is to provide an improved process which will avoid these difficulties, as hereinafter set forth.

According to the invention, a process for the production of high value alcohol from sugar or a sugar substance by electrolysis in a cell divided by a diaphragm or diaphragms into one or more anode chambers and one or more corresponding cathode chambers is characterised in that the sugar or sugary substance is subjected to direct cathodic reduction in an aqueous solution of an ammonium salt.

The aqueous solution of a salt of ammonia may, if desired, contain a proportion of ammonia dissolved in it.

Further according to the invention, the cathode used in the process is preferably a cathode composed of pure lead and/or cadmium and/or a lead-cadmium alloy, instead of the usual mercury cathode.

Preferably, moreover, the process is operated with a relatively large total cathode surface, and similarly a relatively large total anode surface in immersion in the electrolyte.

Further according to the invention, the diaphragm which separates the cathode chamber from the anode chamber of the electrolytic cell is preferably composed of a non-ceramic material, for example a micro-porous hard rubber or vulcanised fibre material.

It is to be understood that the terms "sugar" and "sugary substance" as employed herein include all the monosaccharides and the non-hydrolysed and entirely or only partly hydrolysed disaccharides as well as the oligosaccharides.

In order to provide a relatively large total cathode surface, thereby increasing the reducing capacity of the surfaces per electrolysing unit, the use of lead plates with vertical reinforcements (which, at the same time, with large plates, stiffens the surface) or the use of accumulator plates (which, for example, have eight times the surface per unit of superficial area of the surface) have proved specially satisfactory.

By "accumulator plates" is meant plate-shaped formations consisting of ribs, the hollow spaces between which are filled with lead oxides, for example PbO, $PbO_2$ and $Pb_3O_4$ or mixtures thereof. When such electrodes are connected up as cathodes in the electrolytic cell, a fine film of pure lead forms on their surfaces. This lead film may be effectively mixed with the lead oxides of the electrode or inserted. For the most advantageous anode-cathode ratio (1:1) for the electrolysis accumulator plates having a large area are also used for the anode.

As chemically pure lead, according to the quality of the surface, has an electric over-voltage of between 0.35 and 0.64 volt, cadmium an over-voltage of 0.48 volt, while mercury, however, has a much higher over-voltage of between 0.78 and 0.5 volt, the reduction of the sugar takes place under extremely difficult conditions, with the result that its direct reduction in the process to high value alcohol was not to be expected.

By using a non-mercury cathode in accordance with the invention, the electrolytic process according thereto is considerably cheapened on account of the saving of mercury, and in addition the working up of the final electrolyte is simplified and a non-poisonous product is, moreover, obtainable.

The ammonium salt of the electrolyte may conveniently be ammonium sulphate. Other ammonium salts may be used, however, including, for example ammonium nitrate, ammonium carbonate, ammonium bicarbonate, ammonium bisulphate, ammonium metaborate and ammonium chloride.

The oxygen separated by the electrolysis in the process and to a smaller extent the released hydrogen may be collected in suitably constructed closed vessels and used for other technical purposes.

It is an important feature and further advantage of the process according to the present invention that a neutralisation and control of the pH value of the catholyte in the process is not required as the pH value of ammonium hydroxide does not rise above the limiting value of 10.8 and, what is more important, ammonium hydroxide has no disturbing and colouring influence on the various sugars and sugary substances which may be treated in the process or on the alcohols which may be formed therefrom. Thus, whereas an 8% sodium hydroxide solution containing 15% of pure glucose has a yellow-brown colour after only 10 hours of treatment, an 8% ammonium hydroxide solution containing 15% of pure glucose at 25° C. is as clear as water after 24 hours of treatment.

A further advantage of the improved process according to the invention is the simplicity with which the ammonium hydroxide containing electrolyte may be worked up for the recovery of the alcohol contained in it, namely by simply distilling off the superfluous ammonia so as to effect a concentration of the alcohol content and a separation of the ammonia therefrom. The difficult and expensive operation, therefore, necessary in the known process of separating alkali- or alkaline earth sulphates from the final electrolyte by the addition thereto of precipitating dissolving agents is eliminated. In addition, in the known process, care has to be taken to evaporate to complete neutralisation the final electrolyte (slightly acid and slightly alkali sugar and high value alcohol solutions immediately become darkened in the evaporation process), whereas with the improved process according to the present invention, any excess of ammonium hydroxide on evaporation of the final electrolyte plays no part in the sense of deleteriously affecting the alcohol, as ammonium hydroxide does not change either the sugar or the high value alcohol in the given concentrations.

The use as the electrolyte in the process of a solution of an ammonium salt, with or without a proportion of free ammonia dissolved in the solution, provides the possibility of using in conjunction with the process the process discovered by Lobry de Bruyn, of partial racemisation of monosaccharides without any substantial darkening of the reaction product by the use of aqueous ammonia (ammonium hydroxide solution) prior to the actual carrying out of the electrolytic reduction of the monosaccharide to the corresponding alcohol but as a step in direct connection therewith.

From α-glucose is formed, for example α-mannose which with cathodic reduction almost entirely changes over to α-mannitol, whilst without racemisation the glucose would be transformed by the cathodic reduction into a mixture of about 80% of sorbitol and about 20% of mannitol, the mixture being a syrup.

The completion of the reaction of the Lobry de Bruyn transformation takes place mostly, as has been determined, during the subsequent electrolysis.

As sugars and sugary substances, particularly those containing an aldehyde group in the molecule, are oxidised more readily than they are reduced, it is important that the dissolved sugar or sugary substance shall not come into contact with the anode or pass into the anode chamber of the electrolytic cell.

The known ceramic diaphragms of alundum have not been satisfactory from this point of view, as after a comparatively short period of use of the cell, they tend to permit the passage of sugar through them, on account of the corroding effect on the diaphragm at one side thereof of the acid of the anolyte and on the other side of the alkali of the catholyte. In addition, an alundum or like ceramic diaphragm has to be fired and is easily broken. It is for these reasons that, as hereinbefore stated, it is preferred according to a feature of the present invention, to employ a diaphragm composed of a non-ceramic or synthetic material such, for example, as microporous hard rubber with a 10 to 15% porosity or a vulcanised flexible fibre substance.

The invention will now be further described with reference to several examples of execution which illustrate how the invention may be carried into effect.

*Example 1*

In this example, the catholyte used was an aqueous solution containing 15% of glucose and 5% of ammonium sulphate and the anolyte employed was a 3% aqueous solution of ammonium sulphate. The electrolytic reduction was carried out at a temperature of 25 to 30°C. and with the use of a current density of 0.005 amps/cm² and a voltage of about 4 to 5 volts per bath.

The apparatus used consisted of an electroliser which could be externally cooled and in which was placed a cylinder, open at the top and closed at the bottom, of micro-porous hard rubber of about 5 mm. in thickness and having a porosity of 15%. This cylinder constituted the diaphragm of the cell and in place of micro-porous

hard rubber as the component material of the diaphragm, vulcanised flexible fibre or some other suitable non-ceramic natural or synthetic material could have been used. In the inner chamber of the cell thus formed were placed the cathode, the catholyte and a glass stirrer, while the outer chamber contained the anolyte and the anode.

The level of liquid in the anode chamber was a few millimeters higher than in the cathode chamber, as this is found to be preferable on account of the fact that it ensures against passage of the sugar solution into the anolyte in the anode chamber due to the presence of possible leaks in the diaphragm or to the perviousness thereof.

In this connection, it may be remarked further that, taking into account that the diaphragm material will develop osmotic forces, the electrolysis concentration of the anolyte should, as was the case in this example of execution of the invention, be less than that of the catholyte, whereby the osmotic balance shall be in the direction of anode to cathode and not in the reverse direction.

The cathode and anode used in the the example consisted of open-ended cylinders of chemically pure lead, although, as hereinbefore indicated, cadmium could have been used in place of lead. These cylinders were degreased with ether, rubbed with fine sand and several times sprayed carefully with distilled water, prior to their insertion in the respective chambers of the electrolytic cell, although it may be remarked that with cylinders which have already been used, a mere mechanical cleaning is generally sufficient. Then, following the cleaning treatment, the cathode and anode cylinders were submitted to an electro-chemical treatment in a 20% solution of sulphuric acid with the use of a current flow of 0.02 amp/cm², the treatment lasting for ½ an hour. The electrode which in this process of electro-chemical treatment of the electrode was subjected to anode oxidation was then inserted into the cathode chamber of the electrolytic cell while the other electrode was inserted into the anode chamber and the process of electrolysis was commenced. It will be understood that with the use of accumulator plate electrodes, the foregoing preparation of the electrodes would not have been necessary.

The electrolytic cell having thus been prepared, a filtered solution containing, as above described, 15% of glucose and 5% of ammonium sulphate in distilled water was placed in the cathode chamber of the cell and an aqueous solution containing 3% of ammonium sulphate in the anode chamber, the temperature of the solutions being about 30° C. The electric current was then switched on.

The cathode and anode current densities were thus, as above indicated, namely 0.005 amps/cm² and the ratio of cathode surface to anode surface was 1:1.6. The cell voltage was, also as above indicated, 4 to 5 volts and the temperature maintained during the electrolysis was from 25 to 30° C.

During the electrolysis, the degree of reduction in the electrolyte was tested by determining the glucose content of the catholyte solution. When the glucose content had been reduced to 0.8 to 1.0%, the current was switched off and the solution was worked up for sorbitol and mannitol.

The ammonium hydroxide containing catholyte was for this purpose evaporated during the concentration of the high value alcohol for the purpose of recovering the ammonia liquor, the recovered ammonia liquor being afterwards neutralised with a part of the final anolyte of sulphuric acid for regeneration of the used ammonium sulphate.

The current yield was about 70%, the current consumption 4 kilowatts per kilogram of sorbitol (mannitol mixture) and the chemical yield was about 80% of the theoretical yield.

*Example 2*

In this example, a catholyte consisting of 15% of pure xylose or a technical pentose product from beechwood extraction or saccharification with a corresponding pentose content, and 5% of ammonium sulphate dissolved in distilled water is used and is treated as in Example 1.

The final product, containing xylite and arabitol or a mixture of those pentites corresponding to the technical pentose-containing product used in the process, in the event of such a product having been used therein, is of good chemical and electro-chemical quality. With the use of pure xylose, the raw product is a clear syrup which on standing for a long time forms a crystalline mass and from which pure xylite can be obtained suitable, for example, for the production of xylite pentanitrate. With the use, on the other hand, of a technical pentose product, the syrupy pentite mixture obtained can be used as a substitute for glycerine in the paint and chemical industries.

*Example 3*

In this example a 15% cane sugar solution was heated with a 3.7% sulphuric acid solution to a temperature of 50 to 90° C. for one hour. After invertion thus, it was neutralised with ammonium hydroxide. An invert sugar solution was thus obtained containing about 15% of glucose and a similar percentage of fructose.

This invert sugar solution was then electrolysed as in Example 1. A mixture was obtained consisting of a relatively large proportion of mannitol and a correspondingly small proportion of sorbitol, as fructose is completely transformed into mannitol in the process.

*Example 4*

In this example, commercial water-clear strong syrup containing about 38–42% of glucose, 40–45% of dextrine (malt erythodextrine) and 15–18% of water was diluted with distilled water so as to obtain a 20% glucose-dextrine solution. 5% of ammonium sulphate was then added and the solution was subjected to cathodic reduction as in Example 1.

As the result, not only was the glucose contained in the syrup transformed into mannitol and sorbitol, but also the dextrines.

*Example 5*

In this example pentosane, which comprises, for example, 50% of syrup on the pre-extraction of wood saccharification, was treated in a low pressure autoclave composed of lead with a 3.7% aqueous sulphuric acid solution at a temperature of about 120° C. until by hydrolysis all of the pentoses in the syrup were released from the pentosane. The syrup was then neutralised with ammonium hydroxide and submitted to cathodic reduction in the manner described in Example 1.

The final product obtained was a mixture of tetrites and pentites.

*Example 6*

In this example, non-hydrolysed disaccharides, for example, maltose, lactose and cellobiose, are made up into a 15% aqueous solution which contains in addition to the disaccharides, 5% of ammonium sulphate. The resulting solution is then subjected to cathodic reduction in the manner described in Example 1.

There remains after evaporation of the resultant ammonia during the hydrolysis, a viscous to oily product which, after dissolving in alcohol of high concentration and then placing in a refrigerating chamber, crystallises into a soft powder, which by its fusing point, specific properties and hydrolytic decomposition, is identifiable as a mixture of maltite, lactite and cellobite corresponding to the disaccharides used in the process.

*Example 7*

In this example, a 15% aqueous solution having a specific rotation angle of $\alpha_D 20 - +15.9$ was heated, with an addition of 2% of ammonia, at a temperature of 50° C. until, after about 12 hours, the specific rotation angle was reduced to $\alpha_D 20 - +3.5$. This was the sign that a far reaching conversion had taken place from glucose to mannose according to the reaction discovered by Lobry de Bruyn. The solution, which was faintly coloured, was then electrolysed in the manner described in Example 1. During the electrolytic reduction, the solution cleared after a few hours, the specific rotation angle further falling to 1/1.5.

The final product obtained was a slightly stiff syrup which was capable of withstanding temperatures above 200° C. and which contained a large proportion of mannitol. Due to its special properties, the syrup was particularly suitable for esterification purposes instead of glycerine.

It has been found that for purposes of large scale effectuation of the process, it is advantageous to employ a form of apparatus constructed as shown in the accompanying drawings, which will now be described.

In these drawings,

Figure 1 is a plan view, and

Figures 2 and 3 are respectively an end and side elevation of the apparatus.

The apparatus shown consists of an electrolytic cell generally denoted with the letter A, a low lying collecting vessel B provided with cooling pipes, a centrifugal pump C and a raised storage vessel D for the anolyte to be used in the apparatus.

The catholyte is distributed by means of the distribution tube $B_1$ to a number of individual cathode chambers provided in the cell A and the supply of catholyte to the chambers is accurately regulated by means of cocks *h* disposed near the bottom of the cell. After passing through the cathode chambers, the catholyte is caused to flow through the tubes $B_2$ into a channel $B_3$ and from thence back into the collecting vessel B from which the solution has been pumped into the distribution tube $B_1$ by means of the pump C.

The anolyte is stored in the vessel D from which it flows through a distribution tube $D_1$ into a number of anode chambers provided in the cell in correspondence with the cathode chambers therein. These anode chambers have no overflow. The flow of anolyte to the anode chambers is accurately controlled by means of cocks *h*. Should it be desired to empty the anode chambers, the cock $D_2$ is closed and a valve $D_3$ is opened.

The cell is supplied with current by way of a negative current bar connected in common to all the cathodes of the cell and a positive current bar similarly connected to all of the anodes of the cell.

All parts of the apparatus which come into contact with the liquids therein are made of non-metallic material, for example earthenware, hard rubber or suitable forms of wood or other natural or synthetic materials.

The electrolytic cell A consists of eleven separate frames *a* of hard rubber or specially prepared non-swelling wood combined in the form of a filter press and held together by means of six tension bolts *b*. The diaphragms of the cell, which are marked *c*, are held between the frames and rubber packings may be inserted to ensure a tight fit therewith.

This arrangement enables a uniform distribution of the anode chambers, which are marked *d*, and the cathode chambers, which are marked *e*, to be obtained, together with almost a double utilisation of the electrode surfaces.

In the chambers of the cell, lead and/or cadmium electrodes *l*, *m* are suspended from aluminium current bars *f*, the arrangement being such that these bars which lie in wedges on the edge of the frame of the cell serve at the same time to carry the electrodes. Current flows through the aluminium bars *f* to the anodes *l* and the cathodes *m*.

On the same side of the apparatus as the current carrying bars *f* and arranged at the foot of the frame, are the two distributing tubes $B_3$ and $D_3$ and the cocks *h* for the regulation of the flow of electrolyte to the cathode and anode chambers.

In the cathode chambers, on the opposite side of the apparatus are the overflow tubes $B_2$ which conducts the catholyte into the channel $B_3$.

For collection of the hydrogen and oxygen, a hood H is fitted over the electroliser, which hood is provided with internal walls *n* separating the anode and cathode chambers. These walls rest on rubber packings o on the diaphragms to enclose the cells in a gas-tight manner.

The gases are led off through tubes *p*, *q*.

Accumulator plates having large surfaces are preferably used as the cathodes and anodes of the cell.

In the use of an apparatus of the foregoing description, the hydrogen and oxygen generated can be recovered during the electrolysis. The apparatus also has the advantage that the U-shaped frames used are easy to make and a simple construction and extension to large batteries is made easily possible. Another advantage is the utilisation of both sides of the electrodes.

FELIX GRANDEL.

PUBLISHED
MAY 18, 1943.
BY A. P. C.

F. GRANDEL

PROCESS AND APPARATUS FOR THE PRODUCTION OF HIGH VALUE ALCOHOLS FROM SUGARS AND SUGARY SUBSTANCES

Filed May 31, 1939

Serial No. 276,706

2 Sheets-Sheet 1

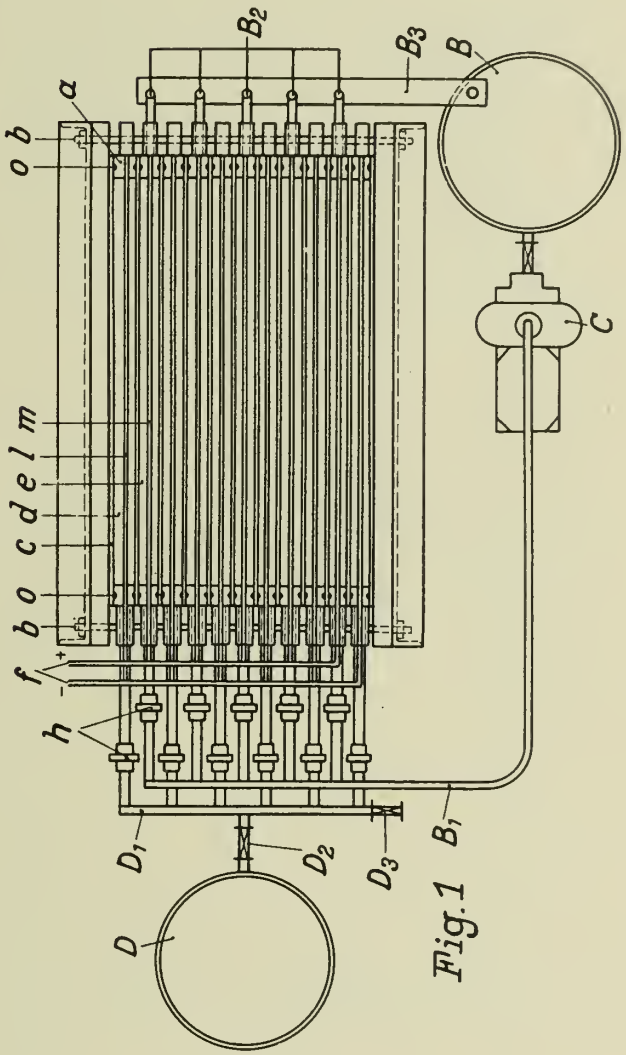


Fig. 1

Inventor:
Felix Grandel,
By: Smith, Michael & Gardner,
Attorneys.

PUBLISHED
MAY 18, 1943.
BY A. P. C.

F. GRANDEL
PROCESS AND APPARATUS FOR THE PRODUCTION OF HIGH VALUE ALCOHOLS FROM SUGARS AND SUGARY SUBSTANCES
Filed May 31, 1939

Serial No.
276,706
2 Sheets-Sheet 2

Fig. 2

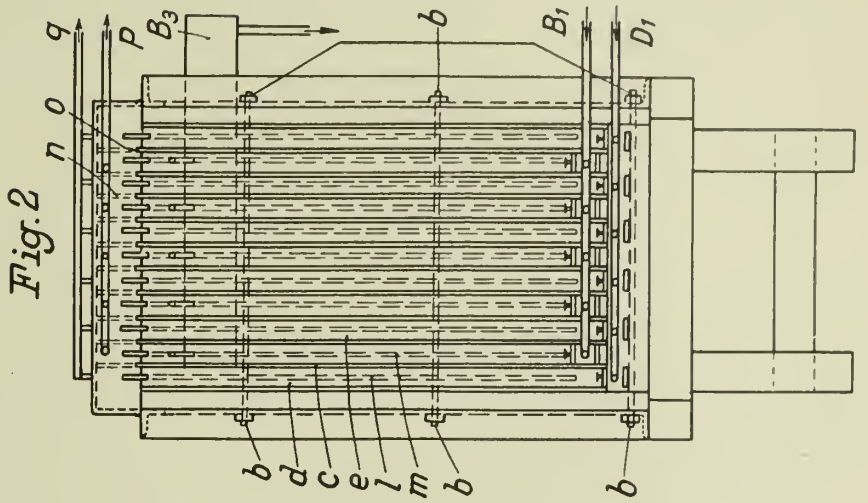


Fig. 3

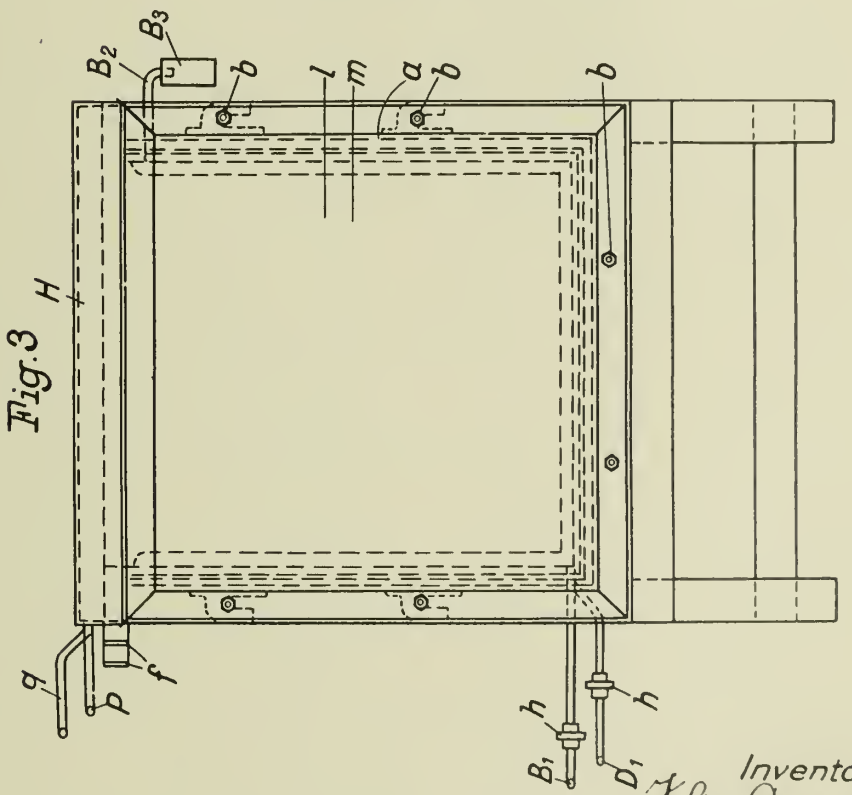


Inventor:
Felix Grandel.
By: Smith, Michael & Gardiner
Attorneys.

Published May 18, 1943 Serial No. 278,742

# ALIEN PROPERTY CUSTODIAN

## HIGH PRESSURE MERCURY VAPOR LAMPS

Josef Hofmann, Berlin-Reinickendorf-Ost, and
Felix Schreiber, Berlin-Zehlendorf, Germany;
vested in the Alien Property Custodian

Application filed June 12, 1939

This invention relates to high pressure mercury vapor lamps, such for example as are used for illumination and/or irradiation.

Such lamps are habitually provided with self-heating incandescent cathodes and a basic filling of a suitable gas, such as neon, argon, etc. As a general rule the incandescent cathodes used will be Wehnelt or similarly operating incandeccnt cathodes in which the electron emission is intensified by the use of alkali or alkaline earth metals.

However the use of such incandescent cathodes in which the electron emission is intensified requires the adoption of careful methods of gas evacuation in the manufacture of the lamps and the process of preparing the cathodes to intensify their electron emission is quite tedious. These lamps must also be carefully protected from too heavy current loads, as electrical overloads of even short duration may destroy the high emission layer of the cathodes. These injurious features would obviously be eliminated if high pressure mercury vapor lamps could be provided with self-heating incandescent cathodes of a refractory metal such as tungsten, tantalum or the like for example, without intensified electron emission. All attempts heretofore made to provide such a lamp have however failed owing to the impossibility of keeping the volatilization or evaporation of the electrode down to a point that would ensure a sufficiently long life to make the lamp commercial.

One of the objects of the present invention is to eliminate this objectionable feature characteristic of self-heating cathodes without intensified electron emission, used in high pressure mercury vapor lamps, by a special forming of the cathode body and a relative adjustment or adaptation of said body and the current load, thus providing a new basis for the simple and commercial construction of high pressure mercury vapor lamps.

The present invention is based upon the discovery that in high pressure mercury vapor lamps using self-heating incandescent cathodes without intensified electron emission, volatilization or evaporation of the electrodes can be reduced practically to zero, providing care be taken that the area of the surface from which the electron emission that feeds the arc emanates be of suitable or sufficient size. Where the surface area from which the arc emanates in the case of a tantalum cathode is practically no larger than a dot, so that practically the entire electron emission is delivered from a surface area of about 0.01 $cm^2$, an arc of a current strength of 4A could obviously only be maintained by a purely thermal electron emission on condition that said surface area be heated to a temperature of 2750° C. or thereabout (emission 400 $A/cm^2$). At that temperature, however, tantalum, of which the melting point is 2900° C., evaporates or volatilizes appreciably. On the other hand if it were possible to increase said surface area from which the electrons are emitted to 0.5 $cm^2$, then said surface area from the time it reaches a temperature of 2350° C. would emit a purely thermic electron emission of 4A (emission 8 $A/cm^2$), which would enable the arc to be maintained at a much lower temperature of the cathode and with a negligibly slight volatilization of the latter.

By careful investigation and experimentation we have discovered that to secure an arc emitting surface area of sufficient size in accordance with the above example, it will not suffice simply to give the cathode a large surface, for in the case of a cathode having a large surface the area of that part of its surface from which the arc emanates will be practically restricted to a dot. It is also a striking fact that the area of that part of the surface from which the arc emanates will not be increased by the simple expedient of rounding off the heretofore used sharpened pencil-shaped electrodes or by providing them with means to secure a better heat repartition, in the hope that the heat generated will thus be distributed over a greater area of the cathode surface. On the other hand, by investigation and experiments we have discovered that the desired increase in the area of that part of the cathode surface from which the arc emanates can be secured simply by making the cathode of a sheet metal having a high melting point, such as tantalum for example, and reducing the heat losses of said thin cathode as much as possible. Such reduction of heat losses may be effected by any suitable means, a very simple means consisting of an envelope surrounding the cathode and acting as a reflector to reduce the heat losses due to radiation.

In the illustrative embodiment of the invention shown in Figs. 1 to 4 the cathode is made of thin sheet metal having a high melting point and may be given different shapes as hereinafter described.

Our investigations and experiments have also led us to the discovery that the results sought to be attained can be secured with pencil-shaped electrodes of metals having a high melting point, such as tungsten, tantalum, etc., by making the

load sufficiently high relatively to the heat capacity and the radiating surface of the cathode. Thus the striking fact is established that lamps using pencil-shaped cathodes of a definite thickness, without intensified electron emission, volatilize strongly if the load be too low as well as if the load be very high, but that between these two limits there exists a mean load zone, within which the volatilization is kept within negligible limits.

The cause of this phenomenon seems to reside in the size of the area of the cathode surface from which the arc emanates and the temperature of said area. In the case of low strength currents the entire body of the incandescent cathode is subject to a relatively low degree of heat, so that only a very small arc emission area is developed. This very small area however reaches a very high temperature. Thus the point or apex of the conical end of a pencil-shaped tungsten cathode of 3 mm thickness can have a 1 $mm^2$ area of its surface heated by an arc of a 2A current to a temperature of over 3300° C. (emission 200 $A/cm^2$) without the remainder of said electrode ever reaching the incandescent temperature required for electron emission. From said apex, however, there may be emitted a jet of volatilized tungsten which very soon blackens the walls of the lamp. If the strength of the current of the arc be increased to 10 A the temperature of said cathode throughout 10 mm or thereabouts of its length will rise to 2700° C. (emission 14 $A/cm^2$). Instead of a point or dot like area heated to 3200° C. we therefore now have an area of about 1 $cm^2$ heated to 2700° C., so that the volatilization of the electrode becomes negligible. If the lamp in this condition be brought within the high pressure zone of the mercury vapor discharge, the volatilization of the electrode drops practically to zero. If the strength of the current be raised appreciably above that given, volatilization again sets in on account of the overload.

There is therefore a well defined propitious zone for the regulation of the conditions of operating relatively to the dimensions of the electrode used.

By thorough tests we have found that there exists a very simple rule for keeping within this propitious zone, namely, said propitious zone is reached when the drop in voltage at the heated electrodes is less than 50 volts. As drop in voltage at the electrode should be taken that value or quantity which is obtained by deducting from the voltage at the terminals, the drop in voltage which is attributable to the arc and which is easily determined by comparison of lamps of different lengths. As a result of the favorable distribution of the space charge, the thus determined voltage drop at the electrodes will be all the smaller the greater the electron emitting area of the cathode surface is per current strength unit.

Another object of the invention therefore is to provide a high pressure mercury vapor lamp, in which the thickness of the incandescent electrodes without intensified electron emission, and the load of the lamp, are relatively adjusted or adjustable to reduce the voltage drop at the electrodes to less than 50 volts.

The invention and the objects thereof above set forth, as well as such other objects as shall hereinafter appear, will be readily understood from the following description, taken in connection with the accompanying drawing of embodiments of the invention herein given for illustrative purposes, the true scope of the invention being more particularly pointed out in the appended claims.

In the drawing:

Fig. 1 shows diagrammatically a longitudinal section of a tube embodying an illustrative embodiment of the invention comprising sheet-metal electrodes;

Figs. 2, 3 and 4 each show one end portion of a tube similar to that of Fig. 1, having sheet-metal electrodes of different shapes;

Figs. 5 and 6 are diagrams illustrating the advantage of using thin sheet-metal electrodes;

Fig. 7 is a graph showing how, for a given strength of current, the drop in voltage is dependent upon the thickness of the electrodes;

Fig. 8 is a graph showing how, for a given thickness of electrode, the drop in voltage is dependent upon the strength of current;

Fig. 9 shows diagrammatically a longitudinal section of a tube embodying an illustrative embodiment of the invention comprising pencil or wire shaped electrodes;

Fig. 10 is a graph which shows the limits of the propitious zone to be selected in accordance with the present invention, for electrodes of given thicknesses;

Figs. 11 and 12 show one end of a tube similar to that of Fig. 9, comprising thicker pencil-shaped electrodes with rounded off free ends;

Fig. 13 shows one end of a tube similar to that of Fig. 9, in which the thin pencil or wire electrodes terminate in a hook like formation;

Fig. 14 shows one end of a tube similar to that of Fig. 9, in which the free end of the thin wire electrodes is loop shaped;

Fig. 15 shows one end of a tube similar to that of Fig. 9, in which the thin wire electrodes are provided, somewhat back from their free ends, with a lateral, thin sheet-metal extension.

Referring to the illustrative embodiment of the invention, Fig. 1, a tube of suitable material, herein quartz, is shown at 1. In each of the ends of said tube, two supply wires 2*a*, 2*b* and 3*a*, 3*b*, respectively, are sealed in the molten glass. These wires carry the actual electrodes, which in this illustrative embodiment of the invention consist of thin U-shaped sheet-metal bands 4 and 5 of a thickness of approximately 0.08 mm. To reduce heat radiation from the area of the electrode surface to which the arc is attached, those portions of said tube 1 surrounding said surface areas may be provided with suitable reflecting means, herein conveniently consisting of silver plated sheet-copper sleeves or bands 6 and 7.

Said tube 1 will be provided with a filling of suitable gas and contains a small amount of mercury, a few milligrams, the quantity of mercury being such that it will be completely vaporized when the tube is in high pressure operation. Herein argon gas is used as a filling with a pressure of about 20 to 30 mm. The mercury is indicated by the small globule 8 in Fig. 1. For operation with an alternating current of 220 volts the lamp will preferably be connected in series with suitable means for controlling or reglating the strength of the current, such as a 0.1 to 0.2 Henry choking coil, (not shown).

Instead of the U-shaped electrodes of Fig. 1, cylindrical electrodes 6, as shown in Fig. 3, or cup-shaped electrodes 6*a*, as shown in Fig. 4, of thin sheet metal, may be used. The electrodes may be recessed as shown at *a* in Fig. 2, for example,

to diminish the carrying off of heat from the emitting head. What is of capital importance in each case, however, is not only that the electrodes be made of material having a high melting point, but also that they be quite thin, of very thin sheet-metal, for example, as above.

A reference to Figs. 5 and 6 will clearly demonstrate the importance of making the electrodes of quite thin material. If as shown in Fig. 5 a quite thick metal sheet be used, isothermal lines such as *a* to *d* will be formed about the highly heated arc emission zone. But if a quite thin electrode, one made of very thin sheet metal, for example be used, the isothermal picture will be somewhat as shown in Fig. 6, from which it will be clearly seen that in this case there will be a far less abrupt drop in temperature as between the highly heated arc emission zone *x*—*y* and the cooler side zones heated mainly by the fall at anode when operating with an alternating current. In this case, therefore, the temperature necessary for thermal electron emission will be produced over a relatively greater area.

The actual size of that part of the surface of the cathode, from which the electron emission takes place can naturally not be accurately determined by observation. During the operation one distinguishes only that a definite area of the cathode surface, somewhat like that hatched in Fig. 3 becomes heated to a particularly high temperature. A means for determining the size of the surface area which actually takes part in the emission of electrons is furnished, however, by the drop in voltage which in operation occurs in the immediate vicinity of the electrodes and very materially affects the total drop in voltage of the lamp. For this drop in voltage furnishes, among other things, a means for measuring the contraction to which the path of the discharge is subjected in the immediate vicinity of the spark emission area on the cathode. If this area is very small the arc must be greatly contracted in close proximity to the cathode, and a relatively high drop in voltage occurs. On the other hand, if said area is large, only a slight contraction of the arc will occur in close proximity to the cathode, and the drop in voltage will be correspondingly less. This phenomenon is best observed when the lamp, at the beginning of its operation, for example, is still in the low pressure operating stage, that is to say before any contraction of the arc due to any other cause exists.

The total drop in voltage in the case of an arc discharge is obviously composed of the voltage drop at the cathode, the voltage drop at the anode and the voltage drop in the ionized gas column. The voltage drop at the cathode and that at the anode cannot be accurately determined separately in the case of an alternating current lamp, as they are both dependent on the distribution of the temperature over the electrodes and are therefore bound together functionally. Hereinafter they will be referred to by the single term "voltage drop at the electrodes" which includes both and is designated by "Ue". The voltage drop in the ionized gas column, designated by "Us", can, on the other hand, be determined by comparing the total voltage drop, designated by "Ug", which occurs in lamps of different lengths of arc, all other conditions being equal.

Experiments have demonstrated that volatilization or evaporation of the cathode can always be kept at a sufficiently low level for the production of lamps having a sufficiently long life to render them commercial, providing the electrodes be so thin relatively to the operating load of the lamp, that the voltage drop at the electrodes, Ue, falls below 50 volts. This operating condition can be attained either by using an electrode of predetermined thickness and varying the current load, or inversely by using a predetermined current load and choosing a suitable electrode thickness.

In the following table are given the values determined with lamps having sheet- tantalum electrodes and an argon filling of 25 mm pressure, which, with an arc 100 mm in length, and operating at low pressure (0.01 to 10 mm mercury vapor pressure) registered a mean voltage drop, Us, of 21=2.1 volts/cm in the ionized gas column:

| Thickness of electrode | A | Ug | Us | Ue |
|---|---|---|---|---|
| | | *Ca.* | | |
| 0.5 mm | | | | 50 |
| 0.25 mm | 4 | 60 | 21 | 39 |
| 0.10 mm | 4 | 75 | 21 | 24 |
| 0.08 mm | 4 | 40 | 21 | 19 |
| 0.05 mm | 4 | 30 | 21 | 9 |

These values are graphically shown in Fig. 7.

The lamp provided with an electrode of sheet tantalum of 0.5 mm in thickness could not be made to burn quietly with a current of less than 5 A. With that load there was still a very marked volatilization of its electrodes. On the other hand, when this lamp was operated with a current load of 10 A, the value of Ue dropped to 25 to 30 volts, and notwithstanding the increased load, the lamp could be operated with greatly diminished volatilization, that is to say under more favorable conditions for long life.

On the other hand, experiments with two lamps using sheet- tantalum electrodes, disclosed the following data showing the dependence of the drop in voltage on the strength of current in the arc:

| Thickness of electrode | A | Ug | Us | Ue |
|---|---|---|---|---|
| | | | *Ca.* | |
| 0.25 mm | 1.6 | 105 | 21 | 84 |
| | 2.75 | 91 | 21 | 70 |
| | 3.6 | 76 | 21 | 55 |
| | 5.0 | 61 | 21 | 40 |
| | 6.0 | 55 | 21 | 34 |
| | 8.5 | 45 | 21 | 24 |
| 0.08 mm | 0.75 | 93 | 21 | 72 |
| | 1.0 | 81 | 21 | 60 |
| | 1.25 | 73 | 21 | 52 |
| | 1.8 | 58 | 21 | 37 |
| | 2.5 | 48 | 21 | 27 |
| | 3.5 | 42 | 21 | 21 |
| | 4.0 | 40 | 21 | 19 |
| | 4.25 | 39 | 21 | 18 |

These values are graphically illustrated in Fig. 8. In all cases it was only when the value of the voltage drop at the electrodes, (Ue), had been reduced to less than 50 volts, by suitably adjusting or adapting the load to the thickness of the sheet-metal electrode used in each case, that the lamp gave proof that it possessed a satisfactory length of life. Thus, as an example, a lamp 100 mm in length with an argon filling (25 mm) and electrodes of the shape shown in Fig. 3, made of commercial sheet tantalum of 0.08 mm thickness could be operated for more than 1000 hours on a 220 volt alternating current network through a choking means of 0.134 Henry, and a mean current strength of 4 A, without objectionable blackening of the tube. The mean voltage of the lamp in this case rose to a round 130 volts and could have been raised to 140 volts without extinction of the lamp, that is to say, without its failing to relight within a single period.

In Fig. 9 the quartz tube 1 of the lamp has

walls of about 1 mm in thickness and is about 12 to 14 cm long. Two pencil-shaped electrodes 9 and 10 are sealed in the opposite ends respectively of said tube. These electrodes are about 0.5 mm in thickness and their length from the end wall of said tube to their free end is about 15 mm. Said tube has a filling of a suitable gas, such as argon for example, with a pressure of about 20 to 30 mm and contains a small quantity of mercury, no more than will completely vaporize when the prescribed operating temperature of 300° to 500° C is reached. Said electrodes are in circuit with a resistance 11 of about 50 ohms and an alternating voltage of about 220 volts. A choking coil of about 0.1 to 0.3 Henry can be substituted for said resistance. Conventional ignition means, not shown, (ignition strip, high frequency ignition) for the first starting of the discharge may be used.

The following table gives the drops in voltage registered at the electrodes of a number of lamps of the type shown in Fig. 9, which were operated under identical operating conditions and differed from each other only in the thickness of their pencil-shaped electrodes:

| Thickness of electrode pencil | Voltage drop at electrodes |
|---|---|
| | *Volts* |
| 0.3 mm | 7 |
| 0.6 mm | 14 |
| 0.8 mm | 22 |
| 1.0 mm | 29 |
| 1.5 mm | 39 |
| 2.0 mm | 54 |

The lamp having electrodes of 2 mm thickness could not be brought to burn quietly with the current of the strength specified. Only when the current was raised to about 5 A did said lamp burn satisfactorily.

Fig. 10 shows the limits of the propitious or most favorable zone to be selected in accordance with the present invention, using pencil electrodes of a thickness of 0.25 to 0.2 mm. The abscissa is the thickness or diameter of the pencil electrode and the ordinate is that strength of current at which the voltage drop at the electrodes reaches a determined value. The values which lie between the two outer curves I and IV are admissible, while curve III represents about the most favorable values. Load values below curve I produce an inadmissible volatilization due to overload in the above mentioned sense. Load values above curve IV give rise to an inadmissibly short life for the electrode, due to the overload on the latter.

The curves reproduced in Fig. 10 were made in operation with an alternating current by means of an adjustable ohmic compensating resistance. Operation with a direct current produces a substantially parallel displacement of the curves in question, and the same thing occurs when operating with alternating current if a choking coil be substituted for the resistance.

The graph of Fig. 10 also enables the particular electrode dimensions, which would be suitable for any predetermined load, to be readily determined. On the other hand the present invention teaches how to determine the correct load for any given lamp, by first taking from the known tables the voltage drop attributable to the arc at a given temperature, and then calculating therefrom the voltage, which, at said temperature, must exist at the terminals, if 15 to 20 volts, for example, be taken as the voltage drop at the electrodes. Then, as soon as the arc is struck, one adjusts said resistance, or said choking coil of the lamp so as to produce said voltage at the terminals. When in this way the correct adjustment or regulation of the circuit current for said lamp has been made, said lamp can at once be connected up and allowed to operate in the high pressure zone of the mercury vapor discharge, without fear of any inadmissible volatilization occurring.

In order to prevent the formation of a dot like area of emission of the arc from the very beginning of the striking of the arc, it is advisable carefully to round off the cathode at all points, particularly at its free end, instead of providing it with pointed or toothed portions, as has been suggested by some. In the case of thicker pencil shaped electrodes 12 and 13, this may be effected by rounding off their free ends in spherical form as shown in Figs. 11 and 12. But it would not be advisable to use the electrodes consisting of massive spheres carried by thin wires and with which certain tungsten arc lamps are equipped, as the long drawn out arc of the present type of lamp would immediately attach itself to said thin wire, which thus becoming highly incandescent, would buckle under the weight of the sphere or would be destroyed altogether.

The spherical rounding off of the free ends of thin wire pencil electrodes is difficult. To meet this difficulty these electrodes may be hook shaped, as shown at 14 or loop shaped, as shown at 15, in Figs. 13 and 14 respectively, their thus rounded extremity being directed toward the centre of the tube.

For starting the arc, the pencil electrode 9 of Fig. 15 may advantageously be provided with a very thin sheet-metal lateral extension 16, which is suitably secured at one edge to said electrode 9 at a suitable distance from the latter's free end. Said extension will preferably be curved spirally as shown to facilitate its introduction into the tube 1. Said pencil and said extension may be of any suitable thickness; the thickness of the former, for example, may be 0.4 and that of the latter 0.05 mm. As the striking of the arc is always preceded by an incandescent discharge of which the heat development is in proportion to the effective area of the electrode surface, said sheet extension 16 will thus be more subject to heating during the ignition operation and will heat up very quickly. Consequently the arc is first struck upon said extension and passes on to the pencil electrode only when the latter, heated by said heated extension, has reached the required temperature. As volatilization is thus greatly reduced during the period of ignition, the arrangement in question increases materially the life of the lamp and extends the limits on the charge that is permissible.

While tantalum and tungsten have been more particularly mentioned in the illustrative embodiments of the invention herein described, it will be understood that other suitable materials, such as molybdenum and niobium, having a sufficiently high melting point, could also be used for electrodes without departing from the spirit of our invention. Tantalum lamps have proven to be best suited for general commercial use. Thus, for lamps with a current consumption usual in the trade, sheet tantalum electrodes of a thickness of only 0.03 mm to 0.04 mm have proven especially advantageous. As tungsten and molybden possess greater heat conductivity than tantalum, correspondingly thinner sheet metal

must be used for electrodes for those two metals; in fact the lower specific emission capacity of those two metals makes it necessary to strive for a still greater arc emitting area on the cathode surface, that is to say, to reduce the thickness of the cathodes even below that demanded by the greater heat conductivity. This may require the sheet metal to be so thin that it would be difficult to manufacture therefrom electrodes possessing the necessary strength by the usual methods. In practice, therefore, it might be preferable to use electrodes of these two metals only in lamps subjected to relatively heavy loads.

JOSEF HOFMANN.
FELIX SCHREIBER.

PUBLISHED
MAY 18, 1943
BY A. P. C.

J. HOFMANN ET AL

HIGH PRESSURE MERCURY VAPOR LAMP

Filed June 12, 1939

Serial No.
278,742

2 Sheets-Sheet 1

Fig. 1

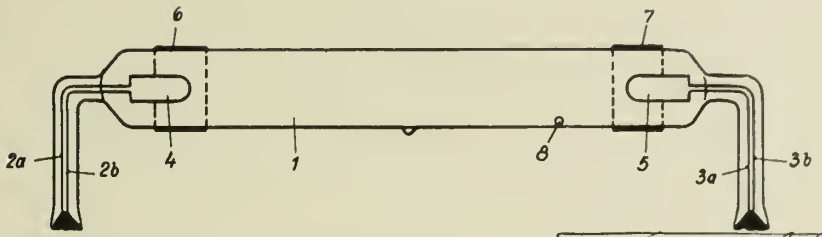


Fig 2

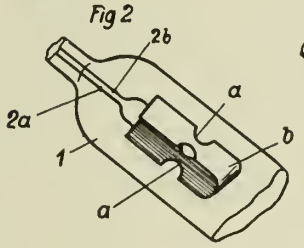


Fig. 3

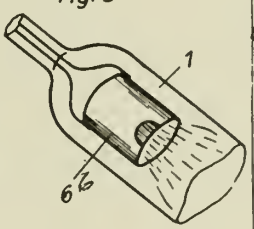


Fig. 4 cancelled per March 16, 1943

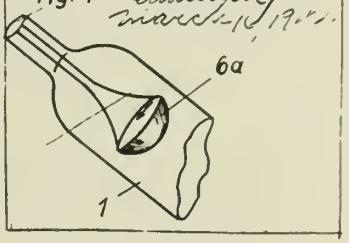


Fig. 5

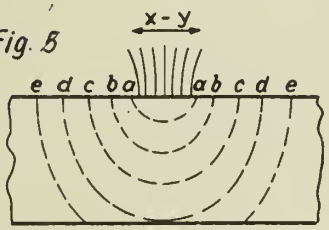


Fig. 6

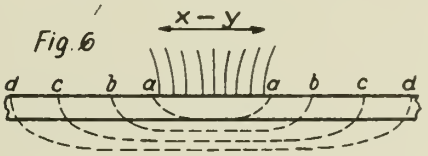


Fig 7

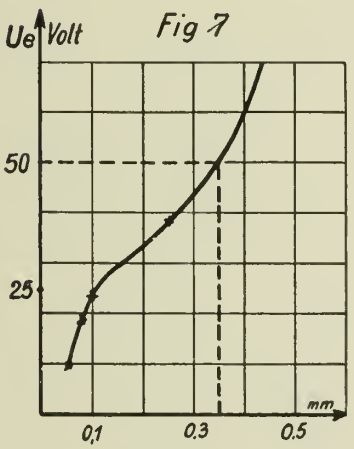


Fig. 8

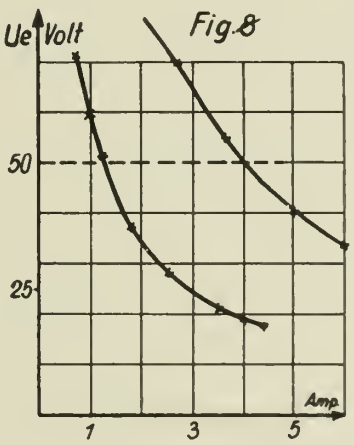


Inventors
Josef Hofmann and
Felix Schröter

PUBLISHED
MAY 18, 1943.
BY A. P. C.

J. HOFMANN ET AL
HIGH PRESSURE MERCURY VAPOR LAMP
Filed June 12, 1939

Serial No.
278,742
2 Sheets-Sheet 2

Fig. 9

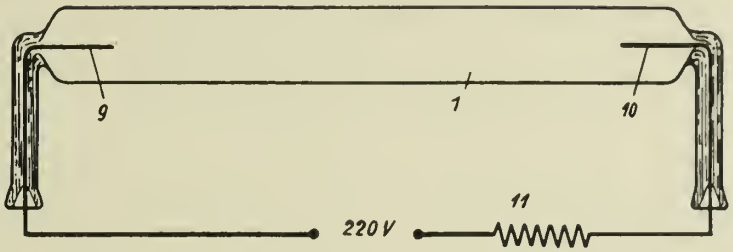


Fig. 10

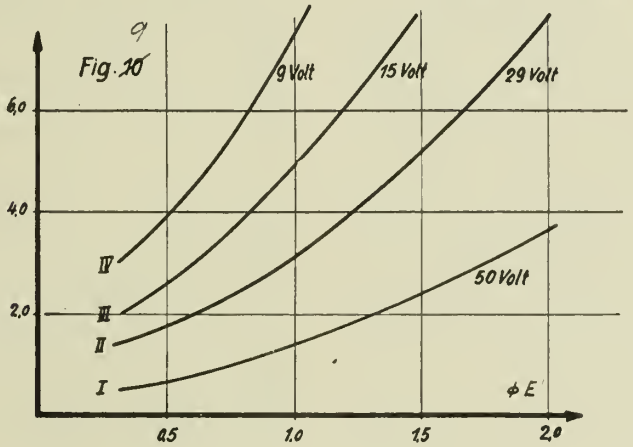


Fig. 11

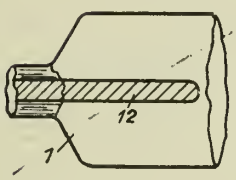


Cancelled per March 16 1943

Fig. 12

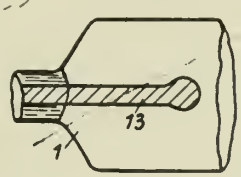


Fig. 13

Fig. 14

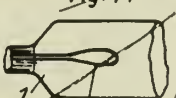


10.

Fig. 15

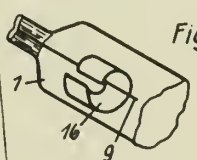


Inventors
Jos. f Hofmann
Felix Schreiber

Published May 18, 1943 Serial No. 278,776

# ALIEN PROPERTY CUSTODIAN

## MICRO-CHRONOMETER, IN PARTICULAR FOR LANDING ALTIMETERS ON AIRCRAFT FOR MEASURING THE ALTITUDE BY MEANS OF SOUND WAVES BY THE ECHO SOUNDING METHOD

Robert Wellenstein, Bremen, Germany; vested in the Alien Property Custodian

Application filed June 12, 1939

The invention relates to micro-chronometers, in particular for landing altimeters on aircraft for measuring the altitude by means of sound waves by the echo sounding method, having a time-giving member which moves to and fro or rotates at a definite speed and the position of which with respect to the initial or zero position is shown at the end of the time to be measured by the echo or other phenomenon, by a visible indication on a scale calibrated in time or distance units.

With the known micro-chronometers of this nature, the indication is always only visible for a very short time determined by the duration of the echo impulse or other phenomenon. This makes the observation very difficult.

In measuring by the echo sounding method, attempts have already been made to create the impression of a continuous indication by increasing the rate of the sounding sequence. This process can only be used, however, with advantage when the time of transit of the sound is short.

It has also been already suggested to attain a permanent indication by retaining the indication caused by the echo during the period up to the next echo impulse. This retention was obtained by a condenser which was brought by the echo to a potential corresponding to the time of transit of the sound, this potential being taken from a condenser discharging from the instant of the emission of the sound. This solution is not, however, advantageous, as a sufficient accuracy cannot be thereby attained, since the ratio of magnitude of the condenser giving the potential and of that taking the potential cannot in practice be so increased that the potential of the large condenser is not markedly varied by what is taken from it by the small condenser. Furthermore, the small condenser cannot be made as small as desired, since with a slow sounding sequence the potential of the small condenser, even when using a voltmeter (tube voltmeter) of very high ohmic resistance, is reduced by the current discharge.

A process for echo sounding is also known in which a stop-watch is used which is stopped by the echo, and remains stopped up to the instant of the next sound emission, when it moves again during the period of transit of the sound so that even though there is a more or less long stoppage of the indication, no permanent indication is attained.

All these drawbacks are obviated according to the invention in that, using a mechanical, e. g. reciprocating or circularly moved time-giving member, the visible indication is maintained throughout the duration of the echo impulse and is only extinguished by a device actuated by the following echo. In this way, a permanent indication is attained without, however, the indication suffering a loss in accuracy such as occurs with the known permanent indication with condenser discharge. A relatively large number of mechanical or optical indicating members are preferably arranged distributed over the scale of the indicating appliance, and are so connected with a relay arrangement actuated by the echo impulse that, on the arrival of the echo impulse, only the indicating member allocated to the position then reached of the time-giving member is displaced by the controlling time-giving member into the indicating position or indicating condition, all the other indicating members being meanwhile brought into the position of rest or retained therein. The indicating members may consist of gas-filled luminous tubes or luminous tube elements with auxiliary electrodes arranged in a common vessel, which tubes or tube elements on the arrival of the echo are all at first temporarily switched off by the closed-circuit current potential, whilst that luminous tube or luminous tube element, which is allocated to the position occupied by the time-giving member on the arrival of the echo, is set with its auxiliary electrode at an illumination potential.

When using a relay which after a brief deflection returns into its initial position, the illumination potential can be retained on the auxiliary electrode by a condenser until the closed-circuit current potential is again applied. It is naturally also possible by different change-over times of two relay contacts to keep the ignition potential on the auxiliary electrode until the closed-circuit current potential is again applied to the tube.

A relay can also be used with advantage which is provided with a number of actuating members, corresponding to the number of the indicating elements, which are so influenced by the time-giving member that on the arrival of the echo impulse only that actuating member corresponding to the position then existing of the time-giving member is brought or held in the indicating position, whilst the other actuating members are brought or held in the position of rest. A suitable embodiment of such a relay can be attained by the actuating members being so movably carried as armatures between the two poles of an electromagnet, that in both terminal posi-

tions they are closer to one pole of the magnet than to the other, and that constantly a piece of soft iron carried by the time-giving member circulates between the actuating members and the remoter magnet pole, in such manner that on the excitation of the magnet by an echo impulse, only that actuating member which is opposite the piece of soft iron is drawn towards the remoter magnet pole, all the others being drawn, on the contrary, to the nearer magnet pole. The actuating members of the relay can be held in the fresh position produced by the echo, by their own gravity, by frictional forces or by other breaking devices even after the expiration of the echo impulse, and in this way be specially used as indicating members, preferably in the form of light baffles. In this way, any electric switching operation either by the time-giving member or by the individual relay members is entirely avoided.

Various ways of carrying out the invention are illustrated diagrammatically in the acompanying drawings, in which:

Fig. 1 shows a circuit arrangement with gas discharge tubes as indicating members,

Figs. 2 and 3 show an indicating device with indicating elements arranged in a common vessel, in cross-section and plan respectively,

Fig. 4 is an axial section of a third embodiment of the indicating apparatus,

Fig. 5 is a cross-section on the lines A—A of Fig. 4,

Fig. 6 shows a fourth embodiment with the time-giving arrangement and relay developed; and

Fig. 7 shows a fifth embodiment partly in section.

The devices shown may, for example, be used for determining the altitude of flight on aircraft by the echo sounding method. In the echo-method, the time between the emission of the sound impulse and the return of the echo is determined. The arriving echo in this case releases an electric relay arrangement whereby a visible sign is produced on the scale of the indicating appliance.

There is used as the relay in the first embodiment shown in Fig. 1, a micro-chronometer with two sets of contacts. The two moving contact arms *a* and *b* of the relay are connected with the two terminals of a source of potential. In the position of rest, this potential is applied across the contacts *c* and *d* connected respectively to the anode and cathode of a number of gas-filled luminous tubes *f* which are connected in parallel and are arranged distributed over a circular or rectilinear scale. On the arrival of an echo, all the tubes *f* are, as will easily be seen, simultaneously disconnected from the source of potential and the relay arm *a* connected with the positive pole strikes against a contact *g* which, through a contact arm *h* rotating with uniform speed and a collector *i*, is connected with the grid *k* of a tube *f*. The contact arm rotates in synchronism with the sounding sequence. It produces on the emission of the sound the connection with that tube *f* which is in the zero position of the scale. The grids *k* of the tubes *f* are connected not only with the collector *i* but also each through a condenser *m* with the negative pole. Thus, on the arrival of an echo, the condenser *m* of that tube which is just at this instant connected through the collector *i* with the rotating contact arm *h* is charged. On the return of the contact levers *a* and *b* of the relay into the initial position (*c*, *d*) a potential is again applied to the anode and cathode of all the tubes. This potential is, however, so slight that it does not normally cause the tubes to light up. Only that tube the grid condenser *m* of which has obtained potential through the collector *i* and the rotating contact arm *h* is now illuminated. Immediately after the illumination of the tube, the potential on the grid condenser *m* again collapses as this potential can no longer be maintained on the flowing of the closed-circuit current. As soon, therefore, as a fresh echo arrives and the relay responds, the previously illuminated tube is also extinguished and, on the return of the relay into its position of rest, only that tube can again be ignited the condenser of which is again brought to illumination potential through the collector *i* and the revolving contact arm *h*.

It is advantageous to use the negative blue glow for the indication, since only a comparatively small potential is necessary for its production. Instead of a large number of separate luminous tubes, there may be provided individual luminous tube elements which, as shown by Figs. 2 and 3, are arranged in a common vessel *n*. This vessel is subdivided by partitions o into separate compartments. By means of separate auxiliary electrodes *p* introduced into the chambers and to which an illuminating potential can be applied in the same way as to the grids of the circuit arrangement of Fig. 1, the negative blue glow can be produced separately in the individual chambers.

Figs. 4 and 5 show an arrangement in which the relay has a large number of actuating members, which themselves act as indicating members. These actuating members consist of separate small rods *t* movable in brass tubes *s* or similar guides, between the two poles *q* and *r* of an electromagnet. Here, the travel of the rods *t* is so limited by the ends of the guides *s* that the rods are, in both terminal positions, closer to the one pole *q* of the electromagnet. If, consequently, the electromagnet is energised on the arrival of the echo, the rods *t* which consist of ferromagnetic material are always more strongly attracted by the pole *q* than by the pole *r*. This holds good for all the rods *t* arranged in the circumference of the magnet with only one exception. Between the rod guides *s* and the further magnet pole *r*, there rotates continuously with uniform velocity a piece of soft iron (pole piece *u* for *r*), corresponding approximately to the size of one of the rods *t*. By means of this piece of soft iron, the distance of the rod *t*, which is at the position in question, from the magnet pole *r* is, contrary to all the other rods, smaller than the magnet pole *q*, so that this one rod is attracted to the opposite side to all the other rods. In the guides *s* are formed radially extending apertures *v* behind which is a source of light *w* extending round and continuously illuminating the whole circumference. As can easily be seen, the luminous opening *v* is always only left free by that rod *t* which at the instant of the arrival of the echo is opposite the revolving piece of soft iron *u*, vide rod *t* in Fig. 4 at the top.

To strengthen the action, there could if necessary be allocated to the revolving pole piece *u* a further ring-shaped pole piece revolving in front of the other magnet pole *q* and having a gap at the position of the pole piece *u*.

The rods *t*, since they are all carried hori-

zontally, remain by their own weight in the fresh position produced by the echo impulse until the next echo arrives. If necessary, further separate braking devices could be provided in order to ensure the terminal position at any time reached by the rods *t*. There is also provided for observing the luminous beams which are radially directed outward through the openings *v*, an annular mirror *x* inclined at 45°, which deflects the rays of light from the radial direction through 90° into the axial direction.

It is furthermore also possible to use the rods *t* of the arrangement according to the Figures 4 and 5, not as light baffles but as actuating members which switch on and off the current circuit releasing the indication. Fig. 6 shows an example of this where the relay, for the sake of clearness, is shown developed. In this case a suitable potential is applied to each rod or actuating member *t*, for example through a potentiometer *y*, and in such manner that the lowest potential is applied to the actuating member or rod in the zero position, and to each subsequent one a regularly increasing potential. Instead of rods, levers can be used which can be drawn through an unstable central position towards one or other terminal position. There is here used as the indicating member a voltmeter *z* which is preferably strongly damped, and has a small natural oscillation period but which need not be of great ohmic resistance. If this voltmeter, as in the example illustrated, is made in the form of a pointer instrument, it is advisable for steadying purposes to arrange a condenser in parallel with the voltmeter.

The improved appliance is particularly suitable for use as a landing altimeter for aircraft since it is distinguished by an especially simple and easy construction and ensures the continuous indication specially desired by aircraft. But the improved process and the device can also be used with advantage in combination with other echo sounding installations. The circuits according to Figs. 1, 2, 3 and 6 have the further important advantage that they permit the separation of the time-giving mechanism and the actual indicating appliance, so that only the actual indicating appliance need be fitted at the observation post, whilst the time-giver can be mounted at any other position more favourable for operation and space utilisation.

Fig. 7 shows a modified form of the relays used in the arrangements according to Figs. 4 to 6. In this embodiment a supplementary winding *w1* and *w2* is provided through which a continuous current flows and a polarisation is attained in order to ensure a secure holding of the actuating members in their terminal positions. Furthermore, with this embodiment, there are provided two separate magnetic circuits. The relay consists of an inner circular magnet of double-T-shaped cross-section and an outer magnet of U-shaped cross-section annularly surrounding the former. The windings *w1* and *w2* have a magnetising action in such sense that like poles of the two magnets are opposite each other. The actuating members *t1* are oscillatably carried between the two North poles in such manner that they lie in one terminal position in the circuit of the inner magnet, and in the other terminal position in the circuit of the outer magnet. In order to attain a good magnetic closed circuit and a powerful attractive action on the oscillatable armatures *t1* there are provided between the poles of the inner and outer magnets ring-shaped magnetic closure members *l* and *j* respectively. These members are of different length, so that in the range of oscillation of the armatures *t1* there are air gaps of different length. There are provided on the two magnetic closing members, windings *s1* and *s2* which are excited by the echo impulse to the same extent and in such manner that they assist the windings *w1* and *w2* of the corresponding magnetic circuit. In front of the magnetic closure member *l* of the outer magnet there revolves with uniform velocity a piece of soft iron.

The armatures *t1*, as is clearly seen, can only be held in the two terminal positions, since in the central position shown on the drawing they assume an unstable equilibrium and by the magnetic attraction of the two magnets are either attracted inward or outward. Let it be assumed that all the armatures are located in the circuit of the inner magnet. On the arrival of an echo impulse, all the armatures will remain in their inner position. Only the one armature which is just opposite the revolving piece of soft iron *u1* will be drawn out of its inner position into the circuit of the outer magnet. It also remains in this position, since the polarisation of the outer magnet suffices to retain the armature in its position. On the next echo impulse, however, the attractive force of the inner magnet suddenly preponderates in such manner that the armature is again drawn back into the circuit of the inner magnet, assuming that the rotating piece of soft iron is this time in some other position.

The polarisation could alternatively be obtained by the use of permanent magnets instead of by supplementary windings *w1* and *w2*. It would also be possible to combine the two ring-shaped closure members *l* and *j* into a single closure member and to cause the piece of soft iron of the time-giving member to rotate between the poles of the two magnets as with the embodiments according to Figs. 4, 5 and 6. Furthermore, instead of oscillatable armatures, displaceable armatures could be used. The arrangement of oscillatable armatures has, however, the advantage that with the arrangement of a weight-equalising counterpoise arm, the influence of gravity on the position of equilibrium can be entirely excluded, so that the arrangement works properly in any desired position (arrangement in the centre of gravity). The counterpoise arms can, as shown in the embodiment illustrated, be provided with vane-like bent parts which can be used directly as indicating members and can cooperate with a suitable circular scale. If it is desired not to mount the relay with the time-giving member and its drive at the observation position, the relay, on account of the contact pressure attainable, is nevertheless also suitable to a special extent for the remote control of the actual indicating device, the armatures *t1* being used as switching members for electric current circuits in a manner similar to that shown in Fig. 6.

The difference of the magnetic forces acting on the relay members, instead of being attained by different widths of the air gaps, can also be attained by correspondingly different construction of the magnet windings *w1* and *w2* or, if a preponderance of the magnetic force in one or other direction is only desired for the instant of the echo impulse, by different construction of the windings *s1*, *s2* traversed by the echo impulse. The necessary difference in the ampere turns can obviously also be attained by a different current

distribution instead of by a corresponding number of turns.

In particular with aircraft echo sounding double echoes which interfere with the indication frequently occur as a result of multiple reflection between the wings and the surface of the earth. To prevent such double or other interfering echoes following the first useful echo from suppressing the true indication and being themselves indicated, a device is provided which is actuated by the first echo arriving after the emission of the sound and makes the indication of the subsequent echoes impossible until a fresh sound emission. This may be obtained, for example, by a relay actuated by the first echo which switches out the amplifier of the echo sounding device. This relay must only be reconnected on the next emission of sound. In this way, the result is attained that an indication of the first echo is not affected by further double or interfering echoes, which is naturally of special importance in connection with the present continuous indication method.

Naturally, the invention is not restricted to the examples shown, but many modifications and other designs are possible. In particular, instead of the light indication, an indication could be given by mechanical members such as tongues, pointers or the like. In the embodiment according to Figs. 4 and 5, instead of interposing a soft iron pole piece, a preponderance of the magnetism on the one side could also be attained in a different way, e. g., by a permanent magnet or by an electromagnet excited by the echo impulse.

Using the potential method according to the example illustrated in Fig. 6, the potential given by the potentiometer to the voltmeter at the instant of the echo impulse could be retained by a single condenser connected in parallel with the voltmeter instead of by a special relay contact. A relay with a number of movable contact members corresponding to the number of the desired indication values would then no longer be necessary, but a normal relay could be used, the moving contact member of which on deflection would apply the potential controlled by the time-giving member for a short interval of time to the condenser in parallel with the voltmeter until this has taken up a charge corresponding to the new potential and has then again returned into its initial position. It is possible to use a condenser which is so large that its potential does not appreciably vary in the interval of time between two echoes due to the load caused by the voltmeter. Preferably a high ohmic voltmeter is used.

ROBERT WELLENSTEIN.

PUBLISHED
MAY 18, 1943.
BY A. P. C.

R. WELLENSTEIN

MICRO CHRONOMETER, IN PARTICULAR FOR LANDING ALTIMETERS ON AIRCRAFT FOR MEASURING THE ALTITUDE BY MEANS OF SOUND WAVES BY THE ECHO SOUNDING METHOD

Filed June 12, 1939

Serial No. 278,776

FIG. 1.

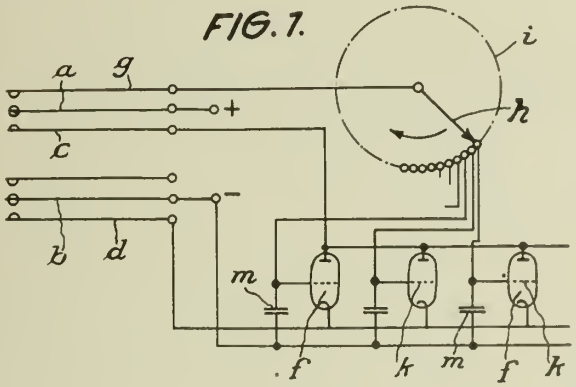


FIG. 2.

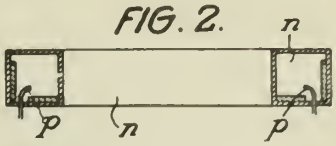


FIG. 3.

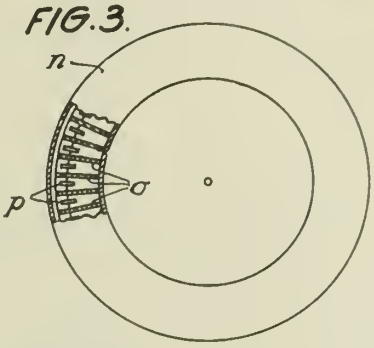


FIG. 4.

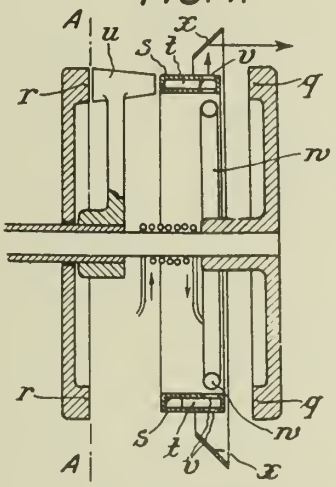


FIG. 5.

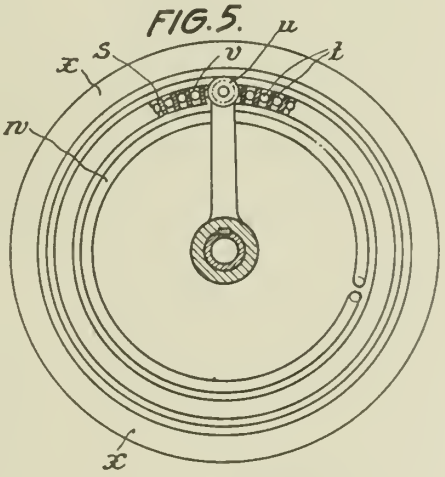


FIG. 6.

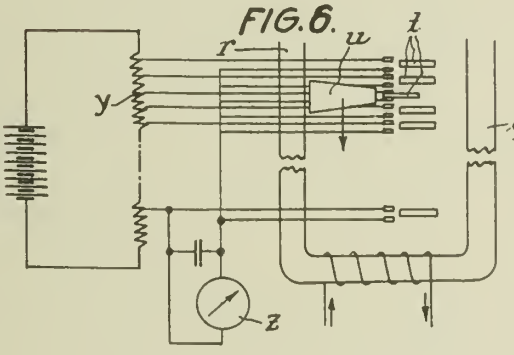


FIG. 7.

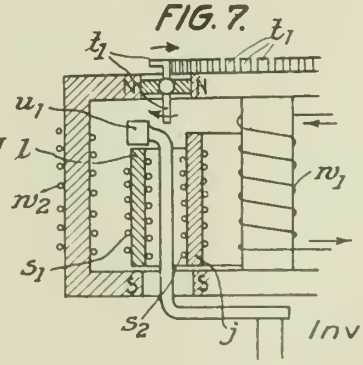


Inventor,
R. Wellenstein
By:
Glascock Downing & Seebold
Attorneys.

Published May 18, 1943 Serial No. 279,576

# ALIEN PROPERTY CUSTODIAN

## FILM MAGAZINES AND CONTAINERS

Rudolf Taesler, Dresden-A, Germany; vested in the Alien Property Custodian

Application filed June 16, 1939

This invention relates to improvements in film magazines and containers.

An object of the invention is to provide a film magazine in which the film coiled on the reel is prevented from loosening these coils during storage or transportation of the magazine.

Another object of the invention is to provide a film magazine with a storage casing for the magazine and to maintain in association with the storage casing means for preventing the film reeled up in the magazine from changing its position on the reel.

It is an object of the invention to provide a film magazine with means for preventing the coils of the film on the reel from loosening themselves during storage or transportation, while at the same time maintaining the volume or interior space of the magazine of about the same order as that interior space of a magazine in which no such means are provided.

It is another object of the invention to provide in association with the outer casing of a film magazine means for entering the film magazine and to apply friction enhancing material on said entering means.

Another object of the invention is to provide in association with an outer casing for a film magazine means which extend into the interior of the magazine itself and which engage film reels stored in said magazine so as to prevent said reels from changing the position in which they have been placed at the time the magazine was charged.

With these and other objects in view, a plurality of embodiments of the subject matter of the invention have been shown in the accompanying drawings to which reference is made in the following specification.

In the drawing:

Fig. 1 is a horizontal section through a film magazine and its outer casing.

Fig. 2 is a top plan view of the outer casing.

Fig. 3 is a fragmentary sectional view through an element adapted to lock the film reel within the magazine against rotation.

Fig. 4 is a top plan view of the fragment shown in Fig. 3;

Fig. 5 is a fragmentary sectional view through the wall of a modified casing having means for preventing rotation of a film reel within a magazine surrounded by said casing, and

Fig. 6 is a top plan view of said last named embodiment.

The magazine 1 may be of any suitable shape or material for insertion into a camera. In the embodiment illustrated, the magazine 1 is shown as having elongated therefrom for receiving in its interior two film reels 2, 3 which are maintained in a predetermined location within the magazine 1 by means of pins 4, 5 respectively entering the center openings 20 of the film reels, said centering or locating pins 4 and 5 advisably being riveted to the wall of the magazine 1 or being fixed thereto in some other suitable way.

In axial alinement with the opening 20 in one disc of each reel there is provided an axial opening 21 in the opposite wall of the reel in a manner well known in the art.

The magazine 1 with the reels 3 and 4 located therein by the pins 4 and 5 is hermetically closed, and in this condition it is insertable into the camera for which it is intended. The means for acuating one or both of said film reels do not form part of the present invention and are not illustrated in the drawing.

The magazine 1 is maintained in stock and furnished to the user while it is enclosed within an outer casing 6 which may be of suitable material, stiff cardboard, sheet metal or the like, and which is provided with a pin 7 in such relation to the magazine 1 enclosed by said outer casing 6 that said in 7 is in axial alinement with the locating pin 5 riveted to the casing. This pin 7 projects through the opening 21 of the magazine and also through the opening 8 in the reel 2 in the interior of the magazine. It is this element 21 projecting from the outer casing 6 into the interior of the reel 2 which during storage and transportation prevents said reel from turning about its axis and thereby also prevents the coils of film wound on said reel from becoming loose for any reason whatsoever.

The outer casing or container 6 for the magazine preferably is provided with a cover 9 which may be secured to the body of the outer container or casing 6 in any suitable way, as indicated by the fastening means 17 diagrammatically shown in Fig. 1, and this cover 9 also is provided with a companion pin 10 for the pin 4 projecting from the wall of the casing 1 into the interior of the reel 3. This companion pin 10 projects through the opening 20 in the casing into alinement with the locating pin 4 for the reel 3.

The openings in the reels through which the pins 7 and 10 respectively project, normally are square openings, and the pins 7 and 10 locking the reels 2 and 3 against rotation within the magazine also may be advisably of a formation in accordance with the shape of the openings 8 and

11 respectively of the reels. In order to safeguard to a higher degree even against accidental movement of the reels on the locking pins 7 and 10, the locking pins may be provided with frictional coatings, as indicated at 22 and 23 respectively. It is further apparent from Fig. 1 that the locking elements 7 and 10 mounted on the outer casing 6 for the retention of the reels 2 and 3 against rotation may be of conical shape so as to facilitate the insertion of these locking elements into the reels 2 and 3 in the interior of the magazine 1.

In Fig. 3, the cover 9 of the outer casing only is shown as being provided with a tongue 12 partly punched from the material of which said cover is made and then deflected from the plane of said cover so as to enter the opening in the reel. Since this tongue also engages the opposite edges of the square opening in the reel, rotation of said reel about the axis of the locating pins 4 within the magazine cannot take place.

In Fig. 5 a similar embodiment of the cover 9 of another casing is illustrated as being provided with a plurality of tongues 13 to 15 punched from the material of the cover 9 and then deflected from the plane of the cover, and in such relation to each other that they upon insertion of the ends of these tongues into the openings 11 or 8 respectively of the reels will lock said reels against rotation in the interior of the magazine.

While in Figs. 3 to 6, the cover 9 only of the outer casing is shown, it is obvious that the opposite wall of this outer casing, not shown, is provided with a locking element adapted for holding the other reel within the casing against rotation similarly to the showing made in Figs. 1 and 2.

It is, furthermore, obvious that an outer casing may enclose a plurality of magazines side by side with the reels located in each magazine similar to the manner indicated in Figs. 1 and 2. The outer casing may then be provided with a plurality of locking elements adapted for cooperation with the locating elements within the magazines to enter said magazines and hold the reels therein against rotation.

It is also obvious that in outer casings a plurality of magazines may be stacked on top of each other with locking elements of the character described in the above specification forming part of partition walls inserted between each two superimposed magazines.

It is also feasible to provide an outer casing in which locking elements for holding the reels in the interior of the magazine against rotation may be inserted, for instance, by piercing the wall or cover respectively of the magazine, in which case the magazine may be provided with indications showing to the user where these locking elements should be inserted.

The locking elements illustrated in Figs. 1 and 2 entering the magazine and reels from the outer casing or cover respectively also are provided with a coating which will prevent the entry of light into the interior of the reel.

It will be noticed that in the present invention the reels fixedly located in the magazines are additionally locked against rotation and that in spite of these additional locking means, no springs or other holding means acting upon the circumferential edge of the reels or film are necessary.

RUDOLF TAESLER.

PUBLISHED
MAY 18, 1943.
BY A. P. C.

R. TAESLER
FILM MAGAZINES AND CONTAINERS
Filed June 16, 1939

Serial No.
279,576

Fig. 1

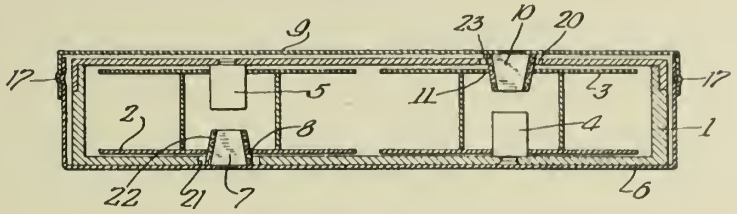


Fig. 2

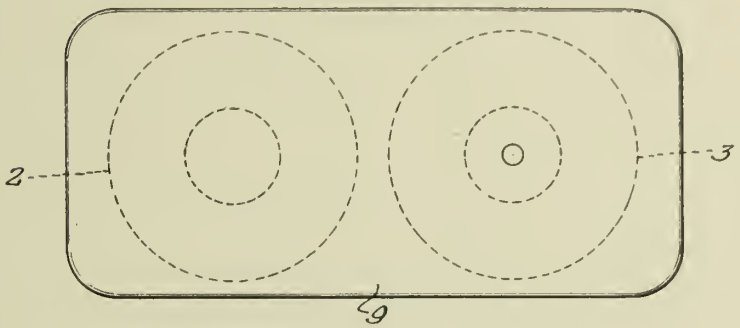


Fig. 3

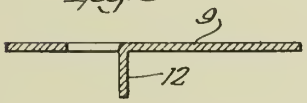


Fig. 5

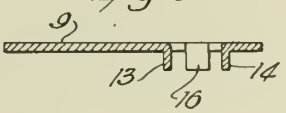


Fig. 4

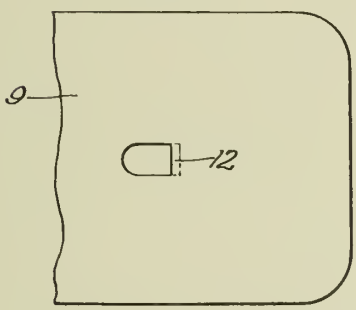


Fig. 6

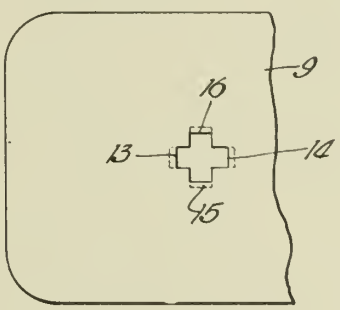


Inventor:
Rudolph Taesler
By: B. Singley
A. Stern.
Attys:

Published May 18, 1943 Serial No. 280,094

# ALIEN PROPERTY CUSTODIAN

## FILM SCANNING DEVICE

Johannes Küffer, Berlin, Germany; vested in the Alien Property Custodian

Application filed June 20, 1939

In the art of television all mechanic means for scanning a film scan an area the geometric form of which does not coincide which that of the film image.

If, in the simplest case, a scanning drum is used the image of its cylindric surface projected by a lens on the plane of the film is also cylindric and therefore not sharp on its entire extension. The same fault arises in the case of a mirror drum and of other similar means used for scanning. It makes, of course, no difference whether the apertures of the scanner are lighted and projected on the film or vice versa.

Another case is that of a Nipkow disc. The scanned area is a trapezium and the scanned lines are arcs. This "Keystone Distortion" is particularly noxious for interlaced scanning, as well known.

It is the object of the invention to avoid the described optic faults in a simple manner by imparting to the film, when passing the film gate, a slightly crooked cross-section.

The invention is illustrated in the accompanying drawings in which

Fig. 1 is a side view of the general arrangement of the film gate and the guiding rollers.

Fig. 2 shows the said rollers,

Fig. 3 is a cross-section through a scanning arrangement using an apertured drum.

Fig. 4 shows the application of the invention in the case of a Nipkow disc, and

Figs. 5–8 serve for explaining the effect of this arrangement.

In Fig. 1, 1 is the film which is conducted by the rollers 2, 5—6, 15—16 and 4 through the film gate 3. As shown by Fig. 2, the rollers 5—6, and also the rollers 15—16, are so shaped as to impart to the film a slightly crooked cross-section, and the form of the film gate 3 (see Fig. 3) is also adapted to keep the film in the same crooked condition.

Fig. 3 shows the effect of the described measure in the case of a scanning drum 7 having apertures 17 which may be lighted by a light source 9. The surface of the drum is projected by a lens 8 on the film gate 3. The projected image is, as well known, also cylindrically curved at a radius which depends on the scale of the projection. According to the invention the film 1 is crooked at a radius equal to that of the projected image so that the optic failure is avoided.

When the scanning is perfected by means of a Nipkow disc 13 (Fig. 4) the film gate 3, according to the invention, has to be arranged inclined at an angle $\alpha$ to the optical axis 11—11 and the projecting lens 2 at an agle $\beta$ which is practically equal to $\alpha/2$. The film 1 is crooked as described above. The effect of this arrangement will be described on hand of Figs. 5 to 9.

Fig. 5 shows a flat film 1 (cross-section Fig. 6) carrying rectangular images. If now the same film is crooked (Fig. 9) and inclined at an angle $\alpha$ (Fig. 7) and observed in the direction of the arrow 12, it looks as shown by Fig. 8. The horizontal edges 13 of the images appear now curved. By properly choosing the crookedness of the film and the angle $\alpha$ it is easily to obtain that the curvature of the lines 13 is equal to the curvature of the scanning track of an aperture 17 projected on the film. At the same time, by the inclination $\alpha$ of the film, the keystone effect is completely compensated.

If the scanning drum or disc is provided, instead with simple apertures, with lenses, the proportions described above have to be adapted in an obvious manner.

JOHANNES KÜFFER.

PUBLISHED
MAY 18, 1943.
BY A. P. C.

J. KÜFFER

FILM SCANNING DEVICE

Filed June 20, 1939

Serial No.
280,094

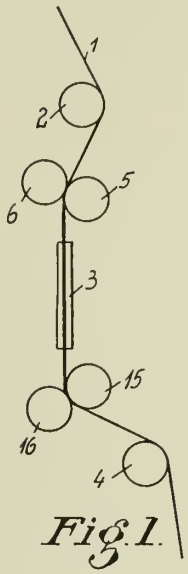


Fig. 1.

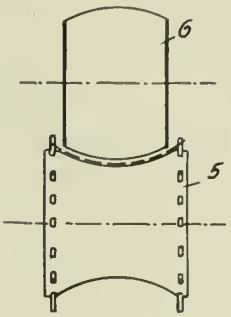


Fig. 2.

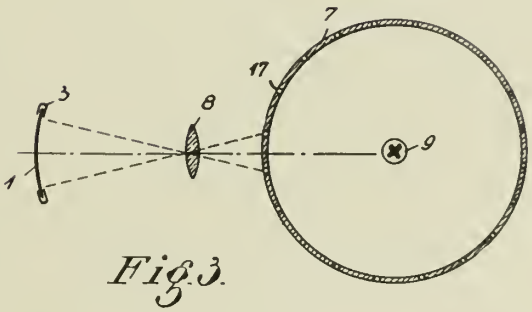


Fig. 3.

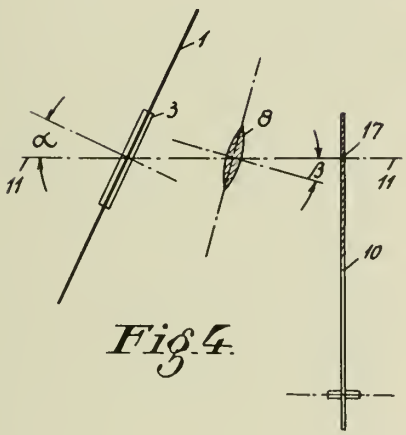


Fig. 4.

Fig. 5.

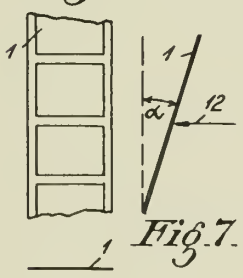


Fig. 7.




Fig. 6.

Fig. 8.

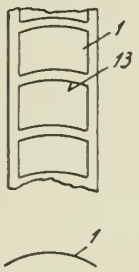


Fig. 9.

Inventor:
Johannes Küffer

Published May 18, 1943 Serial No. 281,313

# ALIEN PROPERTY CUSTODIAN

## APPARATUS FOR GENERATING ELECTRICITY

Leon Ladislas de Kramolin, Berlin-Kladow, Germany; vested in the Alien Property Custodian

Application filed June 27, 1939

The present invention relates to an arrangement for generating electricity by means of high speed driving machines, and more particularly to the generation of direct current with the aid of such machines.

It is known that various machines can be constructed particularly favourably when they can be designed for high speed running. This applies for example to steam turbines and internal combustion (explosion) turbines. On the other hand in connection with the generating of current with the aid of electric generators, certain limitations are existant as regards the speed capable of being employed. If alternating current is to be generated the maximum speed of the turbine is fixed at 3,000 revolutions per minute by the generally usual periodicity of 50 cycles per second. If direct current is to be generated no such limitation is directly existant, but difficulties are encountered in connection with the designing of the commutators if it is desired to build for extremely high speed.

On the other hand, it is known that it is highly desirable to have high speeds available for obtaining high frequency current by means of machines. No limit is imposed as regards the attainable speeds by any particular structural difficulties in connection with these machines, apart from the general stresses due to centrifugal force, since the machines may be so constructed in known manner that there are no portions of windings at all on the rotor with the result that the limits of speed set for them are no lower than for the driving machine.

The high frequency current thus obtained can then be converted, by rectification, into direct current of any desired voltage, since, owing to the fact that all the winding parts, or at least those traversed by high frequency current, are stationary, it is readily possible to provide for great voltage intervals within the machine itself, without giving rise to insulation difficulties; while on the other hand, in the event of the desired voltages being too high or too low to be produced in a favourable manner in the machine itself, the high frequency current generated may also be transformed in a simple manner. The transformers are for this purpose light and inexpensive while at the same time adjustment of the output voltage may be varied within wide limits by alteration of the amplitude, frequency or phase of the high frequency currents. If desired it is also possible to achieve an increase or reduction of frequency in these transformers, by the principle of the known stationary frequency converters, and regulating may be effected by tuning operations or by detuning of circuits, during this frequency transforming step.

If relatively high frequencies are to be produced, which may be of advantage from various points of view, it is possible in accordance with the principle of the known Goldschmidt high frequency machines, to utilise a plurality of rotary fields in the machine which rotate partly counter to and partly with the mechanical rotary movement, so as to provide high frequencies despite relatively small pole divisions. By rectifying the high frequency current there is then obtained a direct current the voltage of which can be varied within very wide limits by the above indicated methods, so that the appropriate altering of amplitude, frequency or phase for purposes of voltage regulation is particularly well suited as means of starting up and regulating current consumers designed to work with greatly fluctuating voltages. Current consumers of this kind are, for example, traction motors which should be capable of being fed with voltages varying within wide limits for the purpose of regulating the speed of the vehicle.

Although in the great majority of cases the invention will be used to produce direct current to feed the motors or other current consumers to be operated, since the direct current motor when appropriately designed combines the advantage of extremely high starting torque with a high degree of speed regulability, yet on the other hand the possibility is not precluded of generating, where desired, alternating currents of technical frequencies by means of this invention. By a mere regulating step with the aid of one of the numerous regulating circuit arrangements known in connection with the designing of high frequency transmitters, it becomes possible, with the aid of a relatively small impulse controlling or generating means, to impose by modulation on the high frequency current, either as it is generated in the machine or at a subsequent transforming stage or at any other suitable point, an alternating voltage which may then be subsequently obtained by rectification of the high frequency current.

Thus, either direct current or alternating current may be obtained from the high frequency current by rectification, or alternatively both kinds of current may be obtained concurrently by only modulating a part of the high frequency current generated, so that in this case one and the same plant may be used for generating several kinds of current, say a plurality of alternating

currents of different frequency and number of phases.

The frequency converters for this purpose may be provided, in accordance with the principle of the known frequency transformation, with grid-controlled discharge vessels which in their turn may be vacuum vessels. As compared with frequency transformation with technical alternating currents which, unless very complicated circuit arrangements are used, invariably have a considerable higher harmonic component, practically waveless direct currents or purely sinusoidal alternating currents may be generated in accordance with the present invention since the high frequency current constituting the starting point for generating direct currents or alternating currents of lower frequency is practically completely filtered out by means of very economically dimensioned filters or even by the capacity and self-induction of the leads and consumer units at the output.

As already pointed out above, the arrangement according to the invention is particularly suitable for operating vehicles. Attempts have been made at various times to use turbines for driving locomotives. Owing to transmission difficulties, that is to say generally owing to difficulties in connection with gearing, the experiments hitherto made in this direction have not for the most part given satisfactory results. The recent tests by the German State Railway with the hitherto known principles of designing turbine locomotives have likewise been unsatisfactory owing to difficulties encountered in connection with the reduction gearing.

By employing, however, turbo-electric operation with the generation of high frequency current, involving the use of a high speed turbine (which is in itself easy and inexpensive to produce) to drive a high frequency generator, it becomes possible, by the combination of a high speed driving machine with a high frequency generator (which likewise calls for very high speeds in contrast to other technical current generators), to achieve a very considerable simplification and reduction of cost and also a saving of weight. At the same time, by using the means mentioned above, the possibility is provided of varying the voltage of the secondary output, with low losses, in an extremely simple manner within unrestricted practical limits. This means that all gearing difficulties are avoided, since the direct current driving motors, which are preferably used, render gearing superfluous by the mere fact that the operating voltage can be varied while allowing the high speed turbine to work at constant speed.

Voltage regulation may be effected by varying either the amplitude of the phase or the frequency of the high frequency alternating current generated (the term "high frequency" is to be understood to apply to all frequencies between the medium frequencies of the audible range up to the highest frequencies capable of being produced in an economical manner).

The alteration of phase or frequency for the purpose of obtaining a controlling action is conveniently effected by alterating the inductance with the aid of pre-magnetisable inductances having iron cores. To obtain particular results, for instance with a view to compensating any effects due to fluctuations in the operation of the driving machines, a plurality of the said three types of controlling action may be combined. Furthermore, regulation of the energy transmission between the input and output systems may also be effected by providing one or more secondary windings of a transformer or of transformers, which may for example be fixedly tuned for certain conditions of operation, and which supply their voltage, generally through rectifiers, to the useful current consumers, and by arranging for the speed of the machine to be variable within relatively narrow limits.

The maximum voltage is then fed to the consumer or consumers when the frequency generated by the machine is exactly the same as the inherent frequency of the secondary system or systems. If the tuning is upset, by slight alteration of the speed of the machine, i. e. by acceleration or deceleration of the machine, the energy output falls off and thus with the aid of quite slight alterations in the speed of the driving machine it becomes possible to obtain very extensive regulation of the voltage fed to the consumers and thereby to effect a very great change in the speed of any driving motors connected in the consumer circuit.

This mode of regulating the speed of driving machines is not restricted to the use of high frequencies, but is achieved at any frequency, although when high frequencies are used the tuning to certain frequencies requires very much less complicated means. On the other hand the speed of the machine may be kept constant and the tuning of the secondary system or systems varied by altering the inductance of these circuits, for instance by varying the degree of pre-magnetisation of any available coils having cores containing ferro-magnetic material.

It would of course also be possible to effect tuning by alteration of capacity, but in many cases it appears to be preferable to adopt the inductive tuning according to the said method, since inductances containing iron are generally present in some form or other, as transformers or otherwise. In cases in which direct controlling of these pre-magnetising currents by means of regulators or the like is undesirable, these currents may be pre-amplified by means of valve amplifiers or magnetic amplifiers.

The accompanying drawings show by way of example only, three embodiments of the present invention in Figs. 1 to 3 whilst Fig. 4 illustrates the invention as applied to a railroad vehicle.

Referring now to the drawings wherein like references refer to like parts, in Fig. 1, a turbine, indicated by the reference numeral 1, is coupled to an alternator 2, generating high frequency currents. The output terminals, 3, 3', are connected to the primary winding 4 of a high frequency transformer T, having a secondary winding 5 centre-tapped at 6. The windings may be arranged so that their coupling may be varied, or the magnetisation of one or both may be varied, for example by being wound on compressed ferro-magnetic dust cores disposed in the magnetic field of a magnet, the strength of which is varied by varying the strength of a current flowing through windings on the magnet poles. In addition or alternatively to such variable means, a variable condenser 7 may be provided, connected across the secondary windings, the purpose of which will become evident later. The extreme ends of the secondary winding are also connected to the opposite halves of a full-wave rectifier indicated diagrammatically at 8.

A D. C. motor 9, constituting the power consumer, has one input terminal connected to the centre tapping 6, and the other to the common

electrode of rectifier 8. Preferably a condenser 10 is connected across the terminals of the motor.

The generator 2, may be provided with permanent magnets or its magnets may be excited from a separate source of direct current (not shown), or may be derived from the output of the rectifier 8 and applied to terminals E on the generator 2.

In operation, the high frequency currents generated by the alternator 2, are fed to the transformer T and rectified by the rectifier 8. The resulting rectified current is applied to the motor 9 which is driven thereby.

The speed of the motor may be controlled by varying the coupling between the windings of the transformer T, by varying the magnetisation of the cores of the windings, by varying the capacity of the condenser 7 and thereby varying the frequency of the resonant circuit formed by the condenser and the secondary winding of the transformer, or by a combination of two or more of these methods.

In the foregoing embodiment, the speed of the motor is controlled by varying the amplitude or the frequency of the generated high frequency currents. In Fig. 2 an arrangement is illustrated whereby the speed is controlled by varying their phase. In this embodiment, the rectifier comprises a grid controlled full-wave rectifier tube 11, having the cathode connected to one terminal of the motor 9 whilst the opposite ends of the secondary transformer are connected to the anodes 12, 12'. A phase shifting device 13 is connected in the grid-cathode circuits of the two halves of the rectifier, whereby a current is derived fluctuating in accordance with the generated current, which derived current is impressed through an inductive coupling 14, onto the secondary winding of the transformer T. By varying the phase shifter the derived current may be caused to give rise to a positive or negative regenerative coupling effect, and thereby augment or diminish the current applied to the rectifier, and consequently to the motor.

The two embodiments already described include direct current motors, but the invention may also be utilised for driving and controlling an alternating current motor as illustrated in the embodiment shown in Fig. 3.

In Fig. 3, a variable oscillator 15 is shown comprising a tube 16 having its anode inductively coupled to the grid circuit comprising an inductance 17 tuned by variable condenser 17 connected in parallel. The anode current of the tube may be obtained from a direct current motor 18, preferably driven from the shaft of the generator 2, through reduction gearing or from the rectified output of the high frequency generator 2. The oscillator 15 generates medium or low frequency currents which are superimposed upon and modulate the high frequency current.

This modulated current is demodulated by the rectifier 8 and the alternating current motor 19 is then driven by the resulting fluctuating current. Regulation of the alternating current motor 19, may then be effected by varying the modulation. If desired, a rectifier and condenser may be provided in the output circuit of the oscillator as indicated by the dotted lines, whilst the alternating current may be further regulated by any of the means described with reference to the preceding two embodiments.

When the method according to the application is employed in connection with steam train traction the arrangement may be as shown in Fig. 4 given by way of example, that the vehicle otherwise used as a locomotive serves solely for raising steam, while the vehicle otherwise used as a tender carries the generator and the regulating and/or transforming apparatus (rectifiers and the like), if such be provided. The rectified direct current may then either drive motors mounted on the tender or on the locomotive frame, or alternatively, as would appear to be more favourable from the point of view of running characteristics and performance, each truck or carriage of the train, which also carries load, or merely some of them, or all the constituent vehicles of the train without exception, may be equipped with their own driving motors. All these motors receive their voltage from the transformer provided on the tender by virtue of rectification, the voltage generated being capable of variation, by the above-mentioned alteration of tuning, continuously from zero up to a maximum value, so that the speed of the motors in all the driving vehicles can be controlled simultaneously.

When the alteration of tuning is effected, as indicated above, by changing the inductance by varying a pre-magnetising current, the pre-magnetising current conductor may be taken through all the carriages or trucks in the form of a ring conductor, and in this case the whole train may be controlled from any one carriage or truck, which is particularly advantageous since the train may then travel in either direction without reversing the position of any of its parts. For the purpose of this speed control, means would then naturally have to be provided for reversing the direction of flow of the current and for applying a braking action, for the purpose of enabling the train to travel backwards and to be brought to a standstill. If, as is stated above to be one of the possibilities, the secondary side be detuned for the purpose of altering the voltage, steps must be taken, if this is to be the sole possibility of controlling, to ensure that the driving machine itself, that is to say in the present case the turbine, runs at practically constant speed. Resonance phenomena may be utilised in a simple manner for the fulfilment of this requirement also. For this purpose, the procedure may be similar to that employed at the present time in connection with the automatic sharp tuning of the receivers used in wireless communication. For example, two tuned circuits, quartz oscillators or the like which are slightly out of tune with each other may be provided, the respective inherent frequencies of which are slightly above and slightly below the frequency corresponding to the nominal speed of the machine. If this provision entails unfavourable dimensions, it is also possible to use a higher harmonic of the machine or of the said two oscillators, or alternatively a suitable frequency ratio may be selected in a subheterodyne or superheterodyne arrangement. These two watching circuits or watching quartz elements or the like respond to an equal extent when the speed of the machine is at its nominal value. When the speed of the machine changes, either the watching oscillator corresponding to the higher frequency or that corresponding to the lower frequency responds to a greater extent, and a steam throttle, braking device or the like differentially influenced by the two oscillators is thereby brought into operation to re-establish the normal speed, or to alter the inherent frequency of the secondary part or parts of the transformer through the action of a tuning device (for instance again a pre-magnetis-

able inductance) in the same sense, whereby the mutual tuning or the degree of mutual tuning is maintained. This mode of speed regulation, which may if desired be combined with other known mechanical speed governors, may be used in connection with any type of machine the speed of which is to be kept constant. It is applicable however with particular advantage when, as in the present instance, alternating current and particularly alternating current of a high frequency, is generated by the driving machines concerned.

LEON LADISLAS DE KRAMOLIN.

PUBLISHED
MAY 18, 1943.
BY A. P. C.

L. L. DE KRAMOLIN

APPARATUS FOR GENERATING ELECTRICITY

Filed June 27, 1939

Serial No. 281,313

2 Sheets-Sheet 1

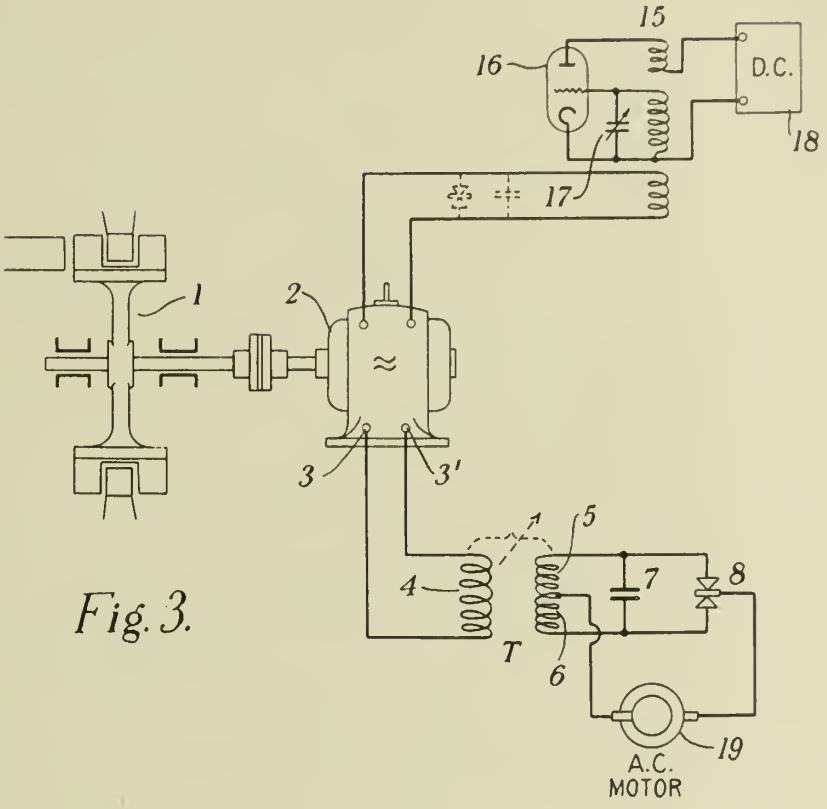


Fig. 3.

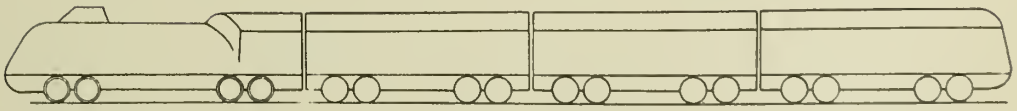

Fig. 4.

Inventor
Leon Laszlas de Kramolin

PUBLISHED
MAY 18, 1943.
BY A. P. C.

L. L. DE KRAMOLIN

APPARATUS FOR GENERATING ELECTRICITY

Filed June 27, 1939

Serial No. 281,313

2 Sheets-Sheet 2

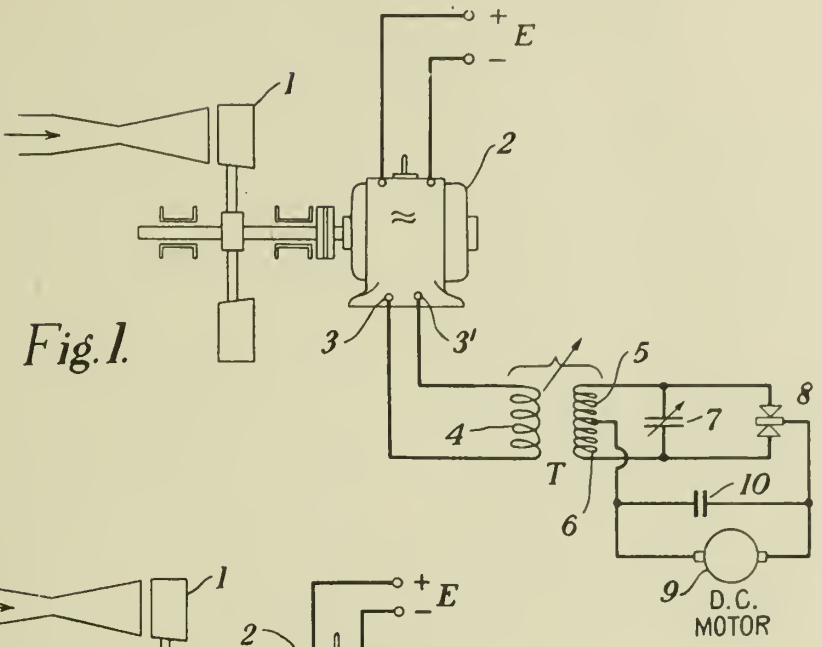


Fig. 1.

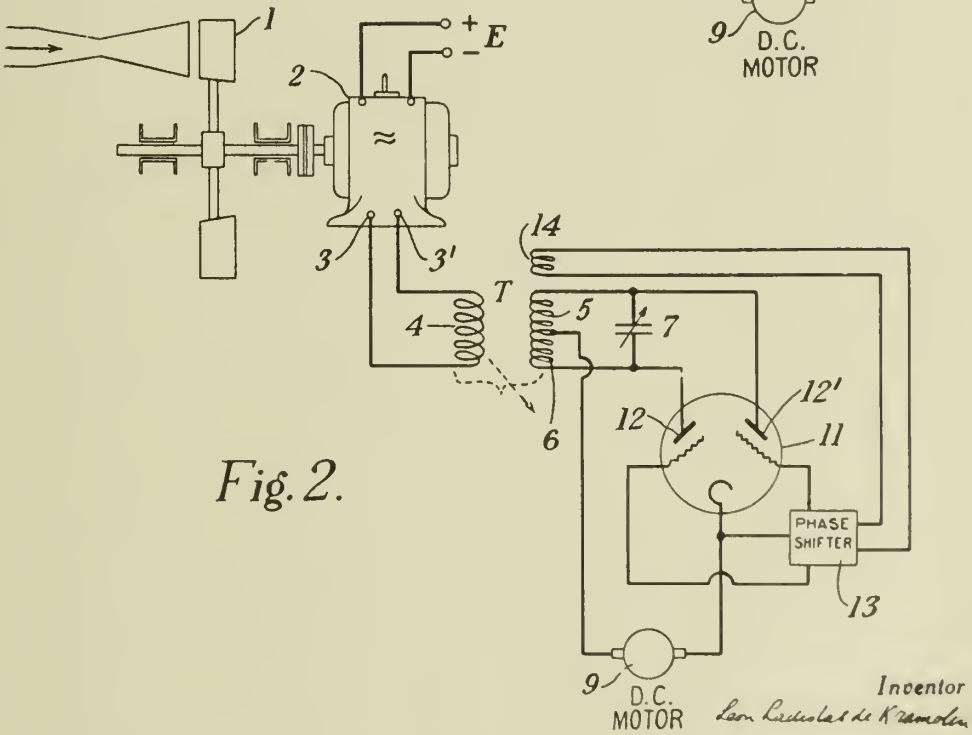


Fig. 2.

Inventor
Leon Lucien de Kramolin

Published May 18, 1943 Serial No. 281,718

# ALIEN PROPERTY CUSTODIAN

## PROCESS AND APPARATUS FOR OBTAINING GLYCERINE FROM DISTILLERY SLOPS OR SPENT WASH

Ernest Königstein, Malacky, Slovakia; vested in the Alien Property Custodian

Application filed June 28, 1939

The slops or spent wash arising in the industrial production of spirit by fermenting crude sugar and sugar-containing raw substances, more particularly beet, contains a not inconsiderable quantity of glycerine. The processes heretofore proposed for obtaining this glycerine are satisfactory neither technically nor economically since they necessitate amongst other things extensive purification, not only physical but chemical as well, and clarification, of the spent wash being worked up, these operations having to be carried out in costly and expensive plants.

The present invention enables the glycerine to be obtained more economically and more simply technically from the slops or spent wash from distilleries even without any previous clarification and chemical purification. The process according to the invention consists essentially in this that the spent wash or slops arising from the distillery, merely neutralised and thickened, preferably not purified and not clarified, but advantageously heated under pressure to a temperature lying above its boiling point at atmospheric pressure, is not subjected in itself to distillation to crude glycerine, but is brought together in distillation spaces with distillation residues originating from the preceding working stage the temperature of which is equal to or higher than the distillation temperature of the crude glycerine to be distilled out at the working conditions coming into question. If the crude glycerine obtained thus according to the invention is freed from its organic impurities, it can then be directly further worked up by the usual methods to glycerine for any desired purpose of use.

The union of fresh slops and distillation residue in the distilling space, essential for the direct and smooth distilling out according to the invention, can be effected either by sucking the freshly supplied slops into the distillation residue and mixing up therewith or by introducing the previously suitably pressure heated slops in as fine a state of sub-division as possible into the preferably evacuated distilling space on to the surface of the distillation residue remaining therein, e. g. by causing the slops to sink into the surface layer of the residue by spraying on. The fresh slops introduced into the distilling chamber, preferably possess a temperature lying at least 20° above the boiling point thereof at atmospheric pressure, and possess also a super-atmospheric pressure of 2–3 atm. according to the density thereof and so forth.

The distillation effected under these conditions provided by the invention and also in the usual manner, e. g. by leading hot steam through the heated distilling chamber, as well as the subsequent condensation of the crude glycerine may be effected with continuous or intermittent withdrawal of the distillation residue collecting in the distilling chamber. In the case of intermittent withdrawal it has been found to be advantageous to withdraw from the vessel or heater on each occasion about one half of the residue remaining from the preceding charge of the distilling vessel and to make up the other half remaining in this to the original amount of charge by means of freshly supplied slops. In the case of uninterrupted withdrawal of the distillation residue the empirically established most favourable amount of charge is continuously maintained by likewise uninterrupted supply of a suitable quantity of fresh slops. In both cases the condensation of the crude glycerine obtained and usually also its distilling out from the slops can be conducted without interruption.

In order to obtain the first distillation residue necessary for starting the continuous distilling process and to bring it according to the invention to at least the distillation temperature of crude glycerine, there are expelled from an initial charge of the suitably pre-heated distillation vessel by any desired further heating thereof, first the water and readily volatile non-glycerine constituents and thereupon the glycerine, then the distillation residue so obtained is reduced to one half by withdrawal, and may be by continued heating brought to at least the distillation temperature of crude glycerine at the pressure prevailing in the vessel. Only now begins the afore-mentioned cnotinuous distillation operation effected by means of the blown-through steam by gradually running in fresh slops up to the point of re-attainment of the normal filling of the vessel.

The crude glycerine distilled out and condensed in known manner is, according to the invention, heated before its further working up to a temperature lying between its boiling point and that of water, that is to say for example between 100 and 140°, thereby held by continuously controlled additions of alkalising agents to an alkalinity of 0.8–1%, and after their stabilisation the decomposition products of the organic impurities are expelled by means of advantageously inert gases, such as for example carbon dioxide, or by means of super-heated steam being blown through.

The glycerine obtained thus can then be adapted in usual manner, e. g. by re-distillation, bleaching and deodourising, to any purpose of use.

The plant for carrying out the process comprises besides known neutralising, thickening, condensing, heating devices and so forth, also, according to the invention a distilling vessel the lower part of which is in direct connection by means of a wide regulably closable opening with a vessel for accommodating the fraction of the distillation residue to be drawn off which is capable of being evacuated and heated. In the

fresh slops supply lead, which either opens out in the lower part of the preferably evacuable distilling vessel or terminates in its upper part preferably with a distributing, injecting or spray device, a compressor is installed as well as a pre-heater for the slops being supplied. In order to influence the rapid expansion aimed at of the slops entering into the vessel under pressure, a pressure reducing valve capable of actuation from the exterior is advantageously installed directly in front of the outlet for the slops or before the distributing, injecting or spray device.

*Example*

The slops coming from the distillery column are neutralised by addition of lime and soda lye, thickened to a density of about 80° Balling in a vaporising plant 1 known per se, for example such as is indicated schematically in the drawing, at the same time heated to about 90° C., compressed by means of the pump 2 to a super-atmospheric pressure of about 2 atms., forced through the steam-heated preheater 3, which it leaves with a temperature of 140–150° in order to enter, by way of pipe 4, into the lower part of the distilling vessel 6 which in the meantime has been heated to about 200° and evacuated. As soon as the slops have filled about one third of the distillation vessel, the further slops supply is interrupted, and by means of continued exterior heating with simultaneous enlargement of the vacuum in water contained in the slops together with the oils which may be present and other readily volatile organic constituents permitted to distil off. As soon as the temperature of the slops has arisen again to about 140–150° the crude glycerine is distilled out by introducing superheated steam, by opening the wide withdrawal opening 7 in the bottom of the vessel, after evacuation of the withdrawal container vessel 8 by means of its vacuum connection 9, about half of the residue remaining in the vessel is withdrawn into the said container, the withdrawal opening closed again and by renewed opening of the slops lead the vessel charge is gradually made up to the original amount. The distillation proper commences on introducing steam, which in contradistinction to the previously known method, takes place prefectly smoothly and quite rapidly amongst other things because of the avoidance of heat loss of the slops entering into the distilling vessel.

According to the prevailing working conditions, the pressure heated slops may also be supplied through the lead 12 as well as through the pressure reducing valve 5 and under sudden expansion be sprayed or ejected by means of the nozzle or sprinkler 13 on to the distillation residue remaining in the vessel, when the water and readily volatile constituents in the slops are to a great extent already distilled during the descent of the drops of slops and carried by the distilling steam into the condensing column 11.

In both cases the distilling vessel charge may be continuously maintained by controlled supply of fresh slops and corresponding withdrawal of distillation residue, and consequently also the distillation operation may be continuously maintained.

If the last traces of the glycerine contained in the slops are also to be obtained, the supply of slops is interrupted after suitable filling of the vessel, its distillate withdrawal lead 10 as well as its vacuum connection closed after distilling off the whole of the glycerine, about half of the distillation residue remaining in the vessel allowed to run off into the vessel 8, evacuated in the meantime, through the suitably opened withdrawal opening 7, the latter opening 7 closed again, the distillate withdrawal lead and the vacuum connection of the vessel opened, further slops supplied until the original degree of filling is attained, and the distillation further continued. This manner of working, even under difficult working conditions, makes possible the maintenance of the distillation vessel perfectly clean and the maintenance of a uniform degree of liquidity of the distillation residue and thereby its ready and rapid withdrawal. The condensation of the crude glycerine distilled off in this case also proceeds smoothly and without disturbance.

In order maybe to separate off more readily certain impurities otherwise distilling off together with the crude glycerine, then finally, although with abandonment of continuous operation, each vessel filling may also be completely distilled out itself and a commencement made with the new charging of the distilling vessel only after withdrawal of the whole of its distillation residue.

The emptying of the withdrawal vessel 8 takes place either by allowing the residue to flow out of the bottom valve 14 or by scooping it out through the lateral particularly wide withdrawal opening 15, according to the degree of liquidity of the distillation residue accumulated in the vessel 8.

In order to avoid corrosion, the inner walls of the distillation apparatus coming into contact with slops and crude glycerine are advantageously of copper, an iron-poor or iron-free alloy, or tinned.

The crude glycerine coming with a concentration of 85–90% from the condensation plate 11 is heated to above 100° before further working up. Average specimens are then withdrawn in brief intervals and corresponding to their acidity, determined in known manner, a quantity of milk of lime and sodium lye is added to the crude glycerine each time which just suffices to adjust its alkalinity to 0.3–1% and not to allow it to fall below 0.7%. This alkalisation is continued until the alkalinity has stabilised. Thereupon the volatile constituents and decomposition products of the organic, namely nitrogen-containing impurities contained in the crude glycerine are blown out by means of carbon dioxide or superheated steam and preferably the acidity of the glycerine obtained thus is adjusted to a pH value of 8 to 8.5.

According to the purpose of use in view if necessary the glycerine is thereupon re-distilled in a raffination plant 16 known per se, treated with active carbon in the apparatus 17 for the purpose of decolorisation or deodorising, forced through the filter press 18 and passed to conveying vessels as a product ready for use.

The utilisation of the hot vapour of the thickening plant, of the distilling and of the waste heating vapour in other stages of the total treatment, namely for feeding the pre-heater and so forth, is of course effected in accordance with the known principles of heat economy.

ERNEST KÖNIGSTEIN.

PUBLISHED
MAY 18, 1943.
BY A. P. C.

E. KÖNIGSTEIN
PROCESS AND APPARATUS FOR OBTAINING GLYCERINE FROM DISTILLERY SLOPS OR SPENT WASH
Filed June 28, 1939

Serial No.
281,718

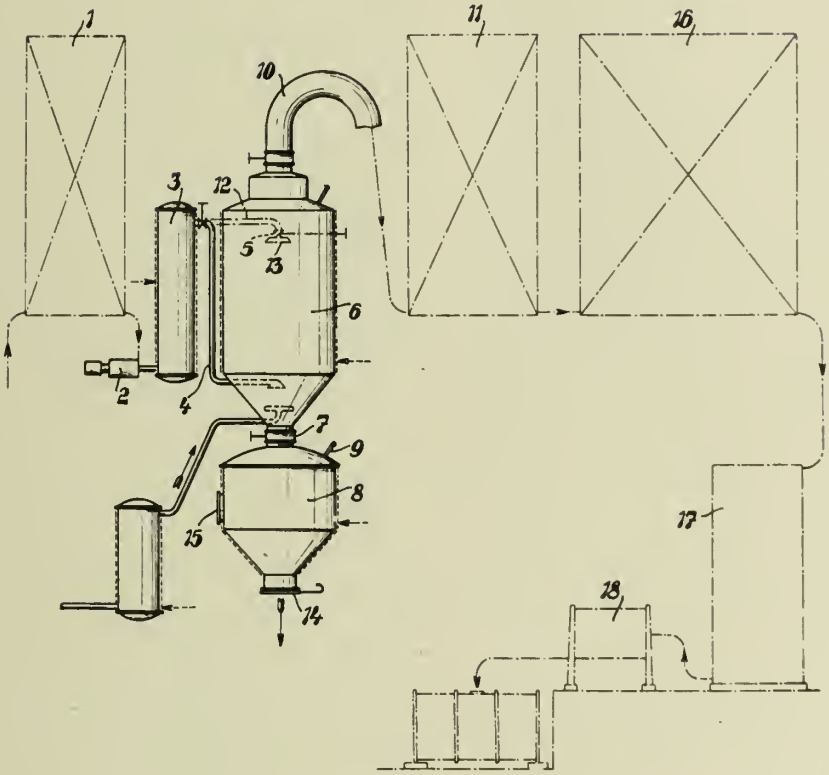


Inventor:
E. Königstein

By: Glascock Downing & Seibold
Attys

Published May 18, 1943 Serial No. 281,826

# ALIEN PROPERTY CUSTODIAN

## ARRANGEMENT FOR CONTROLLING THE POWER OF INTERNAL COMBUSTION ENGINES

Albert Stieglitz, Berlin-Spandau, and Berthold Gärtner, Berlin-Wilmersdorf, Germany; vested in the Alien Property Custodian

Application filed June 29, 1939

This invention relates to an arrangement for controlling the power of internal combustion engines, and more particularly of aero-engines, in which one or more regulating devices are actuated through rods by means of a hand-operated lever, transmission members provided with control cams being arranged between the rods. Such regulating devices present the drawback that the relation—determined by the control cams—between the devices to be regulated (throttle, mixture regulator, fuel injection pump, speed governor etc.) and the hand-operated lever—is fixed for different heights of flight so that it is not possible to adjust at will with the aid of such devices, for instance, the position of the throttle or the supply of the mixture to an aero-engine in the case of different heights of flight and with varying power, since the adjustment of the devices is already fixed in a given sense by the control cams so that the adjustment can no longer be varied at will.

Furthermore, the known regulating devices which utilize the supercharger pressure present the drawback that the supercharger pressure in some engines, for instance, in engines having a great overlapping of the rates of opening of the intake—and exhaust valve, or in two-stroke engines—owing to the fact that the suction conduit communicates through the exhaust conduit with the outside atmosphere—does not represent a univocal regulating magnitude for the gas mixture in the cylinder and therefore for the power.

These drawbacks are removed according to the invention by so designing the transmission members provided with control cams that upon a displacement with respect to the levers cooperating therewith the relation of the transmission of the regulating motion may be varied in accordance with the height of flight.

This variation in accordance with the height of flight may be effected either automatically through an altitude control, for instance, through a barometric impulse transmitting device or through a hand-operated lever, it being, of course, also possible to effect by the use of an altitude control a subsequent regulation by actuating the governor rod through a hand-operated lever.

In this manner it is possible to keep without the use of complicated transmission means and of the governors hitherto employed, the individual regulating device permanently mechanically connected with the hand-operated lever so that a purely mechanical control is attained which is advantageous in many respects, in which case the relation of the individual regulating operations at different heights of flight may be varied. Thus, for instance, the consumption of fuel depending upon the height and the load of the engine may be adjusted at will.

In the accompanying drawings are shown diagrammatically two embodiments of the invention as applied to a speed-controlled aero-engine operating with direct fuel injection.

The aero-engine (not shown) drives a propeller whose pitch is capable of being adjusted. As will be seen from Fig. 1, the pitch may be adjusted hydraulically through the control valve **5** influenced by the speed governor **3**. Consequently, any desired speed is automatically controlled by a corresponding adjustment of the propeller pitch. If the power of the engine is to be varied, preferably by a single hand-operated lever **1**, the shaft **8** is rotated through a rod **2**, gear rack **6** and pinion **7**. On the shaft **8** are mounted, depending upon the members to be adjusted, control cams **9**, **10** and **11**, through which the individual regulating members may be adjusted. In this case the control cams are preferably designed in the form of control cylinders having curves changing in the direction of rotation and axial direction. The controlling force of the spring **16** of the speed governor **3** may be varied by the control cam **9** through the lever **12** pivotally mounted as indicated at **13** and provided at the upper end thereof with a roller **12'** permanently in contact with the control cam **9** through the rod **14** and the bell crank lever **15**; that is to say, by displacing the hand-operated lever **1** into the position shown in dotted lines the spring **16** is stretched and therefore the adjusted regulating valve of the governor **3** is varied in the manner that the speed of the engine and therefore the angle of attack of the propeller is varied or that upon an increase of the speed of the engine the angle of attack of the propeller remains temporarily constant.

At the same time, the motor adjustment is directly influenced through the further control cams **10** and **11**, the levers **19** and **20** pivotally mounted as indicated at **17** and **18** respectively, the upper ends of the levers **19** and **20** being also provided with rollers **19'** and **20'**, in engagement with the respective control cams so that the control cam **10** adjusts the throttle **22** of the supercharger (not shown) and the control cam **11** varies the amount of delivery of the fuel injection pump. These two operations, which are performed through the two control cams **10** and **11**, may, of course, be continued in the event of an internal combustion engine being employed. In

such a case it is further possible to adjust the mixture regulator without the use of measuring gauges directly from a further control cam, for instance, from the released control cam 11. Furthermore, if it is desirable in the case of mixtures ignited by spark plugs to shift also the moment of ignition when actuating the hand-operated lever, a further control cam may be provided for this purpose which adjusts through a rod, for instance, the ignition distributor.

Consequently, by displacing the hand-operated lever 1 into the position shown in dotted lines, a change in the position of the governor 3, in the position of the throttle 22 and in the amount of delivery of the fuel injection pump 24 is brought about through the control cams 9, 10 and 11, thus resulting in an increase in the engine power. The angle of attack of the propeller according to the already adjusted regulating value of the governor 3 is adapted to the increase of the engine power, in case the height of flight should vary to a further extent. If the height of flight is changed then the speed governor 3 is influenced in a known manner in that it varies in accordance with the height of flight the angle of attack so that the speed remains constant. Since there results for this changed height of flight other adjusting conditions for the regulating members—in this case the throttle 22 and the fuel injection pump 24—that is in the sense that upon an increase in the height of flight the throttle 22 must be opened owing to the smaller air density, whereas the quantity of delivery of the injection pump may be reduced in order to permit an economic operation of the engine with a poor mixture when flying, this circumstance is taken into consideration in the manner that a new adjustment of the injection pump is effected in accordance with the height of flight.

To this end, preferably a barometic impulse transmitting device may be employed which automatically influences a rod 26 in such a manner that a movement is imparted in the direction of the arrow by the rod 26, for instance, through a bell crank lever 27 to the shaft 8 and preferably to all of the control cams 9, 10 and 11 mounted on the shaft 8 so that on the one hand the composition of mixture—that is in this case the position of the throttle and the amount of delivery of the injection pump 24—is altered and that on the other hand the speed is varied through the just adjusted speed governor 3.

If for particular reasons it should be advisable—for instance, in case the impulse transmitting device should fail to operate—to introduce at all events an additional regulating magnitude, the shaft 8 and therefore the control cam may be displaced by hand through a particular rod; for instance, through the bell crank lever 27.

In the embodiment shown in Fig. 1 the regulating impulse of the barometric impulse transmitting device 25 is first transmitted to a control piston 28, to whose central portion oil under pressure is supplied through the supply duct 29. If the height of flight changes for instance, from 2000 m. to 2500 m., the control piston 28 is displaced owing to the expansion of the measuring gauge 25 in the direction as indicated by the arrow beyond the piston 31 shown in the initial position in the regulating cylinder 32. The piston 31 then displaces through the rod 26 the shaft 8 and at the same time, preferably through the same rod 26 a further lever 35 rotatably mounted as indicated at 33 and connected to the measuring gauge 25 as indicated at 34—the purpose of the lever 35 is to displace after a complete control operation the measuring gauge with its control valve 28 in the opposite direction until the supplied ducts 30 and 30' leading to the cylinder 32 are closed so that the piston 31 comes to rest. Of course, it can be so arranged that the barometric measuring gauge 25 in the chamber 36 is also exposed through the passage 37 to the impact pressure. In this case also the outside temperature may be considered when designing the measuring gauge in a corresponding manner in order that these factors are also considered when the shaft 8 is displaced; in this manner the most favorable total motor adjustment is attained.

In the embodiment shown in Fig. 2 the control cams in contradistinction to the embodiment shown in Fig. 1 cannot be separately or jointly displaced in the axial direction, but when actuating the hand-operated lever—not shown—the control cams 10 and 11 are axially displaced, in which case the control cams as regards the additional regulating magnitude (the height of flight) are rotated.

If the rod 2 is displaced through the hand-operated lever in the direction of the arrow, this movement may be directly transmitted through the lever 39 pivotally mounted as indicated at 38 and cooperating with the gear 38', through the gear rack 40 and push rod 41 to the lever 43 pivotally mounted as indicated at 42. In the embodiment shown a hydraulic power amplifier 44 is so arranged that the gear 38' displaces first a control piston 45 provided with the gear rack 40, oil under pressure or the like which may reach the passage 47 through an opening being supplied if necessary through an axial bore 46 to the control piston 45. The control piston 45 moves to the left in the direction as indicated by the arrow and oil under pressure is then supplied through the duct 47 to the space in front of the working piston 48 cooperating with the push rod 41 and arranged in the chamber 49 so that the working piston 48 displaces the push rod 41 in the direction of the arrow until the passage 47 is again covered by the control piston 45. The fork of the lever 43 is in engagement with a pin 50 arranged on the part 51 connecting the two control cams 10 and 11. These two control cams are slidably mounted on the shaft 53, for instance, through a wedge 52, but for the moment cannot be rotated. The lever 43 displaces now the control cams 10 and 11 in the direction of the arrow and in accordance with the curves of the cams so as to move the tappets 54, 55 in the upward direction.

The tappets 54 and 55 may actuate, for instance, through gear racks and gears 56, 57 or through the control piston hydraulic power amplifiers 44 and rack gear 58, the throttle 22 of the supercharger—not shown—and adjust the amount of delivery of the fuel injection pump through the gear rack 59 and pinion 60. Also in this case it is possible as in the embodiment of Fig. 1, to combine, if desired, these two adjustments, in the event of an engine provided with a carburettor being employed.

Upon the displacement of the rod 2 in the direction of the arrow by the hand-operated lever the position of the two control cams 10 and 11 are first changed through the hydraulic power amplifier 44 arranged between the rod 2 and the control cams 10 and 11 and the position of the throttle is changed and the quantity of the fuel is varied by the control cams 10 and 11 through the power amplifier 44. At the same time also the gear 62 and therefore the shaft 63 are rotated in

the direction of the arrow through the toothed segment 61 integral with the lever 43. On this shaft are mounted further control cams, that is, for instance, a control cam 64 against which a roller mounted on the lever 66 may be pressed, which roller varies, for instance, the desired value of the speed governor 3—not shown—through the rod 68 and a further control cam 65 against which a lever 67 is pressed in the same manner which adjusts through the rod 69, for instance, the moment, at which the ignition of the ignition device 72 occurs, in which case the mixture is ignited by spark plugs.

If the height of flight varies there results other adjusting conditions for the regulating members; i. e. in this case also the throttle is actuated to the open position and in order to effect, for instance, a saving in fuel when flying, the amount of delivery of the fuel injection pump is reduced or the amount of delivery is adapted to the decreasing supercharger pressure when a height is involved corresponding to the rated power. This circumstance is taken into consideration in the manner that a control piston 28 upon a change in height is, for instance, displaced to the right also through a barometic impulse transmitting device, which control piston 28 uncovers one of the passages 30. Oil under pressure may now pass through the passage 30 into the operating chamber 73 so that the piston 74 secured to the shaft 52 is rotated in the direction of the arrow. Upon the rotation of the piston 74 the control cams are rotated through the shaft 53 and the wedge 52 so that the adjustment of the regulating members is varied owing to the curve changing in the direction of the arrow in accordance with the corresponding height of flight. Upon the rotation of the shaft 53 the lever 77 is rotated at the same time through the thread 75 and the adjusting nut 76 arranged thereon so that a control cylinder 78 secured to the lever 77 through the rod 79 closes again the corresponding channel 30 uncovered by the control piston 28.

Since it is desirable, particularly when employing an aero-engine provided with a supercharger to impart to the supercharger at different heights a different speed through a gear the supercharger gear 78 is, as will be seen from Fig. 2, preferably changed over hydraulically through the rod 79 and the operating piston 80 with the aid of a control valve 83 actuated also by the impulse transmitting device 25. In the position shown, for instance, when using a step gear with two speeds the first speed is put in and as soon as the control piston 83 moves in the forward direction oil under pressure is supplied to the space behind the operating piston 80 through the passage 81 so that the piston moves in the direction of the arrow and thus puts in the next speed step. If the supercharger is changed-over from the speed I at a given height to the step II the adjusted values, for instance, the position of a throttle and the amount of delivery of the fuel injection pump do not correspond to the new speed of the supercharger. To bring about always the proper motor adjustment for the new speed of the supercharger, the pivot of the lever 77 is preferably so provided on the rod 79 as indicated at 82 that the lever 77 may rotate through the adjusting nut 76 and thread 75 which may preferably be designed in the form of a multiplex thread and through the shaft 53, the control cams 10 and 11 a further amount beyond the rotation performed through the barometric impulse transmitting device until the supercharger pressure and the amount of fuel attains the desired value. Such a change-over of the supercharger gear may, of course, be also performed in the same manner in the embodiment shown in Fig. 1 by varying in this case also the axial displacement of the shaft 8 in accordance with the new speed of the supercharger.

If the supercharger gear employed is a step gear it is preferable to effect the change-over suddenly and to provide on the other hand between the individual change-over points such a great difference in the height of flight that at a given height a permanent putting-in and out of gear is effected. If, for instance, the supercharger gear is changed-over at a height of 3000 m. to the next higher step, the change-over to the lower gear step is effected, for instance at a height of 2800 m. so that 200 m. are available for the difference of the change-over of the gear. Fig. 3 shows how such an overlapping of the change-over points is possible. The control piston 83 uncovers through the barometric impulse transmitting device—not shown—the passage 81 upon the displacement of the control piston 83 in the direction of the arrow so that oil under pressure may be supplied to the space in front of the piston 80 approximately at the same time the control piston 83 in the sleeve 84 has uncovered the opening 86 and the channel 85 to such an extent that pressure oil may pass through the joint 87 between the sleeve 84 and the casing. Since the sleeve 84 is so slidably mounted on the control piston as to freely move a distance as indicated at 88 capable of being determined the sleeve is displaced under blows to the left by the amount 88 owing to the oil pressure acting at the joint on the sleeve 84, and the sectional area of flow is thus restored by the displacement of the opening 86 over the supply passage 81.

It is evident that upon a change of height of flight the control piston 83 must travel a predetermined distance within the sleeve 84 until the latter is first displaced and the supercharger gear is changed over. This distance of the control piston in the sleeve or the measure of the individual openings caused by the sleeve, is a deciding factor for the range on which the impulse transmitting device changes over the supercharger to a higher or lower step.

Finally, it may be so arranged that the motor delivers, for instance, its maximum power during a predetermined period, for instance, during the take-off or the like. The time during which such a motor may operate under these conditions is limited and a clock-work has therefore been provided between the rod 2 of the hand-operated lever in the manner that after a certain time it automatically varies the motor adjustment in such a manner that the motor can no longer be overloaded. In Fig. 4 is shown an embodiment for the above purpose, in which the sleeve 92 slidably arranged on the shaft 93 and bearing against the collar 94 is displaced against the force of the spring 91 together with the shaft 93 in the direction of the arrow through the rod 2 and the lever 90 rotatably mounted as indicated at 98, if the rod 2 is also displaced in the same direction. The normal power of the engine attains its limit as soon as the collar 95 of the rod 2 comes into engagement with the extension 96 of the clockwork 99. At the same time, the rod 93 and the stop 98 integral therewith comes into engagement with the extension 97. If the engine is to deliver a greater power for a given period,

the hand-operated lever and the rod 2 as well as the rod 93 may be further displaced through the lever 90 and the sleeve 92 by a given distance in the direction of the arrow against the extension 96 and 97, thus switching in the clockwork 99. As soon as the clockwork has run down it switches in a drive—not shown—which moves preferably the extension 97 into its initial position. In this manner the rod 93 is displaced in the opposite direction against the force of the spring 91 without moving the sleeve 92 so that the engine attains automatically its normal adjustment after a predetermined time. The pilot cannot influence this state by the stationary sleeve 92 so that the engine will not be overloaded for a considerable time. The disengagement of the rod 93, for instance, from the take-off position may be indicated under circumstances to the pilot through the clockwork 99. Furthermore, it is possible to couple a recording device with this clockwork in such a manner that it indicates how often the engine has travelled at maximum power, in order to have a better idea, for instance, of the rapid wear and tear of the engine or the like. If in the embodiments shown control cams have been chosen which are designed in the form of control cylinders, it is, of course, also possible to choose within the scope of the invention, other control cams; for instance, to develop a control cam which has different characteristics on different circles, the different regulating members being normally influenced by the rotation when using such a control cam, whereas when passing from one circle to the next following, for instance, by displacing the centre of the curves, the additional regulating magnitude may be determined.

ALBERT STIEGLITZ.
BERTHOLD GÄRTNER.

PUBLISHED
MAY 18, 1943.
BY A. P. C.

A. STIEGLITZ ET AL
ARRANGEMENT FOR CONTROLLING THE POWER
OF INTERNAL COMBUSTION ENGINES
Filed June 29, 1939

Serial No.
281,826

2 Sheets-Sheet 1

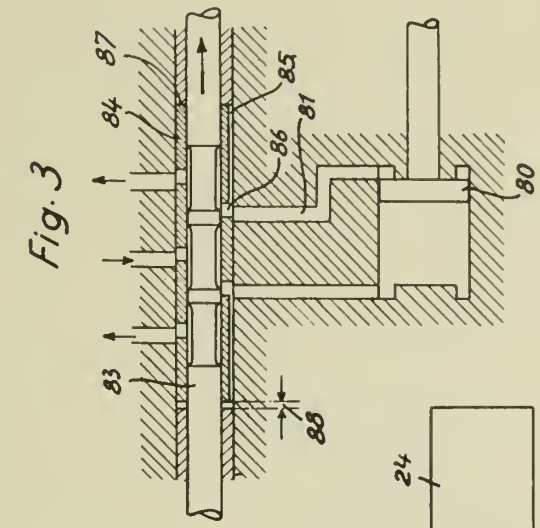

Fig. 3

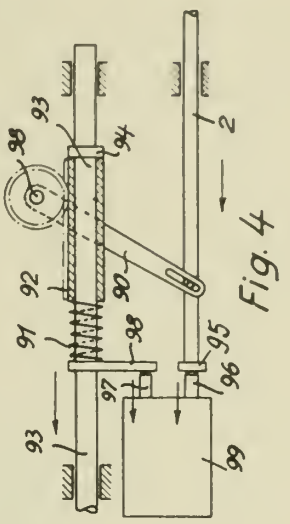

Fig. 4

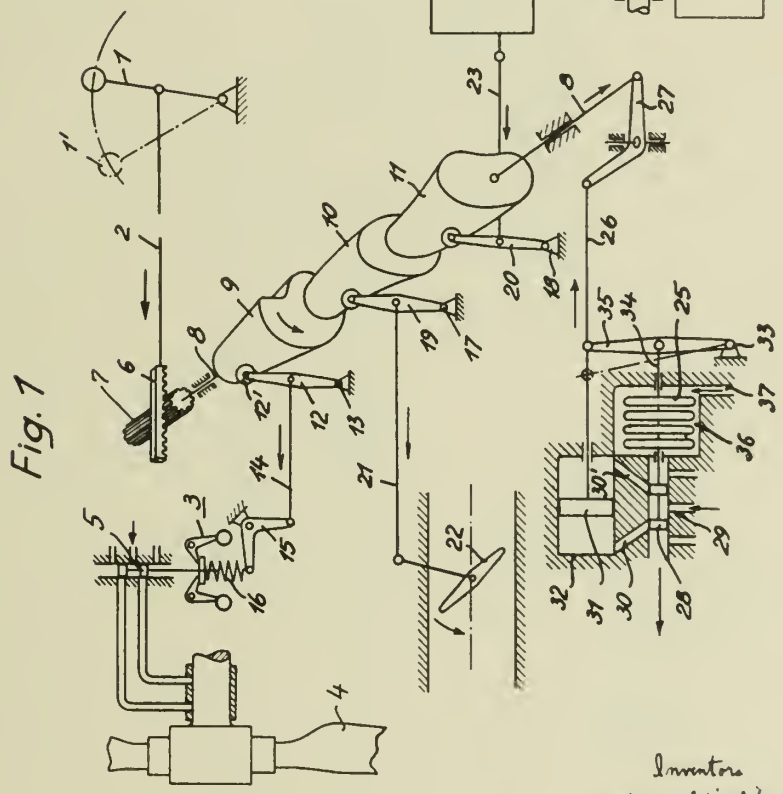

Fig. 1

Inventors
Albert Stieglitz and
Berthold Bärtner
by Knight Bros
Attorneys

PUBLISHED

MAY 18, 1943.

BY A. P. C.

A. STIEGLITZ ET AL

ARRANGEMENT FOR CONTROLLING THE POWER OF INTERNAL COMBUSTION ENGINES

Filed June 29, 1939

Serial No. 281,826

2 Sheets-Sheet 2

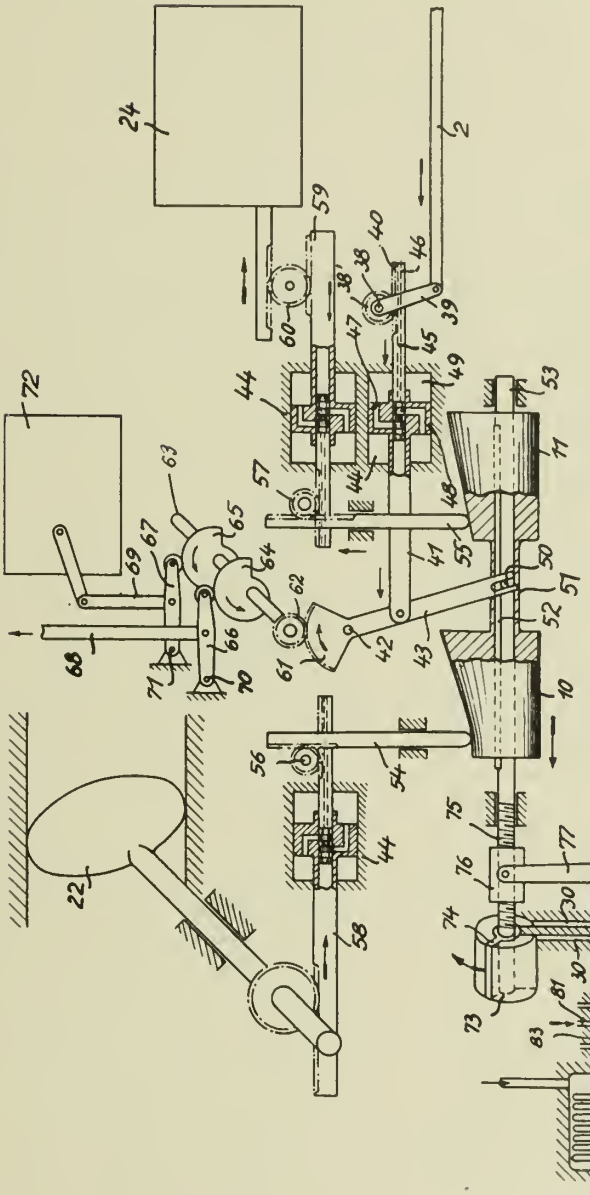

Fig. 2

Inventors
Albert Stieglitz and
Berthold Bärtner
by Knight Bros
Attorneys

Published May 18, 1943 Serial No. 282,916

# ALIEN PROPERTY CUSTODIAN

## MICRO-CHRONOMETER FOR MEASURING DISTANCES BY THE ECHO SOUNDING METHOD

Robert Wellenstein, Bremen, Germany; vested in the Alien Property Custodian

Application filed July 5, 1939

The invention relates to a micro-chronometer for measuring distances by the echo sounding method, by which sounds are emitted at certain intervals and the time required for the arrival of the echo from an object, whose distance is to be ascertained, serves as a measure for this distance, which is indicated on a distance scale by the echo impulse. In order to retain the indications of the echo impulses occurring at very short intervals, it has been proposed to construct the indicating device in such a way that an indication remains visible beyond the duration of the echo impulse and is removed only by means of a device actuated by a subsequent echo impulse. With this arrangement, it has been found that uncertainties are liable to occur owing to the fact that the indication, after the echo impulse has ceased, remains at the value corresponding to the last echo. Surely, the observer in an aeroplane, or for example the pilot when starting, will see from the unchanged indication that, for example, if flying beyond a certain altitude which is in the upper portion of the measuring range, no echoes arrive or that the echoes do not cause the device to respond. However, it may also occur that this cannot be discerned or not soon enough.

In order to preclude such uncertainties in reading the indication, the present invention provides an electric circuit which is interrupted or closed or influenced in any manner only in the case of echoes arriving in a certain order of succession, and which is arranged so that, if not influenced owing to non-arrival of echoes, after a certain time it removes the existing indication or produces an indication showing that the echoes do not arrive. In this way it is attained that the indication is removed or some other sign is given if during a certain period no echoes have arrived or have caused the device to respond.

Advantageously the removal or shifting of the indication is effected only after several echoes have failed to arrive, as in most cases it is not desired to have the indication removed if one single echo has failed to arrive. Thus, in the case of echo-sounding by an aeroplane it may occur frequently that some echoes do not arrive at the upper mark of the indicating range, which would not render useless the existing indication. It is, therefore, advisable to construct the device in such a way that the permanent indication is not interrupted if some echoes fail to arrive, but that the existing indication is removed only in case of non-arrival of a number of successive echoes. This is an advantage, particularly if the indication is effected by a pointer instrument, for example a voltmeter, as the pointer system, by rapidly switching off and on in each case of non-arrival of an echo, is subjected to such vibrations that it will take some time before it will come to rest again. These vibrations are especially large, as the non-arrival of echoes mostly occurs in the upper portion of the measuring range so that the pointer, each time the current is interrupted, has to move along the whole scale to reach the zero-position. Therefore, it is advantageous not to let the pointer return to the zero-position each time an echo fails to arrive, but to shift the existing indication to a place above the measuring range. In this way, the deflection of the indicating system is reduced to a minimum, bringing the system more rapidly to rest than when completely removing the existing indication. In addition, there is the advantage that the observer immediately knows, from the position of the indication, the working condition of the echo sounding device.

Advantageously, a condenser is provided, the loading condition of which is influenced by the arriving echoes, and which, in case the echoes fail to arrive, has a potential above or below a certain limit and thereby removes or shifts the existing indication. The potential of the condenser may in this case be used as grid potential for controlling a valve whose anode circuit effects the removal or shifting of the indication. The arrangement can also be made so that the condenser is discharged via a glow valve or a thyratron valve when the given limiting voltage is exceeded. This system has the advantage that the device is ready to indicate immediately after the removal or shifting has been effected, so that the first newly arriving echo is properly indicated.

The circuit effecting the removal may, according to another arrangement, be provided with two electric valves or switches, one of which is opened by the arriving echoes and is closed when the sound is emitted, whereas the other switch, serving as key, is momentarily closed or opened at certain intervals immediately before the sound is emitted. The two switches may be employed either in series connection, serving to effect the removal when both are closed, or in parallel connection, serving as current shunt and effecting the removal when both are opened.

In order that the removal should only be effected when several echoes have failed to arrive, the device may be arranged so that the key switch is actuated before each sound emission

and that the circuit serving for the removal in case of the non-arrival of echoes contains a time switch or time circuit or is arranged as time circuit in such a way that when the current is closed owing to non-arrival of an echo, the removal of the existing indication is effected only after several successive soundings, but that the time circuit or time switch is put in its initial condition on previous arrival of an echo.

The invention is illustrated by two constructional examples in the accompanying drawing in which:

Fig. 1 is the circuit diagram of an echo sounding device with a voltmeter as indicator, and

Fig. 2 is a part of the echo sounding device in a second form of construction.

The illustrated device serves for measuring the distance by the echo sounding method and will be described in its application to echo sounding by aeroplanes for measuring the altitude.

By means of a contact transmitter 1, revolving at a uniform speed and driven by a motor, not illustrated in the drawing, an emitting circuit 2 is momentarily connected, which actuates a sound emitter 3, for example a whistle for emitting a short sound impulse from the aeroplane directed towards the surface of the earth. The sound ray reflected by the surface of the earth is taken up by a receiver 4, which transforms it into electric energy and conducts it via an input transformer 5 to the first valve of an amplifier 6. The amplified echo impulse is conducted from the amplifier to the grid of a thyratron 7. The thyratron is in the discharge circuit of a condenser 8 which is charged by a source of potential 9 via a resistance 10. The discharge current impulse is used for controlling the actual indicating device.

For the purpose of ascertaining the time which lapses from the emission of the sound impulse up to the arrival of the echo, as a measure of the distance covered by the sound or of the altitude of the aeroplane, chronometers of known construction can be employed. In the form of construction shown in Fig. 1, the indication is effected by a voltmeter 11 which, at the moment of the arrival of the echo, is momentarily connected by a change-over relay 12 via a revolving time-giving member and a collector 14 to a more or less high potential according to the position of the time-giving member. The line *a*, which is to illustrate a wave, indicates that the time-giving member 13 is to revolve in synchronism with the contact transmitter, whereas the line *b* indicates a contact disc, similar to the time-giving member 1, with which it revolves in synchronism. The collector contacts 15 of the collector 14 are connected to a potentiometer 16, voltages increasing in certain amounts being coordinated to each contact 15, commencing at the zero-point of the collector. By unequal distribution of the potentiometer taps and of the collector contacts, the accuracy of reading as well as the accuracy of measuring in the various ranges of the scale can be divided so as to suit the respective purpose in the most favourable manner.

For obtaining a permanent indication, a condenser 17 is connected in parallel to the voltmeter, the condenser 17 being charged during the short period of connection and contact by the time-giving member 13, whereby the respective potential value is retained until the next echo is indicated.

In the circuit of the thyratron there is a second relay coil 18 for actuating the switch 19 which is connected to one pole of the secondary coil of the input transformer 5 and in one position joins this coil to the grid of the first amplifying valve, and in the other position disconnects the coil from the grid of the amplifying valve, so that no amplification of the echo indication can be effected. When the condenser 8 is discharged owing to ignition of the thyratron 7 by echo impulse, the switch 19 is brought by the relay coil 18 into the position shown in the drawing by a dashed line, in which position the input transformer 5 is short-circuited. The switching relay or the switch 19 is arranged in such a manner that it remains in its existing position in which the receiving device remains disconnected after arrival of the echo. In this way, it is attained that only the first echo is indicated. Therefore, multiple echoes, occurring in a particularly intense degree in aeroplane sounding, do not affect the indication. Only with the next sound emission the switch 19 is brought into the other position shown in the drawing by a continuous line by means of a second relay coil 20 or a mechanical switching device actuated by the emission impulse, so that the receiving device is ready to indicate the next echo.

With each sounding, the sensitivity of the device is readjusted to the existing altitude, the adjustment of the sensitivity being effected by regulating the negative grid bias of the thyratron by means of a charging and discharging circuit 21, 22, controlled in the rhythm of the soundings.

For testing the echo sounding device, a switch 23 is provided in the discharge circuit 22 by which the regulation of the negative grid bias can be disconnected, so that the thyratron continuously works with the highest sensitivity. Thereby it is attained that the receiving and indicating device responds to the direct sound. If this is not the case, it is a sign that there is a disturbance. The distance to be covered by the direct sound from the emitter to the receiver is smaller than the distance covered by the sound to the surface of the earth and back to the receiver, when the aeroplane rests on the earth in which case the altitude is zero. Therefore, the test indication is not within the scale of altitudes but is in the range marked 24 "Testing" below the zero-point of the scale of altitudes.

When the distance or altitude of a starting aeroplane exceeds a certain limit, the echoes cannot cause the device to respond. Then, the indication remains at the last value indicated and there is the danger of concluding that the altitude is unchanged. In the opposite case, an unchanged indication of altitude would cause uncertainty as to whether the altitude is actually constant or whether the indication has remained owing to non-arrival of echoes.

In order to preclude this uncertainty, a relay 25 is provided which in the case of non-arrival of several echoes momentarily conducts to the voltmeter 11 and the condenser 17 a potential above the range of potentials utilized for indicating. Accordingly, the scale of the indicator of altitudes is provided with an indicating range adjoining the top of the scale of altitudes marked 26 "Echo not arrived". The relay 25 is in the discharge circuit of a condenser 27 which is charged by a source of potential 28 via a resistance 29. The discharge is effected by a glow valve 30 which tilts when a certain limiting voltage is exceeded and thereby causes a sudden discharge current to

actuate the relay 25. Parallel to the discharge circuit 25, 30, there is a second discharge circuit which, on arrival of an echo, is closed by the polarized relay 19 provided for protection from re-echoes. The discharge resistance of this circuit consists of the resistance of the secondary coil of the input transformer 5 and an additional resistance 31, and is so dimensioned that, in the case of regular arrival of echoes, the condenser 27 cannot be charged up to the limiting voltage required for tilting the valve 30 via the relay 25. This limiting voltage is only reached if the discharge via the resistance 31 is not effected owing to non-arrival of echoes during several, for example three, successive sounding periods.

Fig. 2 shows a connection in which an indicating circuit 32 is interrupted, whereby the indication is removed as soon as only one echo has failed to arrive. The connection consists of a current shunt in one branch of which is located the echo protection switch 19, and in the other branch a key 33 which is momentarily opened immediately before each sound emission by a cam 34 revolving in the rhythm of the soundings. If no echo has arrived up to then, the switch 19 lies on the left, and the circuit 32 is interrupted.

The invention is not confined to the example illustrated. There are various possible modifications and other forms of construction.

Thus, the discharge of the condenser 27 by the echo, instead of being effected via the re-echo protection switch, can be effected via some other relay actuated by the echo, for example by a valve controlled by the echo and normally locked by a corresponding grid bias. Instead of discharging the condenser 27 via a tilting valve 30 when the limiting voltage is reached, its potential may be used for locking or unlocking a valve in the circuit of the relay 25 when the limiting value is reached. Instead of closing a discharge circuit by the echo, it is possible to connect by the echo a source of potential to the condenser 27, or the echo may serve to produce a direct voltage via a transformer and a rectifier, which direct voltage influences the condenser 27 in one way or another. Finally, the invention may be utilized in connection with other echo sounding devices, for example such in which the potential measuring the distance is supplied by the discharge of a condenser instead of by a rotating potentiometer, or in connection with plants having a multitude of indicating members.

It is essential that the device producing the indication of the echo impulse acts suddenly so that the indication is particularly distinct and does not appear like a gradual change of altitude.

ROBERT WELLENSTEIN.

PUBLISHED
MAY 18, 1943.
BY A. P. C.

# R. WELLENSTEIN

## MICRO-CHRONOMETER FOR MEASURING DISTANCES BY THE ECHO SOUNDING METHOD

Filed July 5, 1939

Serial No. 282,916

FIG. 1.

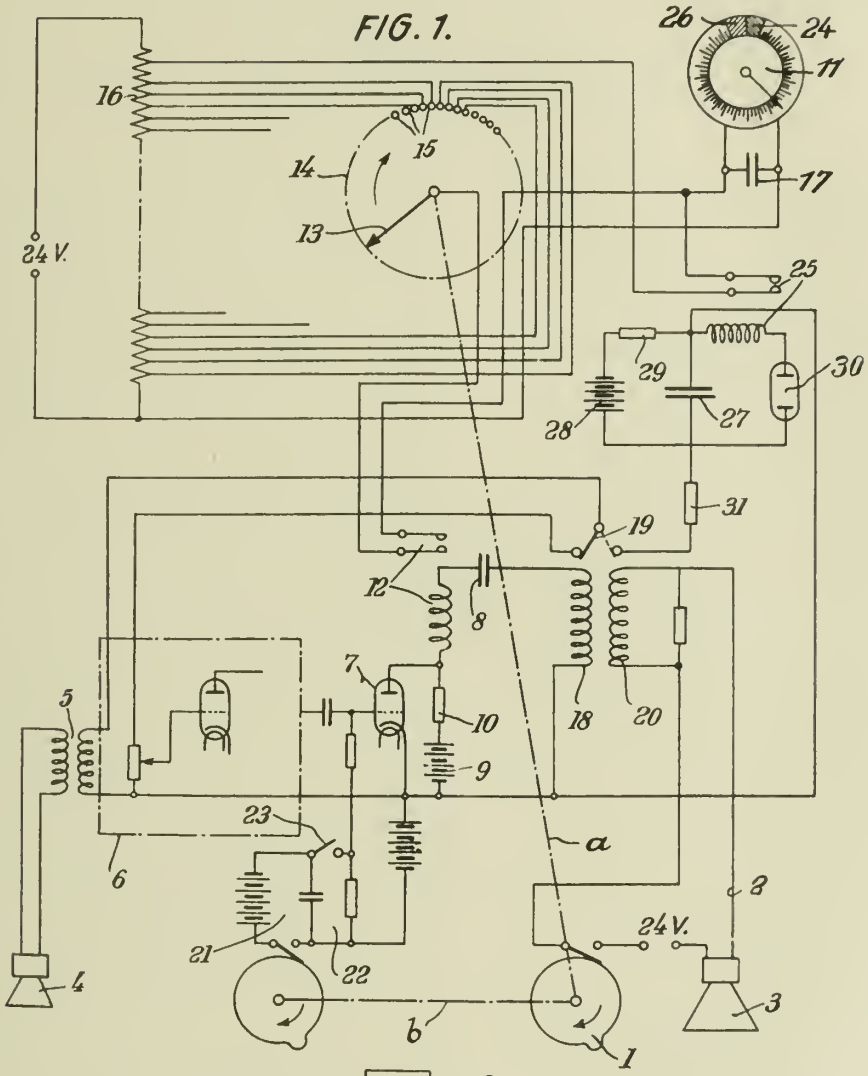


FIG. 2.

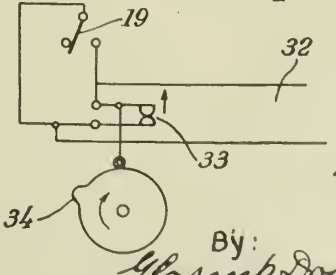


Inventor,
R. Wellenstein

By:
Glascock Downing & Seebold
Attorneys

Published May 18, 1943 Serial No. 283,312

# ALIEN PROPERTY CUSTODIAN

## PURIFICATION OF GASES

Bernhard Berghaus, Berlin-Lankwitz, and Wilhelm Burkhardt, Berlin-Grunewald, Germany; vested in the Alien Property Custodian

Application filed July 7, 1939

The invention relates to an apparatus for the purification of gases, more particularly noble gases, by the removal of undesirable admixtures, such as for instance oxygen, nitrogen, hydrogen or hydrocarbons. The invention consists in this that an easily vaporisable metal, such as zinc, magnesium, lithium, calcium, beryllium, lead etc., in the form of a solid body mounted in an electrically insulated manner, connected up as an anode, or permanently or temporarily as a cathode, is heated up by the heating action of the gas discharge in a gas discharge chamber, the wall of which may permanently or temporarily constitute the cathode to such a temperature that a metal vapour partial pressure of at least $10^{-4}$ mm Hg, preferably $10^{-2}$ to 1 mm Hg is produced. The metal body to be vaporised is preferably mounted in the middle of the gas discharge chamber.

The speed of vaporisation of the metal may be regulated by the vacuum which is produced, or by the electric power which is applied.

The metal to be vaporised preferably consists of magnesium or a magnesium alloy, such as elektron. The gas purification may be carried out at a vacuum of 30 to 0.001 mm, preferably 3 to 0.1 mm Hg. The gas discharge chamber may also be made of magnesium or a magnesium alloy and is preferably cooled. The gas supply and discharge is preferably effected by the insulated, screened and cooled current lead-in. The purification of the gas by the vaporised metal is effected at voltages between 150 and 5,000 volts. The discharge current or the discharge power is dependent upon the dimensions of the apparatus to be operated and the amount of gas passing through.

Experiments have shown that a purification of noble gases may be quickly effected, if, for instance, magnesium is vaporised in the purification chamber. The impurities which easily react chemically with the magnesium which is present in its vapour form are deposited on the cooled wall of the discharge chamber. Even at a temperature of 340° C and a pressure of 0.1 mm Hg of the filling gas the magnesium develops an amount of vapour of 1 milligram per $cm^2$ surface and hour of the body to be vaporised. With the amount of specified vaporisation one can combine an amount of oxygen of 0.36 $cm^3$ at 760 mm Hg. The amount of gas to be passed through the apparatus depends on the amount of the magnesium vapour which is developed. For instance, at a temperature of 500° C, 4 gramms of magnesium would be converted into vapour per $cm^2$ of surface of the magnesium body and hour. With this amount one can combine an amount of oxygen of 1.5 litres at 760 mm Hg or the corresponding equivalent of nitrogen. It will be seen that with a magnesium body having a suitably large surface one can obtain economical purification of noble gases. The extremely quick purification action by the metal vapour is apparently due to the ionisation of the metal vapour in the gas discharge chamber. The purification, which could be ascertained by the reduction in pressure, took place almost instantaneously, always when the spectrum of the metal vapour became visible.

The installation is suitable for the obtention of spectrum pure argon from technical argon and as accessory apparatus for the purification of noble gases for cathode disintegration purposes in a flow or circulating installation.

In the metallisation of articles by cathode disintegration the impurities in the filling gas, such as oxygen, nitrogen and the like, as well as the air flowing through owing to the apparatus not being gastight, have a disturbing effect, causing the articles to be metallised to be oxidised, for instance on the surface, which, in addition to causing very bad adhesion of the coated layer, may even render the latter questionable in the case of coating by means of base metals.

This applies also as regards the gases released by the body to be coated at the high temperature.

The invention also relates to a method of metallisation by cathode disintegration the characteristic feature of which is, that the filling gas of the cathode disintegration chamber is supplied through a gas discharge purification apparatus, in which solid metals, such as for instance magnesium or magnesium alloys which are capable of combining oxygen or other undesirable constituents, such as nitrogen and the like, are vaporised by a gas discharge. Further, the filling gas may be circulated in the cathode disintegration and gas discharge purification apparatus.

The metal to be vaporised may be subjected to the gas discharge, preferably glow discharge, in an electrically insulated manner, as anode, or permanently or temporarily connected up as cathode. The pressure of the filling gas at which the gas discharge takes place may be between 30 and 0.001 mm Hg, preferably 3 to 0.1 mm Hg. The voltage applied to the path of discharge may be 150 to 5,000 volts, preferably 200 to 1,000 volts. The gas supply and discharge is preferably effected through the insulated, screened and cooled current lead-in.

The purification of technical noble gases in a

circulating system is already known, but it requires a long time before the noble gas is obtained spectrum pure. In the case of vacuum installations which have to be extremely airtight as, for instance, for physical purposes, such a purification by means of a Gehlhoff cell is quite sufficient.

Experiments have shown that, in the case of purification of technical noble gases for disintegration purposes, not only the binding of the existing impurities in the filling gas is important but also the binding of the gases which flow continually owing to the practical apparatus, for instance of metal, not being airtight, as well as of the gases which are freed when the articles to be coated are heated up. The release of gases by metallic articles is especially considerable at 300 to 500° C. In the case of the known purification process these gases are removed far too slowly during the disintegration, so that the disadvantages above referred to are not avoided. According to the invention, owing to any temperature being imparted to the metal to be vaporised it is possible to convert such an amount of metal vapour that the impurities are bound immediately.

For instance, magnesium was vaporised in a purification chamber in order to obtain spectrum pure argon during the coating of iron with aluminium. It was possible in that case, according to the temperature at which the magnesium was desired to be vaporised, to maintain the pressure of the filling gas which was circulated constant, while, when the voltage was removed from the purification plant, there followed immediately a reduction in pressure. In this way the gases which were freed from the iron body to be coated between 300 and 400° C., as well as the air let in owing to the apparatus not being airtight, could be continually removed without the requirements stipulated with respect to the vacuum-tight joint of the apparatus being too strict. By increasing the speed of vaporisation, that is to say, the temperature on the solid magnesium body, it was even possible to consume the noble gas and thus obtain a continuous reduction in pressure during the coating. The temperature of the magnesium body was between 300 and 500° C. The coatings, without a purification plant and when use was made of a gas filling of spectrum pure argon from ampullas of 1 litre capacity as obtainable in the trade, consisted of loose grey powder on the iron bodies. Moreover, the disintegration of the cathode material took place very slowly, the disintegration figure being only 20 mgr. per kilowatt hour. The coating could be easily removed by wiping it off. The chemical investigation showed a mixture of magnesium oxide and magnesium.

By using the purification plant according to the invention by means of magnesium vapour at a partial pressure of about $10^{-4}$ up to 1 mm. Hg., it was possible to provide reliable crystalline aluminium layers of great adhesion strength. The disintegration amounted to 500 mg. per kilowatt hour. Chemical analysis of the layer showed pure aluminium. The vaporisation of the magnesium body was effected whilst the same was mounted in an electrically insulated manner in the gas discharge chamber. The wall of the gas discharge chamber was connected up as a cathode and supplied the electronic emission required for the heating up of the magnesium body. The same effect could be obtained by connecting the magnesium body as the anode of the gas discharge. The purification could be effected also in a reliable manner by using an alternating current voltage between the wall of the gas discharge chamber connected up as one electrode and the magnesium body to be vaporised connected up as the other electrode. The heat conduction of the magnesium body to be vaporised was kept very low by a suitable support and the wall of the discharge chamber was cooled by means of water.

The invention also relates to an apparatus for carrying out the method hereinbefore described, its characteristic feature being that a gas discharge purification apparatus is used, which consists of a gas discharge chamber with the metal to be vaporised mounted in the center in one circuit with the cathode disintegration chamber.

The invention also relates to a method for the metallisation of articles by cathode disintegration the characteristic feature of which is, that, in order to remove the impurities of the filling gas in addition to the cathode used for the metallisation, there is connected up a second cathode of a material which will bind the impurities of the filling gas, such as oxygen, nitrogen etc. In order to remove the impurities of the filling gas a cathode of magnesium or magnesium alloy is also connected up in the path of the discharge. The purifying cathode may be operated by its own circuit the intensity of the discharge of which can be varied. The purifying cathode may, however, also be constituted by parts of the wall of the cathode disintegration chamber. A very efficient arrangement is to use very large surfaces as purifying cathode, such as, for instance, the whole of the inner surface of the cathode disintegration chamber. The latter may, in this case, be made of magnesium or its alloys and be subjected as a purifying cathode to a discharge by means of its own electric circuit. Magnesium and its alloys bind oxygen, nitrogen, as well as hydrocarbon and other impurities, which flow through the apparatus owing to its joints not being airtight, or are at present in the filling gas which is used or are liberated by the bodies to be coated while they are being heated. Owing to the impurities being bound by the purifying cathode the latter is hindered in its disintegration and, therefore, does not contribute to the coating of the article to be coated. When using a single cathode it is an advantage to place the same direct in the proximity of the gas inlet or at the sealing points of the apparatus. It has been found especially effective to connect the purifying cathode with the gas inlet. The inlet of the gas through the purifying cathode had to be covered with a grid or filter of very fine mesh, in order to prevent discharges in the supply pipe. The gas enters direct into the discharge, whereby the impurities are held on to the magnesium cathode. By using these arrangements for the continuous removal of the impurities during disintegration while using, for instance, noble gases, it is possible to obtain pure firmly adhering coatings of close texture by disintegration. It has been found especially advantageous to effect a purification while coating metal articles which have been heated by the discharge, for instance to 200 to 1,000° C and which, therefore, more especially in the case of light metals, form chemical compounds with the impurities of the filling gas on their outer zone, which chemical compounds ensure the adhesion of the disintegrated metal which is coated on at the same time. The introduction of the purifying electrode has, moreover, the advantage that, owing to the unavoidable leakages of

an apparatus as used in practice, the incoming undesirable gases, such as oxygen and nitrogen, are continually bound, so that it was possible with one single gas filling to effect a coating, even over long periods of time, without any change in pressure, that is to say, while the gas was in a stationary state. With a purifying electrode having its own circuit the speed of consumption can be so regulated that the air which leaks in is continually bound. Also when the articles are heated by the gas discharge the gas liberated can be removed from the filling gas continually by the regulation of the power applied to the purifying electrode. If the purifying electrode is operated together with the disintegration electrode, its surface is made so large that, with the disintegration power required on the discharge path, in addition to the impurities being continually bound, also noble gas is bound. In the case of a cathode disintegration apparatus, as used in practice for engine pistons, it was, for instance, easily possible to bind continually in addition to the impurities also small amounts of noble gas. The capacity of the apparatus was about 6 litres at atmospheric pressure; during a period of operation of 4 hours and with a vacuum of 0.1 mm Hg 1 $cm^3$ of argon at 760 mm Hg was continually supplied through a diffusion valve. In addition to the energy for the operation of the pumps with forced passage or circulation through special purification plant one economises, in the case of this process, in the expensive noble gases, since one is able to carry out the operation at constant pressure with small amounts and for many hours.

The accompanying drawings illustrate diagrammatically and by way of example four different modes of carrying the invention into effect.

Figure 1 is a section through a gas discharge purifying plant;

Figure 2 is a section through a cathode disintegration plant with gas discharge purifying apparatus through which the filling gas circulates;

Figure 3 is a section through a chamber for the metallisation of articles by cathode disintegration which is provided with a separate purifying device for the filling gas or gas remainder present in the disintegration chamber; and

Figure 4 is a section through a cathode disintegration chamber in which the wall of the vessel constitutes the cathode and a portion of the wall of the vessel is constructed as a gas purifying electrode.

Referring to Figure 1, the gas which may for instance have to be freed of oxygen and nitrogen is contained in the bottle 1 and passes through a valve 2 into the water separator 3 from which it goes past the regulating valve 4 and the hollow and coolable lead-in conductor 5 into the gas discharge chamber 6, in which the gas is freed of oxygen, nitrogen or like undesirable constituents by vaporised magnesium or magnesium alloys, such as elektron. By means of a pump 7 the purified gas can be circulated through the purifying apparatus. The purified gas is supplied to the storage container or consuming apparatus through the valve 19 and the vacuum pump 18. The vacuum pump 18 enables a pressure of about 30 to 0.001 mm, preferably 3 to 0.1 mm Hg, to be obtained in the purifying chamber. A cooling medium may be supplied through the pipe connection 8 to the current lead-in 5 and be discharged through the pipe connection 9. The wall of the gas discharge chamber 6 and the electrode 10 consist of magnesium or magnesium alloys, such as elektron. The source of continuous or alternating current voltage 11 having preferably a voltage of 200 to 1,000 volts is connected, on the one hand, over an adjustable resistance 12 to the gas discharge chamber and, on the other hand, over a switch 13 to the current lead-in 5 and the metal 10 to be vaporized. 14 is an insulating ring and 15 an insulating and clamping ring which is clamped on by means of screws not shown. 16 is the bottom plate and 17 an inspection window. The operation of the purifying device is such that the magnesium, preferably vaporised at pressures of 3 to 0.1 mm Hg, binds the oxygen and similar impurities.

The wall of the purifying apparatus may be cooled. It is, however, an advantage to heat it by the gas discharge, to such a temperature that the magnesium which is vaporised thereon is vaporised again. At temperatures of over 300° C the time for the purification of, for instance argon, having the same admixtures, is substantially shorter as compared with the cooled electrodes. Over 400° C commences a very intensive vaporisation of the magnesium, so that not only are the impurities quickly removed but a spectrum pure argon is also bound by the magnesium vapour which is condensing.

Referring to the construction shown in Figure 2, 1 is the cathode disintegration chamber with the cathode 2 to be disintegrated and the article 3 to be metallised, 4 being the source of continuous or alternating current which is connected, on the one hand, through a switch 5 and an adjustable resistance 6 to the coolable screened and insulated cathode 2 and, on the other hand, with the screened and insulated anode 7. The screening of the cathode is effected by the metal screen 8 which is arranged at a short distance from the cathode. The screening of the anode is effected by the metal covering 9 which is arranged at a short distance from the anode. A vacuum pump is connected to the pipe connection 10, by means of which a vacuum of about 10 to 0.001 mm, preferably 5 to 0.1 mm Hg, is maintained in the cathode disintegration chamber. The purified filling gas, for instance argon or hydrogen, is introduced through the regulating valve 12 and pipe connection 11. The filling gas which is contained in the bottle 13 comes through a valve 14 into the water separator 15, from which it flows through the valve 16 and a hollow and coolable current lead-in 17 into the gas discharge purifier 18, in which it is liberated of oxygen, nitrogen and similar undesirable constituents by disintegrated and/or vaporised magnesium or magnesium alloys, such as elektron. By means of the pump 19 the purified gas can be circulated through the cathode disintegration apparatus 2 and the gas discharge purifier 18. A cooling medium may be supplied to the current lead-in through the pipe connection 20 and be discharged through the pipe connection 21. The wall of the gas discharge purifier 18 and the electrode 22 consist of magnesium or magnesium alloys, such as elektron. The source of continuous or alternating current voltage 23 having a voltage of preferably 200 to 1,000 volts is connected, on the one hand, through an adjustable resistance 24 to the wall of the purifier and, on the other hand, through the switch 25 to the current lead-in 17 and the counter-electrode 22. 26 is an insulating ring and 27 an insulating and clamping ring which is clamped on by means of screws, not shown. 28 is the bottom plate and 29 an inspection window. The operation of the purifying device is such that the magnesium disintegrated,

preferably at pressures of 10 to 0.001 mm Hg, binds the oxygen and similar impurities. The electrode 22, as well as the wall of the purifying apparatus may be cooled. It is, however, an advantage to heat them by the gas discharge to such a temperature that magnesium is appreciably vaporised. At temperatures of over 300° C the purification of, for instance, argon having the same impurities can be effected during a much shorter period of time as compared with cooled electrodes. Beyond 400° C there begins a much more intensive vaporisation of the magnesium so that, not only are the impurities quickly removed but a spectrum pure argon is also bound by the condensing magnesium vapour.

The cathode disintegration chamber according to Figure 3 comprises a bottom part 1 and a removable upper part 2 which are connected together in an airtight manner by means of the packings 3 and 4. The cathode 5 to be disintegrated and which may consist of, for instance, copper or silver, is mounted in the upper part on a hollow coolable current lead-in 6. A cooling medium is supplied through the pipe 7 and discharged through the pipe 8. The coolable current lead-in is screened by means of a screen 10 through the interposition of a narrow screening gap 9. The screening gap is so narrow that no glow discharge can take place therein. 11, 12 and 13 are insulating bodies and 14 is a packing ring, whilst 15 is a screw ring for clamping purposes.

A cooling channel 16 is provided in the bottom plate and a pipe 17 is used for the purpose of supplying a filling gas in a regulated amount. A vacuum pump, which is not shown, is connected to the pipe connection 18, being used to produce a vacuum of, for instance, 30 to 0.001 mm, preferably 5 to 0.1 mm Hg. The pipe connections 17 and 18 are provided with protecting sieves 19 and 20 for the purpose of keeping back electrical discharges which may take place in the cathode disintegration chamber. The article 21 to be metallised rests on a metal plate 22 which is supported by the current lead-in 23. 24 is a purifying electrode connected up as a cathode according to the invention, and consists of, for instance, magnesium or magnesium alloy, being insulated by the narrow screening gaps 25 and 26. 27, 28 and 29 are insulating and packing rings, of which the outer ring 29 is clamped on by screws which are not shown. 30 and 31 are sources of continuous or alternating current voltage for the disintegration and purification, while 32 and 33 are regulating resistances and 34, 35, 36, 37 and 37*a* are switches which are connected up according to requirements. The article may be connected up in an electrically-insulated manner and the vessel as an anode. The article and the vessels may serve at the same time as anode. However, the wall of the vessel may be connected up as a purifying cathode. The operation of the apparatus is such that the purified cathode 24 removes, for instance, the impurities such as oxygen, from the filling gas which is present in the cathode disintegration chamber.

The cathode disintegration chamber with the purifier according to Figure 4 consists of a coolable bottom plate 38, which is provided with a cooling channel 39 to which a cooling medium is supplied through the pipe connection 40, being discharged through the pipe connection 41. On the bottom plate there is placed the upper part 42, which is connected up as the cathode to be disintegrated, consisting for instance of aluminium, the said upper part being mounted thereon through the intermediary of the seal 43 in a gastight manner and provided with a cooling jacekt 44. 45 is an inspection window, which may be cooled by the cooling channel 46 to which a cooling medium may be supplied through the pipe connection 47 being discharged by the pipe connection 48. The inspection window rests in an annular supporting metal member 49 which is screened and insulated by a narrow screening gap 50 with respect to the wall of the vessel connected up as a cathode. The purifying member 51 is mounted in the bottom plate 38, being connected up as a cathode and forming a part of the wall of the chamber; it preferably consists of magnesium or a magnesium alloy, such as elektron. The article to be metallised, for instance, a piston 52, which may be connected up as an anode or be electrically insulated, is supported on a hollow current lead-in 53 by means of a pipe connection 54, which current lead-in serves at the same time as a supply and discharge for the filling gas. The filling gas is supplied through the pipe connection 55, being discharged through the pipe connection 56 to which the vacuum pump (not shown) is connected.

A pressure gauge (not shown) is connected to the pipe connection 57. The current lead-in is made coolable, the cooling medium being supplied through the pipe connection 58 and discharged through the pipe connection 59. 60, 61, 62 are insulating and packing rings and 63 is a clamping ring which is clamped on by means of screws, not shown. 64 is a source of continuous or alternating current voltage and 65 is a switch and 66 an adjustable resistance.

A narrow screening gap 67 is provided between the insulating member 60 and the current lead-in.

BERNHARD BERGHAUS.
WILHELM BURKHARDT.

PUBLISHED
MAY 18, 1943.
BY A. P. C.

B. BERGHAUS ET AL
PURIFICATION OF GASES
Filed July 7, 1939

Serial No.
283,312
4 Sheets-Sheet 1

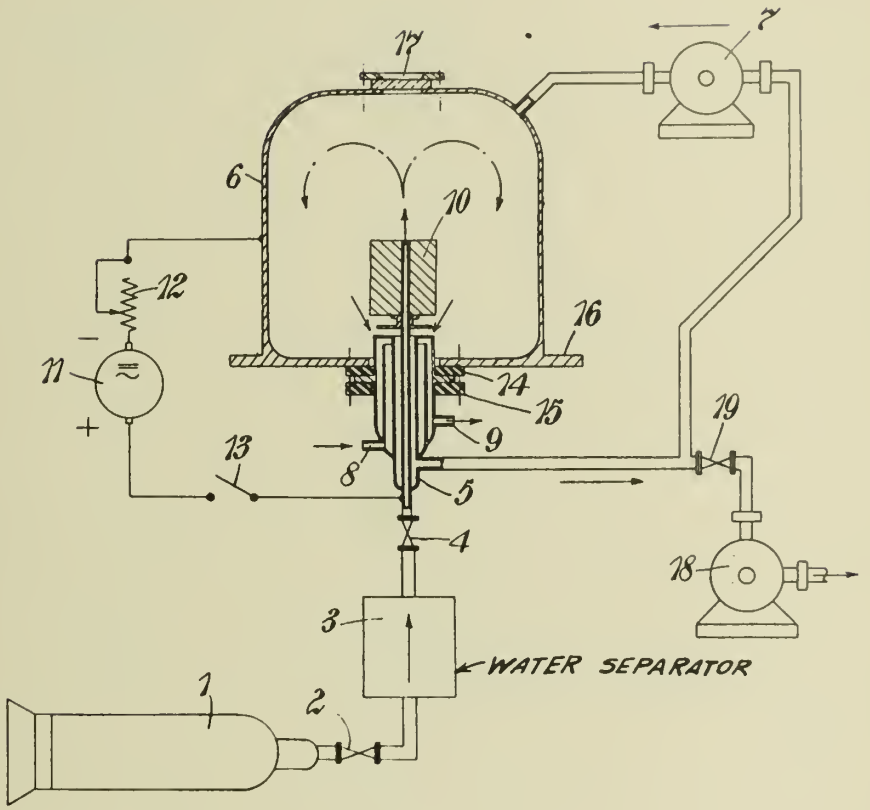


Inventors
B. Berghaus
W. Burkhardt

By: Glascock Downing & Seibold
Attys.

PUBLISHED
MAY 18, 1943.
BY A. P. C.

B. BERGHAUS ET AL
PURIFICATION OF GASES
Filed July 7, 1939

Serial No.
283,312
4 Sheets-Sheet 2

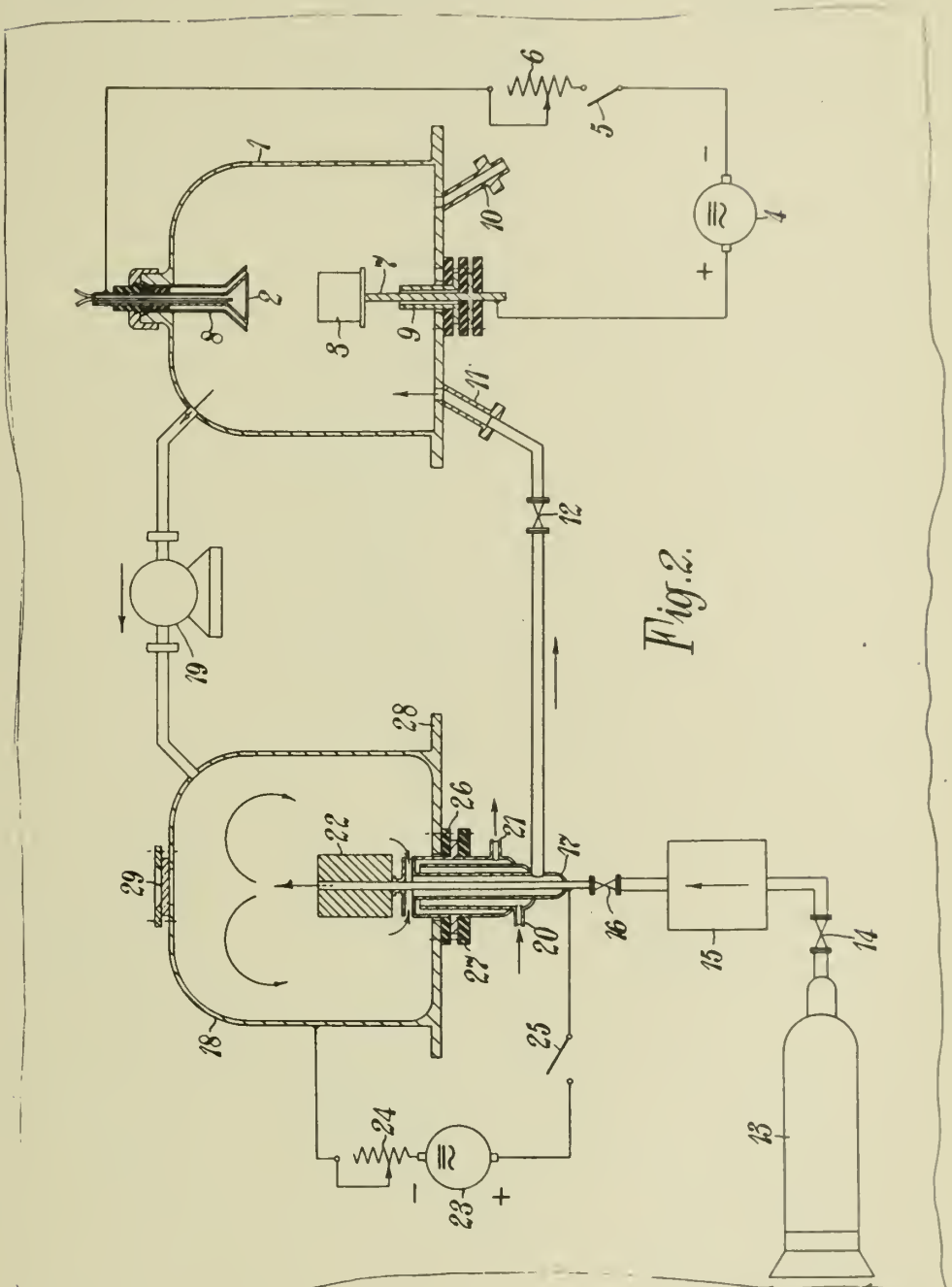


Fig. 2.

Inventors
B. Berghaus
W. Burkhardt
by: Glascock Downing & Seebold
Attys.

PUBLISHED
MAY 18, 1943.
BY A. P. C.

B. BERGHAUS ET AL
PURIFICATION OF GASES
Filed July 7, 1939

Serial No.
283,312
4 Sheets-Sheet 3

Fig. 3

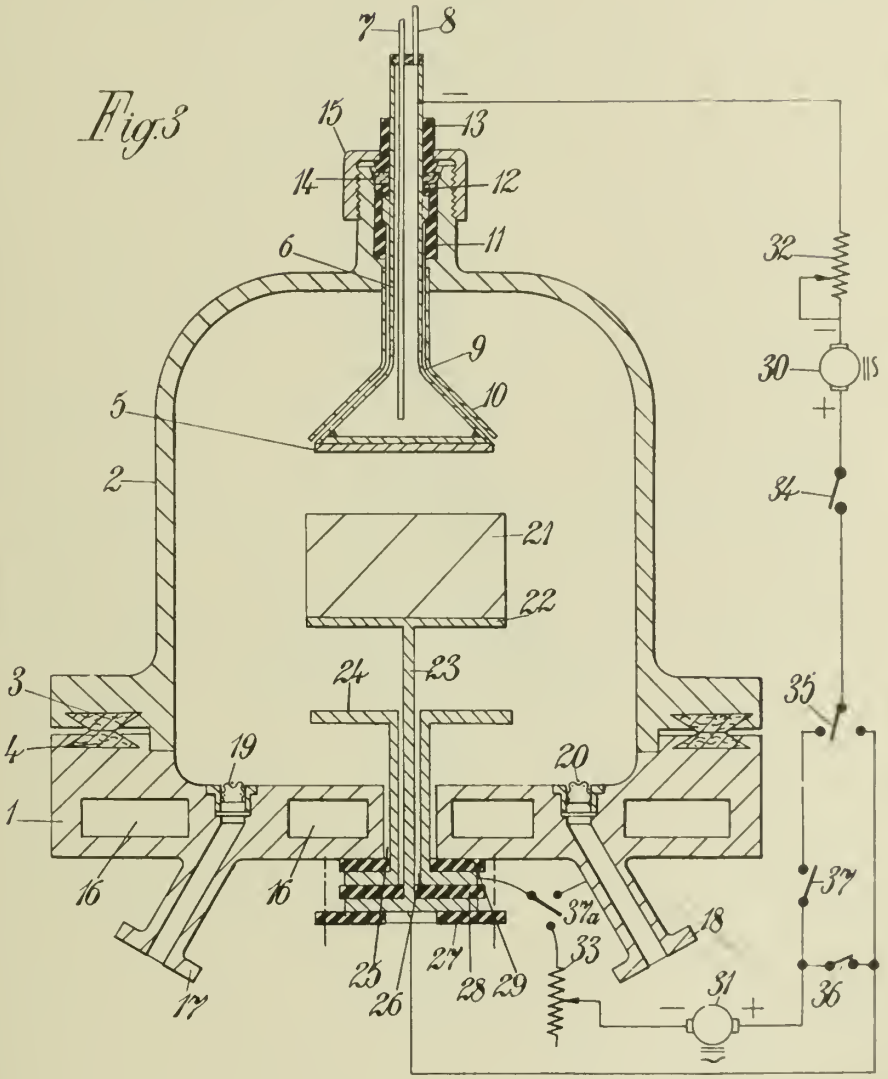


Inventors,
B. Berghaus
W. Burkhardt

By: Glascock Downing & Seebold
Attys.

PUBLISHED
MAY 18, 1943.
BY A. P. C.

B. BERGHAUS ET AL
PURIFICATION OF GASES
Filed July 7, 1939

Serial No.
283,312
4 Sheets-Sheet 4

Fig. 4

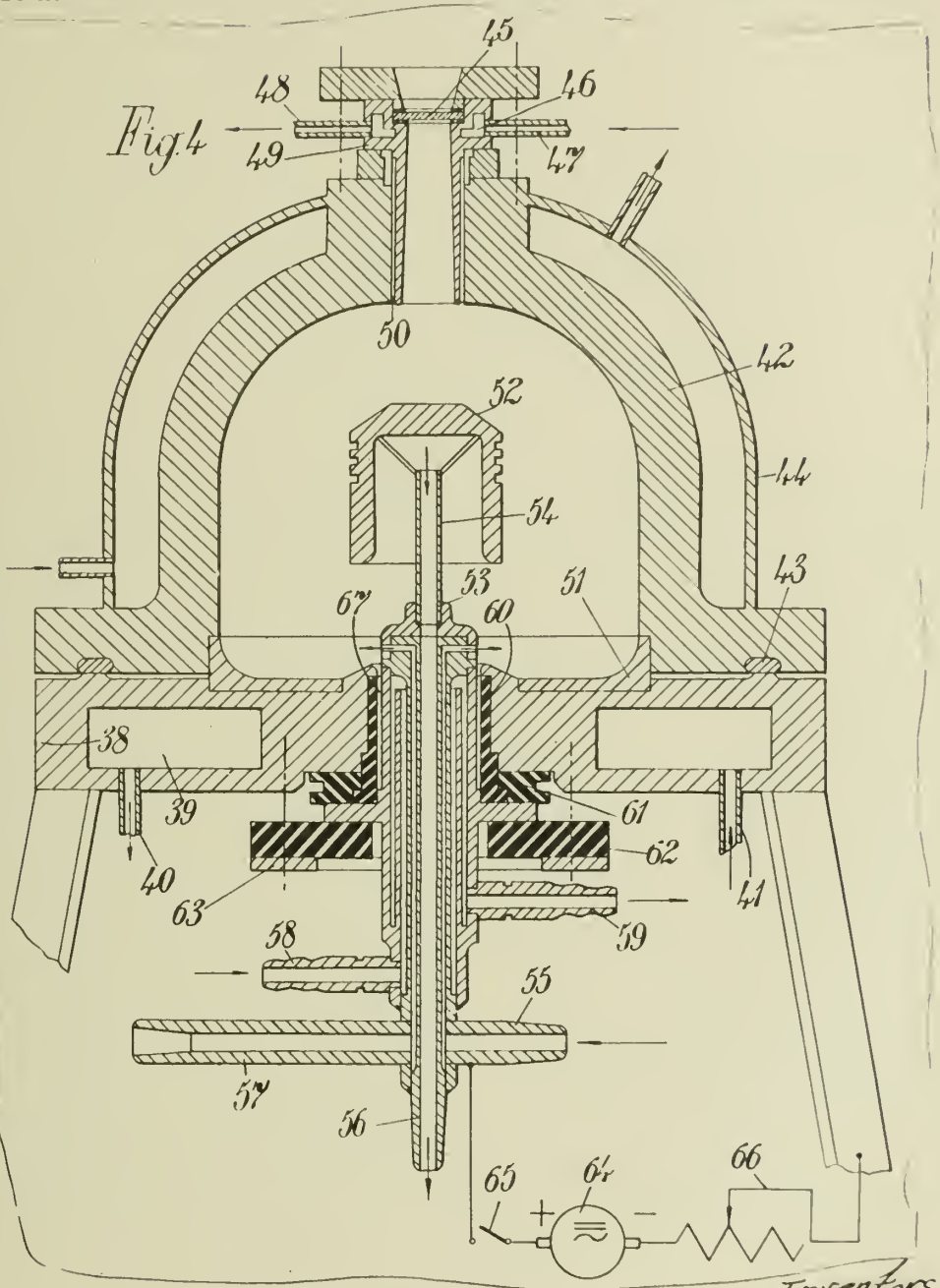


Inventors,
B. Berghaus
W. Burkhardt
by: Glascock Downing & Seibold
Attys.

Published May 18, 1943

Serial No. 283,990

# ALIEN PROPERTY CUSTODIAN

## BUSHING FOR ELECTRIC SUPPLY CONDUCTORS LEADING TO THE ELECTRIC MOTOR ARRANGED IN THE CASING OF A REFRIGERATING APPARATUS

Peter Pfaff and Erich Schwarz Von Bergkampf, Berlin-Siemensstadt, Germany, vested in the Alien Property Custodian

Application filed July 12, 1939

This invention relates to a bushing for the leads extending to the electric motor serving to drive the compressor, which bushing is secured to a housing of the refrigerating apparatus. Such bushings must be so designed that they remain in operation for years with practically no attention and without giving rise to any trouble as to the sealing of the refrigerating apparatus. This may be accomplished according to the invention in a particularly simple manner by sealing all current carrying conductors into a common body of glass or similar material surrounded by a metal sleeve and by hermetically closing the opening provided for the bushing in the housing of the refrigerating apparatus. To this end, the bushing is soldered or welded to the wall of the housing. The arrangement of all conductors in a common insulating body of glass or similar material is particularly advantageous in that the method of manufacture is greatly simplified, since a common metal sleeve is only necessary for the passage of all supply conductors, for which purpose only a single aperture need be provided in the housing of the refrigerating apparatus. As this sleeve is sealed into the housing by the soldering or welding method an absolutely hermetic joint may be obtained. The metal sleeve is preferably so designed that the soldered joint or weld is arranged exteriorly of the housing at one end of the sleeve, whereas the common insulating body of glass or the like through which pass the electric supply conductors is arranged at the other end of the sleeve. In this manner the insulating body of glass which is sealed into the sleeve before securing the latter to the housing cannot be impaired by the heat developed during the welding or soldering operation.

In the accompanying drawing is shown an embodiment of the invention in diagrammatic form. 1 denotes the compressor housing. The compressor set driven by the electric motor (not shown) is arranged inside the housing 1. The current supply conductors are denoted by the reference numerals 3, 4, 5 and are sealed into a common insulating body 6 of glass or similar material arranged in a sleeve 7. The glass body 6 is placed in the embodiment shown at the right-hand end of the sleeve, whereas the left-hand end 8 thereof is inserted in a corresponding opening of the compressor housing 1 and hermetically soldered or welded. The ends of the conductors 3, 4, 5 inside the compressor housing are provided with cable sockets 9, 10, 11 to which are connected the conductors leading to the motor (not shown). The right-hand ends of the conductors 3, 4, 5 pass through a cover 12. The space 13 between the cover 12 and the glass body 6 is filled up with a suitable insulating material.

PETER PFAFF.
ERICH SCHWARZ 1. BERGKAMPF.

PUBLISHED

MAY 18, 1943.

BY A. P. C.

P. PFAFF ET AL

BUSHING FOR ELECTRIC SUPPLY CONDUCTORS LEADING TO THE ELECTRIC MOTOR ARRANGED IN THE CASING OF A REFRIGERATING APPARATUS

Filed July 12, 1939

Serial No. 283,990

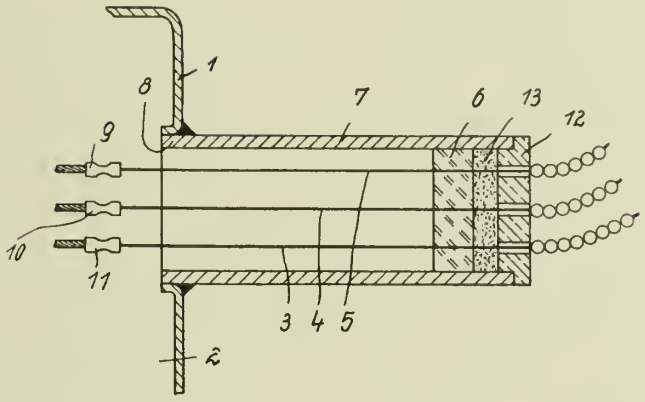


Inventors:
Peter Pfaff and
Erich Schwarz von Bergkampf
By: Richardson & Gale
Attys.

Published May 18, 1943 Serial No. 285,112

# ALIEN PROPERTY CUSTODIAN

## DEVICE FOR STARTING AND FEEDING ELECTRIC DISCHARGE TUBES

Jean Lecorguillier, Suresnes, France; vested in the Alien Property Custodian

Application filed July 18, 1939

For feeding an electric discharge tube it is well known to connect its electrodes to an alternating current supply through the intermediary of a reactance coil which ensures stable working conditions. The presence of this reactance coil diminishes the power factor of the installation, but it may easily be brought as close to unity as desired by means of a condenser connected across the terminals of the assembly formed by the tube and the reactance coil.

Such an installation necessitates that the line voltage shall be sufficiently high to effect starting of the tube without difficulty. Otherwise, more or less complicated starting circuits must be provided.

The object of the present invention, which relates to this last mentioned case, is to produce a circuit arrangement which for the functioning of the tube possesses the advantage of that described above, and allows furthermore a starting of the tube to be obtained with great simplicity.

According to the invention, in a circuit arrangement for starting and feeding an electric discharge tube by means of an alternating current supply source, comprising a reactance coil in series with the tube and a condenser connected across the terminals of this assembly, there is added to the circuit including the tube the reactance coil and the source of feed current, between one of the terminals of the said source and one of the terminals of the condenser, a second reactance coil intended to produce in combination with the said condenser, an over-voltage between the electrodes of the tube which is sufficiently high to start the tube, means being provided for putting out of working the circuit of the said second coil once the starting of the tube is effected.

The annexed drawing furnishes by way of non-limitative example an installation diagram according to the present invention.

In the drawing, **1** illustrates a luminescent discharge tube, **2** and **3** are two reactance coils, **4** is a condenser, **5** a switch and the feed line voltage is applied at the terminals **6**.

Considering in the first place the functioning of this circuit when the tube is lighted; the coil **3** having been short-circuited by the closing of the switch **5**, the coil **2** ensures stabilization of the working conditions and the condenser **4** increases the power factor of the installation as hereinbefore mentioned. When the tube is extinguished, it is sufficient to open the switch **5** in order to constitute, by means of the reactance coil **3** and the condenser **4**, an oscillating circuit connected across the terminals of the line **6**; by suitably choosing the elements of this circuit a resonance effect is produced giving a much higher voltage at the terminals of the circuit **2**, **4** than the line voltage, and the tube is started. The duration of the over-voltage necessary to start the tube being very small, the opening of the auxiliary switch **5** is effected by means of a push button which is advantageous especially when the main switch of the installation (not shown) comprises a control of this kind. In these circumstances the mechanisms of the said two apparatuses may in fact be easily combined so that starting of the tube is ensured when the main switch is closed without the operator having to carry out further operations. The opening of the switch **5** may also be effected by means of a relay actuated by the feed current of the tube, and for this purpose numerous alternatives are equally possible.

Finally, if desired a certain amount of mutual induction may be produced between the reactance coils **2** and **3** by partially combining in known manner their magnetic circuits; in this manner a further regulating of the over-voltage produced at the moment of starting is obtained.

JEAN LECORGUILLIER.

PUBLISHED
MAY 18, 1943.
BY A. P. C.

J. LECORGUILLIER
DEVICE FOR STARTING AND FEEDING
ELECTRIC DISCHARGE TUBES
Filed July 18, 1939

Serial No.
285,112

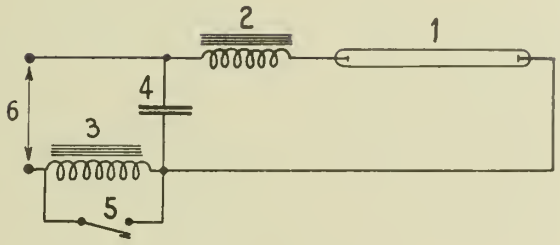


Jean Lecorguillier
Inventor

By Pennie Davis Marvin & Edmonds
Attorneys

Published May 18, 1943 Serial No. 285,310

# ALIEN PROPERTY CUSTODIAN

## ECHO-SOUNDING DEVICE WITH ARRESTED INDICATOR

Peter Orlich and Hans Hartz, Kiel, Germany;
vested in the Alien Property Custodian

Application filed July 19, 1939

For echo-sounding devices with stationary indication up to the present, optical indicating means have generally been used which travel over a scale and which flash at the moment of the arriving echo. These indicating means usually consist of a lighted spot produced by a Braun tube or a glow cathode or of an illuminated slot, the opening of which is controlled by mechanical means. The optical indicating means, however, have the disadvantage that they fail, if for some reason the echo does not arrive, so that the reading is thereby rendered difficult.

Furthermore, indicating devices for this purpose are known, which operate with an indicator hand, which permit a stationary reading. In these devices a rotating magnet field is used which is energized for a short time at the moment of the echo arriving and in the direction of which a magnetic hand adjusts itself. These devices, however, have the disadvantage which is inherent to all magnetic indicators, namely that they are subject to stray currents from outside and that errors are thereby introduced into the indication.

According to the present invention the aforementioned disadvantages are removed by using an indicating device which does not operate with a directly stationary indicator but by connecting the indicating device to echo-sounding devices of well-known type which permit only a momentary reading and which operate with a magnetic indicator. Such a device cannot be used directly for a continous indication, because it is necessary in these devices to return the indicator every time to zero after a sounding has been made. Devices of this character are constructed, for instance, in such manner that between a stationary and a rotary electromagnet an armature disc is disposed and mounted on a shaft which is axially movable and which is provided with an indicator hand. Thereby the disc is attracted by the rotary magnet at the moment when the sound is originally transmitted and attracted by the stationary magnet at the moment of the echo arrival.

According to the present invention a stationary indication is produced with an echo-sounding device of the above-described character by interposing between the rotary mechanical element and the indicator an electrical angle transmission device, and by coupling with the rotary mechanical element an electric contact which actuates the electric angle transmission for a short time at the moment when the echo arrives. In this manner the visible indicator hand is completely separated functionally from the echo-sounding device proper and the indicating device can be suitably damped so that it will not change its position in the time between two successive distant controls.

The invention is illustrated in the accompanying drawings, in which—

Fig. 1 represents semi-diagrammatically one form in which the invention may be reduced to practice.

Figs. 2 and 3 represent wiring diagrams of two modified forms of the circuit, Fig. 1.

Fig. 4 represents semi-diagrammatically a modification of the electromechanical arrangement shown in Fig. 1.

Fig. 5 represents in larger scale the face of the altitude or depth indicating instrument, and

Fig. 6 represents a block diagram of the entire measuring arrangement of the modification, Fig. 4.

Before referring in detail to the several modifications, it should be stated that the invention is useful not only in measuring depth of water by means of echo sounding, but also altitudes of aircraft or the like, in both cases the ground being used for producing the echo. Therefore, when the term "altitude" is used in the following description, it is meant to imply also depth of water, i. e. altitude of the craft above the bottom of the sea.

Referring to Fig. 1, in which the several elements are shown drawn apart for clearness sake, 1 represents a stationary annular electromagnet and 2 a similar annular magnet mounted on a shaft 3 so that it can be rotated in plane in parallel to the plane in which the annular magnet 1 is located. Shaft 3 is continuously rotated by a source of power capable of rotating the shaft continuously at uniform speed, such as for instance an electric motor 3a. Between the two electromagnets 1 and 2 is disposed an armature disc 6 mounted on a shaft 4 which is longitudinally movable in its bearings 5, 5. This shaft carries besides a yielding contact arm 7 insulated from the shaft and supplied with current from a supply contact arm 7a electrically connected with arm 7 and sliding on a stationary slide contact 8. The contact arm 7 is mounted on shaft 4 in such position that when the shaft is shifted longitudinally to the left in Fig. 1, it will contact with a toroid resistance coil 9 disposed in a plane in parallel to the plane of electromagnet 1. This resistance coil 9 is supplied with current from a source 10.

As described so far, the device operates as follows. By means of the elements 1 through 6, the traveling time of the echo is measured as a function of the traveled path of disc 6 during the

running of the echo in a manner shown and described, for instance, in the U. S. patent to Settegast et al, No. 2,032,893. The armature disc is normally attracted by the stationary magnet 11. When the signal which produces the echo is originally sent out, magnet 1 is deenergized and electromagnet 2 is energized so that armature 6 is at that moment released from magnet 1 and attracted by magnet 2 so that it commences to rotate with the latter. The arrangement of this prior art device is such that at the moment of the arrival of the echo, rotary magnet 2 is deenergized and stationary magnet 1 is reenergized whereby armature 6 is arrested. The angular distance which shaft 4 has traveled during the echo-traveling time is used for moving contact arm 7 from an original position at the moment of sound transmission on annular resistance 9 to another position at the arrival of the echo. If contact 7 is in contact with annular resistance 9, which is supplied with current from source 10 and acts as a potentiometer, a current flows from arm 7 by way of contact 8, conductor 11, lead $12^a$, galvanometer coil 12, lead $12^b$, switch contact $15^a$ back to resistance 9, the intensity of which current depends upon the position of the contact on annular resistance 9. As previously stated, this resistance, together with arm 7, acts as a potentiometer. Coil 12 may be placed any desired distance from the actual echo-sounding device 1 through 9 previously described. Between two soundings contact arm 7 is returned to the zero position in a manner known in the art and shown, for instance, in the aforementioned U. S. patent.

The locking distance-indicating device, of which the aforementioned coil 12 is a part, consists in the present example of coil 12 rotatably disposed on an arbor on which an indicator hand 13 is mounted. Cooperatively mounted with hand 13 is an annular electromagnet 14 which is normally energized from source 10 so long as relay 15 attracts its switch armature $15^a$ and thereby maintains the energizing circuit closed. The relay is controlled so that it drops its armature at the moment when the rotating magnet 2 releases its armature 6, so that at this moment also magnet 14 is deenergized. So long as magnet 14 is energized, it holds indicator hand 13 attracted, wherever it happens to stand. For this purpose, hand 13 is either made of magnetic material or it is provided with a small armature 16 which is located closely adjacent to the magnet. 17 represents a scale mounted on magnet 14, and which is graduated in sounding altitude or depth units as the cas may be.

The sounding time-measuring device 1 to 6, as well as the indication transmitting arrangement, may be substituted according to the invention also by other means. For instance, the circuit arrangement for transmitting the angular position of the contact arm 7 after the arrival of the echo may be arranged in the manner shown in Fig. 2. In this figure, 18 represents the annular resistance such as 9 in Fig. 1, and 19 represents the equivalent of contact arm 7 of Fig. 1. 20 is a long distance receiver 21, 22 and 23 are fixed resistances, approximately of the order of the annular resistance 18, and 24 represents a source of current. This arrangement constitutes a Wheatstone bridge and has the advantage that the scale of the instrument 20 may be divided linearly.

The arrangement, however, may also be made as shown in Fig. 3, in which the fixed resistances 21 and 22 are omitted and in which resistance 23 is formed as a second annular resistance similar to 18 and is provided with a sliding contact 25. This sliding contact 25 is mechanically connected with the receiving instrument 26 in such manner that it follows up the motion of contact arm 19 until the current in the bridge branch 19, 26, 25 equals zero. Such an arrangement has the advantage that it is insensitive against voltage variations of source 24. Besides, it is possible in such a case to bring about the contact between arm 7 as in Fig. 1, or arm 19 as in Fig. 3, with its appertaining annular resistance, not mechanically by shifting the shaft as described with reference to Fig. 1, but magnetically by an annular magnet which attracts the contact arm 7, in this case made of magnetic material, and thereby brings about its contact with the annular resistance 9.

Furthermore, in place of the long distance angle transmission shown and described with reference to Figs. 1 to 3, any other suitable angle transmission device may be used, such as with the aid of photocells. Finally, in place of the arresting magnet 14 in Fig. 1, any other arresting device may be used which holds the indicator hand in its position during the time when no long distance indication occurs.

It may be desirable at times to modify the arrangement according to the invention, and as described so far, in such manner that the electric contact at the annular resistance, such as 9 in Fig. 1, remains permanently at the point at which it has been brought by the arrival of a first echo until a second echo has arrived, at which time it is moved to a new point according to the running time of the second echo. Thereby the differences in running time between the two echoes can be ascertained. The manner in which such an arrangement may be reduced to practice is shown in Fig. 4. In this figure, 27 represents a rotating electromagnet operated by the electric motor 28 at constant speed. Opposite electromagnet 27 is mounted the stationary annular magnet 29, and between the two magnets is disposed the disc armature 30 which in turn is fixed at one end of an axially movable shaft 31. At the other end of shaft 31 is fixed a heart cam 32. In parallel to heart cam 32 and in axial alinement with shaft 31 is mounted an annular resistance 34 of the type described with reference of Fig. 1, which forms part of an angle transmission device. Within annular resistance 34 is disposed an armature disc 33 whose plane is in parallel to heart cam 32 and which is mounted at the end of a shaft 40 disposed in axial alinement with shaft 31. Armature disc 33 carries a sliding contact 35 which cooperates with annular resistance 34. Armature 33 furthermore carries at its side facing heart cam 32 a rotatable lever 36 at the end of which is disposed a roller 37 which rolls on the periphery of heart cam 32. Lever 36 is held in contact with the cam by means of a spring 38, fixed at its other end on disc 33. In parallel to the plane of armature disc 33 is disposed a stationary annular electromagnet 39 so that it can control the rotation of armature disc 33 by permiting its free rotation when the electromagnet is deenergized, and arresting the rotation by attracting the disc when the electromagnet is energized. The energizing circuit of electromagnet 39 is not shown here but assumed to be arranged so that it is energized and deenergized respectively at the same time when the rotary magnet 27 is energized and deenergized. The free end of shaft 40 carries an

indicator hand 41 which travels over a scale 42. Contact 35 of disc 33 is included in a circuit containing the annular resistance 34, a fixed resistance 43 and an electric measuring instrument 44.

This indicating instrument operates as follows. When a sound impulse is sent out, electromagnet 29, previously energized, is deenergized and electromagnet 27 is energized, so that armature disc 30 is taken along by the latter and thereby also heart cam 32 is rotated. Since, as previously stated, electromagnet 39 is energized simultaneously with magnet 27, armature disc 33 is held attracted by electromagnet 39, and thereby the spring 38 is put under tension by the rotation of heart cam 32. When the echo arrives, the exciting current of magnets 27 and 39 is interrupted, and at the same time the armature disc is reattracted by stationary electromagnet 29, which in the same manner as described with reference to Fig. 1 is now reenergized. Thus the heart cam is arrested and armature disc 33 is released and free to rotate. Now the tension of spring 38 exerts itself and tends to set the roller 37 of lever 36 to the lowest point of heart cam 32 as shown in Fig. 4. This will rotate disc 33 a corresponding angular distance. Shortly before the next sound impulse is sent out, magnet 39 is reenergized and thereby reattracts disc 33 and arrests it in the position which it has assumed after roller 37 had reached the lowest point of the heart cam. After the arrival of the next echo, disc 33 is merely turned to the new position in which the heart cam 32 had arrived after the arrival of the new echo. Thus the different angular positions which armature disc 33 assumes at the arrival of the several echoes are transmitted as currents of different potentials, by contact 35 and resistance 34 which together with the contact acts as a potentiometer, to the distant electrical instrument 44 which is calibrated in depth or altitudes. By suitably choosing the value of fixed resistance 43 it becomes possible to maintain the angular indication of the electric measuring instrument 44 proportional to the angular position of the potentiometer contact 35.

It is also possible, of course, instead of using a single heart-shaped cam and a single lever such as in Fig. 4, to use several of such cams and levers symmetrically mounted on their respective supports in order to avoid a one-sided pressure against shaft 31. Furthermore, it may also be desirable some time, instead of using an electric indicating instrument 44, to use a recording instrument which may also be used together with the indicating instrument.

When exercising the invention the following should be taken into consideration. The indicating instrument is in general arranged so that the transmission of the original sound occurs when the indicating element travels through the zero point of the scale, which would mean zero depth or height as the case may be. However, the zero point of the scale, which is disposed either ahead of or behind the indicator, does not always coincide with the zero point of the indicator or of the indicating instrument itself. This occurs when the transmitter and/or receiver is not located at the lowest point of the craft, the distance of which above ground is to be measured. This is the case in particular in echo-sounding devices which are arranged on aircraft. In this case, the transmitter as well as the receiver are frequently mounted in the wings of the craft, and are thereby removed a considerable distance from the lowest point of the craft, for instance from either the landing wheels or the pontoons. In order to avoid confusion in the operator's mind between the zero point of the indicating instrument and the zero point of the scale, the indicator is made ineffective for indicating purposes within the sector of the indicating instrument between the zero point of the instrument and the zero point of the scale. This may be attained, for instance, by covering the sector in question by means of a screen which is disposed in front of the indicator and preferably made a part of the casing of the instrument.

In Fig. 5 such an arrangement is shown. In this figure, 45 represents the indicating instrument of the sounding device provided with a scale 46 over which an indicator hand 47 travels. In the central part of the instrument a screen 48 is arranged which covers the scale 46 and hand 47 through a given angle. This sector covers an area which is located between the dash line 49 and the zero point of the scale. The indicating instrument is built so that when hand 47 or a traveling adjusting device for hand 47 passes through the point represented by dash line 49, the sound emission occurs so that thus line 49 represents the zero point of the indicating mechanism itself.

Such an arrangement may also be useful, for instance, in echo-sounding devices which have light points traveling over a scale. If a rotating optical indicator is used, this indicator may also be removed from the operator's observation by interrupting the current which energizes the optical indicator, and this can be accomplished, for instance, by means of a cam which controls the contact of the circuit through which the optical indicator is supplied with current.

It is further desirable to operate the entire echo-sounding system according to the invention by means of a controlled motor which is constructed as a single armature converter, preferably as a direct current-direct current converter. It is well known that in echo-sounding arrangements of this type, besides the receiver, frequently an amplifier is also required. This amplifier requires a constant operating voltage which in most cases is different from the available line or battery voltage. If now the driving motor of the sounding system is constructed as a converter of the type aforementioned, the different operating voltages can be derived from the generator portion of the converter. Thus, special anode batteries or current transformers may be eliminated.

Such a converter may, of course, be used at the same time for any auxiliary devices which are connected with the indicating device and which likewise require constant operating voltages.

In Fig. 6, an echo-sounding arrangement in connection with a converter current supply is shown in the form of a block diagram. In this figure, 50 represents the sound transmitter which is connected with the fixed electromagnet 51 of an echo-sounding device 52, for instance of the type shown in Fig. 4 and which is controlled by means of a signal controller 53. The echo-sounding device 52 is operated by way of a gear train 54 from a motor 55 which is constructed as a direct current-direct current single armature converter. The motor is maintained at constant speed by means of the speed regulator 56 which may be of any conventional construction known in the art. From this motor, which is

supplied with current from the line **64**, a generator line **57** extends to the amplifier **58** which requires constant anode voltage. The necessary cathode heating current is supplied to the amplifier from the main line by way of supply line **59**. The amplifier is connected by way of line **60** with the sound receiver **61**. The latter is connected by way of the amplifier and line **62** with the rotary electromagnet **63** of the echo-sounding device.

A particular advantage of the arrangement according to Fig. 6 resides in the fact that in this manner considerable space is saved which is particularly important in aircraft or in sounding devices mounted in submarines.

PETER ORLICH.
HANS HARTZ.

PUBLISHED MAY 18, 1943. BY A. P. C.

P. ORLICH ET AL

ECHO-SOUNDING DEVICE WITH ARRESTED INDICATOR

Filed July 19, 1939

Serial No. 285,310

4 Sheets-Sheet 1

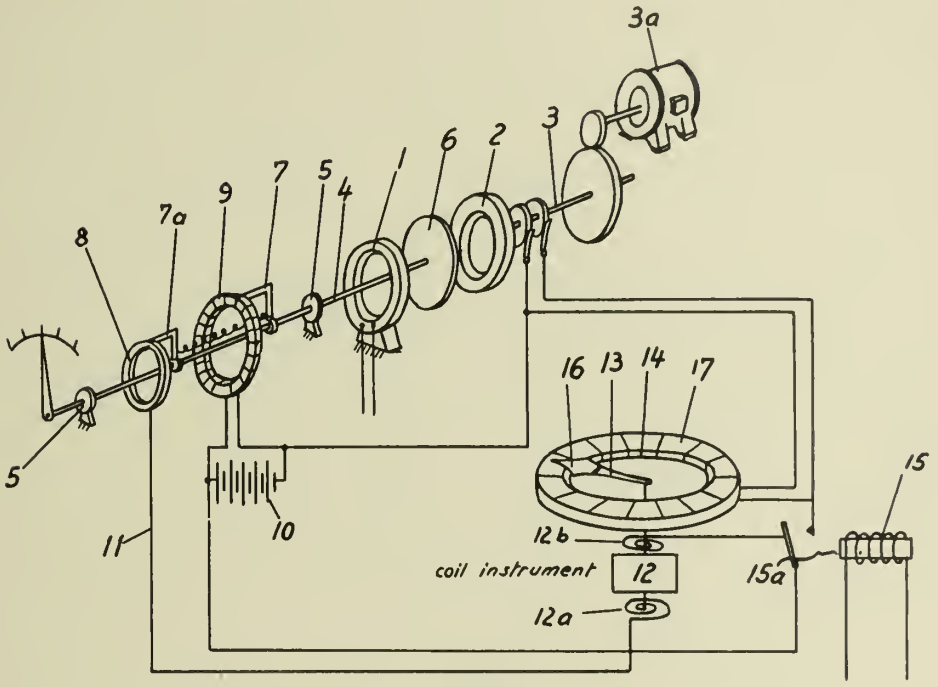


Fig. 1

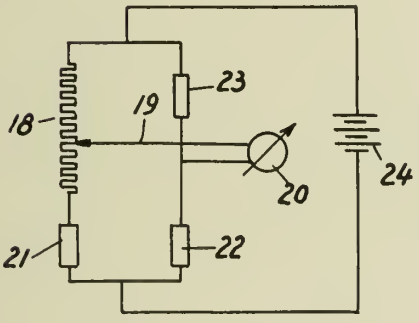


Fig. 2

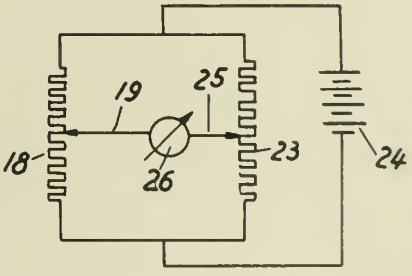


Fig. 3

Peter Orlich
Hans Hartz
Inventors
by Knight & Attys.

PUBLISHED MAY 18, 1943. BY A. P. C.

P. ORLICH ET AL

ECHO-SOUNDING DEVICE WITH ARRESTED INDICATOR

Serial No. 285,310

Filed July 19, 1939

4 Sheets-Sheet 2

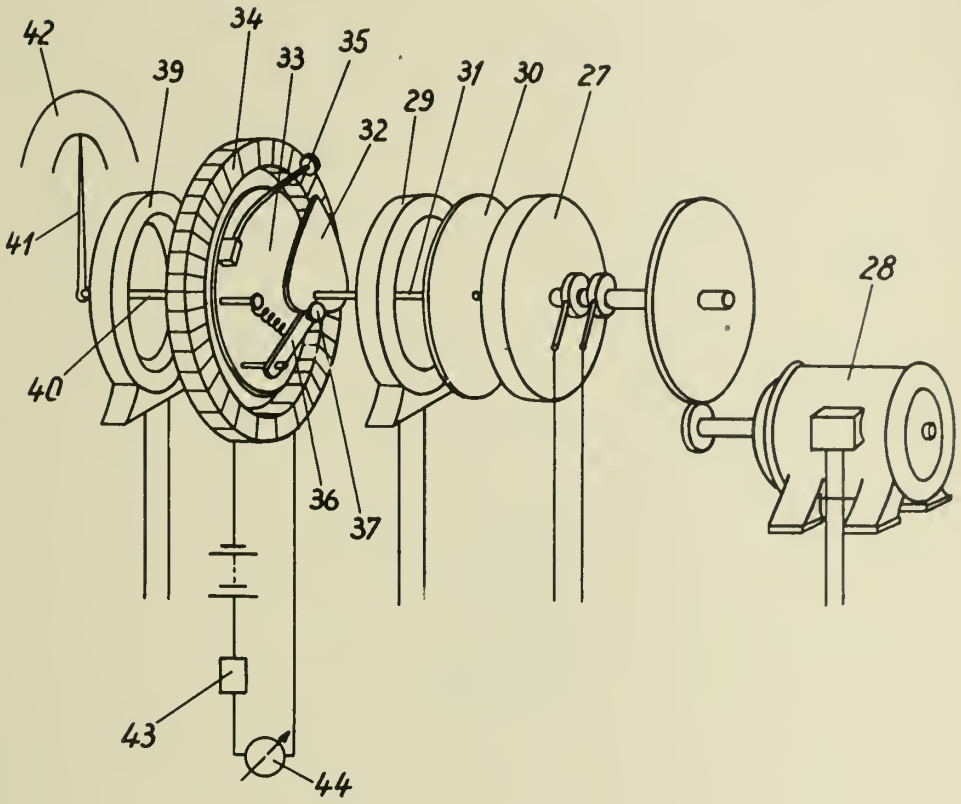


Fig. 4

Peter Orlich
Hans Harty
Inventors
by Lindquist
Att'y.

PUBLISHED MAY 18, 1943. BY A. P. C.

P. ORLICH ET AL

ECHO-SOUNDING DEVICE WITH ARRESTED INDICATOR

Filed July 19, 1939

Serial No. 285,310

4 Sheets-Sheet 3

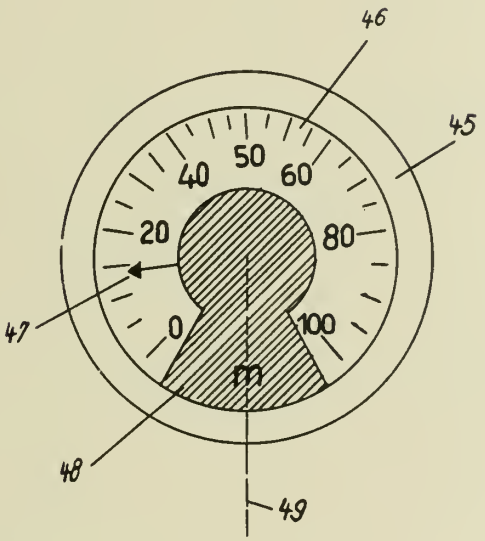


Fig.5

Peter Orlich
Hans Hartz
Inventors
by Lincoln
Atty.

PUBLISHED MAY 18, 1943. BY A. P. C.

P. ORLICH ET AL

ECHO-SOUNDING DEVICE WITH ARRESTED INDICATOR

Filed July 19, 1939

Serial No. 285,310

4 Sheets-Sheet 4

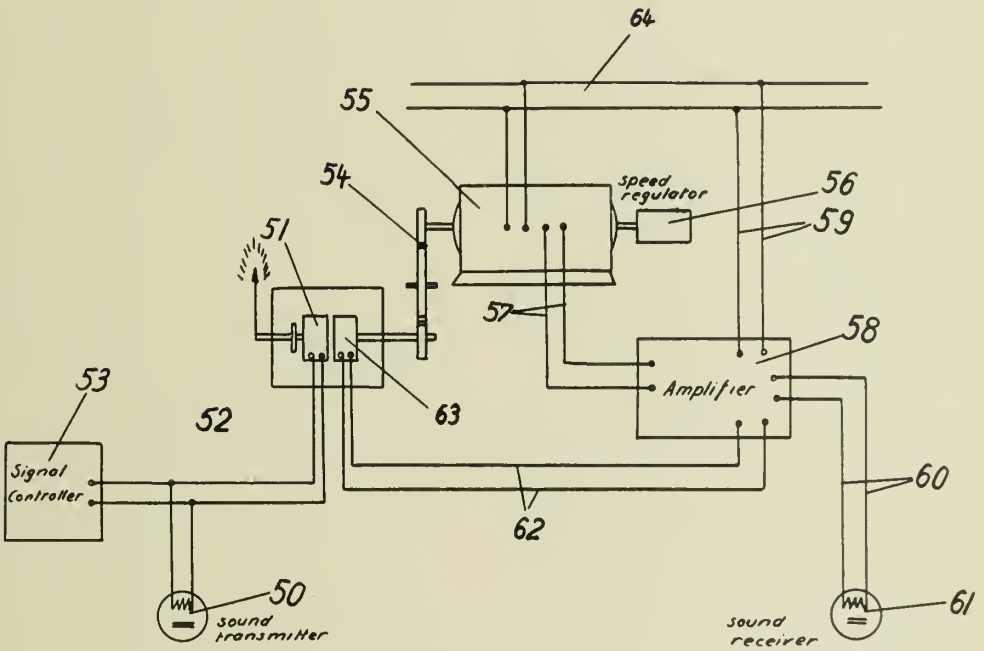


Fig. 6

Peter Orlich
Hans Hartz
Inventors
by J. Kruegler
Atty.

Published May 18, 1943 Serial No. 286,002

# ALIEN PROPERTY CUSTODIAN

## GAS MASK FILTERS AND THE LIKE

Vilém Eckhardt, Bohuslav Fiedler, and František Voves, Chotebor, Bohemia; vested in the Alien Property Custodian

Application filed July 22, 1939

This invention relates to filters for extracting from the atmosphere noxious gases, vapours, liquids or solids contained therein.

According to the present invention there is provided a universal filter insert or filling for filters which are adapted to serve as a protection against noxious gases, vapours, liquids and solid substances in the atmosphere, characterised by the fact that the effective surfaces or walls of the filter insert or filling are formed from a homogeneous filtering mass comprising a material adapted for mechanical filtration, such as paper, cellulose fibres, artificial fibres or the like and acting at the same time as carrier for substances capable of effecting absorptive and adsorptive purification of the noxious components of the atmosphere.

The term "absorptive" refers to the removal of the noxious gases by chemical methods, for example by means of chemicals or reagents capable of neutralisation, hydrolysis or other decomposition of noxious gases; such chemicals are for inst. potash, soda, thiosulphat, hexamethylentetramine, ethylendiamine and many others. The term "adsorptive" refers to the physico-chemical filtration by means of adsorbant materials, such as active charcoal, silica gel etc.

In order that the invention may be clearly understood and readily carried into practice, reference will now be made to the accompanying drawings.

Figure 1 represents a gas mask filter of an early type.

Figure 2 represents a later development of gas mask filter.

Figure 3 represents a further improved form of filter, of which

Figure 4 is an explanatory diagram.

Figure 5 illustrates by way of example a gas mask filter according to the present invention.

Figure 6 represents a section along the line *x*—*x* of Fig. 5.

Figure 7 is an explanatory diagram referring to Figs. 5 and 6.

Figure 8 illustrates another embodiment of the invention in vertical section.

Figure 9 is a section along the line II—II of Fig. 8.

Figure 10 is a section along the line I—I of Fig. 8.

Figure 11 is a section along the line III—III of Fig. 8.

Chemical, physico-chemical and mechanical filtration is used for removing from the atmosphere noxious substances that may be contained therein in gaseous form or as vapour or a cloud of solid or liquid materials.

Gas mask filters manufactured for this purpose usually consisted originally of three separate successive layers, as indicated in Figure 1, viz: a layer *a* consisting of a porous mass, e. g. diatomite, impregnated with suitable reagents for combining with and rendering innocuous chemically reactive substances such, for example, as phosgene; a layer *b* of an adsorbent mass, e. g. active carbon, whose especial function is to retain less reactive substances, such for instance as chloropicrin; and a layer c consisting of fibrous material which has been prepared either by a dry method in a free, stratified state, or else by a wet method in the form of solid bodies, the function of this layer being to retain by mechanical filtration solid and liquid substances that are distributed in the atmosphere as a mist or cloud, such for instance as diphenyl arsenious chloride.

A filter of this kind has the great disadvantage that the porous layer *a* constitutes a large ballast owing to its volume and weight, and on the other hand the strongly compressed layer of this carrier becomes caked together if stored for a length of time owing to the reagents therein and the moisture and pressure, and thus endangers the fundamental properties of the filter, since its resistant life is shortened and its resistance to inhalation increased.

Later on a substantial improvement was effected by means of the construction that is frequently used nowadays, in which the porous carrier is reduced in bulk or wholly eliminated and replaced by active carbon into which the appropriate reagents are introduced directly.

The filter made up in this way (Figure 2) thus comprises only two layers, viz. an absorptive-reactive layer *d* of impregnated active carbon and another layer *e* for mechanical filtration, which at the present time is usually made of special filter paper having suitable properties, from which filter inserts in the form of bellows are made by joining together round sheets of filter paper with a hole in the center alternately at the edge and in the middle to form a closed body. This kind of filter has the disadvantage that it is necessary on the one hand to pay careful attention to the size of the grains of active carbon and on the other hand to use a special cellulose for the arsenious insert *e* in order to keep the resistance to respiration of the filter within the limits of the demands made thereon.

According to yet another proposal that has been made it is advantageous to use moulded hollow filter bodies made of a mixture of active carbon and cellulose, that is to say a combination of the second and third filtration stages of the first construction (see above), whilst the chemical or reactive layer is unchanged, so that a two layer filter is again obtained, consisting (Figure 3) of a porous mass with reagents (layer *f*), and a hollow filter body *g* composed of a mixture of active carbon and cellulose for the adsorption and mechanical filtration.

This type of filter has found no practical application however, on account of the fact that the filtration in the part $g$ occurs in the direction of the stratification of the individual components (Figure 4;) actually the mixture of cellulose and active carbon is unevenly distributed on account of the difference in specific gravities, the upper strata $g_1$, containing more cellulose and less active carbon and the lower strata $g_2$ more active carbon and less cellulose, so that the filtration proceeds irregularly in different parts $g_1$, $g_2$.

It is an object of the present invention to remedy all the disadvantages of the previously known filters set out above and to provide a universal filter insert for all kinds of noxious substances, that is to say a filter insert having small resistance to respiration and long useful life and containing no substances that are ineffective for filtering purposes.

This is achieved according to the present invention by forming the effective walls or surfaces of the filter insert from a homogeneous filtration mass composed of a mixture of substances capable of the absorption, adsorption and mechanical filtration of noxious agents in the atmosphere.

The filter is constructed in such a way that the filtration occurs at right angles to the direction of stratification in the filtering mass, so that the air is uniformly exposed to all the constituents of the mass (Figure 3).

Such a filtering mass may be composed for example of cellulose mixed with active carbon and reagents (e. g. potash); this term "reagents" also including moisture, i. e. a certain water content in the filter mass, which has a great effect on the resistive life of the filter to various lethal gases.

Thus in accordance with the invention the fibrous substance (e. g. cellulose in form of paper, felt, artificial fibres and the like) acts as a carrier not only for active carbon but also for chemicals and/or water, thus achieving all-round effectiveness against all kinds of noxious substances.

The universal filter masses according to the invention can be produced by a wet process, in which the various constituents, e. g. fibrous substance, active carbon and solution of the reagent used, are weighed out and thoroughly mixed in a hollander. The thin paste thus formed is worked further on a sieve, being kept constantly in agitation, so as to remove the excess solution of reagent, and the mixture is precipitated on the sieve in the form of a very homogeneous slab or sheets. The reagent may be naturally added also in other forms than in a solution.

The proportions of the constituents of the filtering mass depend on the filtering properties required, and especially on the desired ration between the resistive life relative to acid substances such as phosgene, and chemically indifferent substances such as chloropicrin.

A non limitative example of the composition of the filtering mass is:

| | Per cent |
|---|---|
| Cellulosic matter (by weight) | 30 |
| Active charcoal | 50 |
| Potash | 5 |
| Moisture | 15 |

The percentage of potash or other reagents may be reduced and the content of moisture correspondingly increased. The ratio of the cellulose matter to active charcoal depends largely on the specific properties of each of these materials and has to be determined separately for each given case.

In using different proportions of moisture and/or reagents we control the ratio between the resistive life of the filter relative to phosgene and to chloropicrin, which are representatives of the main groups of noxious gases. If the ratio 1:1 is desired, we recommend for instance 17 to 19% of water in the filtering mass, and for the ratio 1:3 only 10% of water. If a longer resistive life against phosgene is required than against chloropicrin, the content of water may exceed 20%. The content of moisture may be easily varied to particular requirements in a filter which is ready for use as well as the content of chemicals.

In order to obtain universal efficiency of the filter against different noxious substances, the ratios of the individual constituents of the mixture will preferably be such that the resistive life of the filter relative to weakly reactive gases (e. g. chloropicrin) does not fall below the resistive life of the filter relative to reactive gases (e. g. phosgene).

The granulation of the active charcoal is chosen according to the type of fibrous material used. For long and thin fibres we use charcoal of very small grain size and nearly in powder form (0.01 mm.); of the cellulosic material has short and thick fibres, it is better to use a larger grain size and only a very small proportion of small grain size.

The thickness of the filter layer relative to its area depends on the type of cellulose used, the type of active carbon, the degree of granulation of the latter, and the chemicals employed. It has to be determined separately for each particular purpose, and in making this calculation one must also take into account the resistance to respiration of the filtering plates and the absolute capacity to retain the poison gas cloud (arsines).

It is then possible to make up from the filter mass obtained filter inserts which are characterised by their ability completely to purify the atmosphere although they consist merely of plates or slabs of filtering material without any separate layers of chemically active fillings with carriers (sieves and the like).

By drying the slabs thus obtained so that they only possess the desired moisture content it is possible to obtain a mass having properties suitable for making universal filters of homogeneous nature which can be suitably arranged according to the size and shape of the filter, both superficially and spatially.

Figures 5 and 6 of the drawing illustrate by way of example an embodiment of the invention in vertical section and in horizontal section on line $x$—$x$. The filter insert consists of filter layers $h$ composed of a mixture of fibrous material, active carbon or like absorbent substance, and a reagent or reagents for chemically combining with or decomposing noxious substances in the atmosphere, for instance potash and a suitable moisture content, so that mechanical filtration (e. g. of arsine and other smoky substances), and chemical (e. g. for phosgene) and adsorptive actions (for less reactive gases and vapours) take place simultaneously in these layers. These filtering walls or layers are assembled to form an insert, as indicated in Figure 5, where the walls or layers are in the form of discs with stamped-out central openings $i$, with the exception of the wall $h^1$ which closes one end of the central passage and is made without an opening. These discs are joined together alternately in the middle and at the pe-

riphery by rings $j$, $j^1$ to form a bellow-like structure, and the rigidity of the structure is ensured by supporting spacers $k$ or by other known means. The insert thus formed is placed firmly in the filter case $l$, preferably in such a manner that the filter discs $h$ are not in direct contact with the walls of the case; in the embodiment illustrated the insert is supported relative to the case $l$ by means of supports $m$ at the top and $n$ at the bottom. By removing the bottom $o$ the insert can be withdrawn from the case and replaced. The arrows indicate the path taken by the air during the filtration. The case $l$ has a pipe connection $p$ in which a respiration valve $r$ is provided with a screw-thread for the attachment of the gas mask.

Fig. 8 to 11 illustrate another embodiment of a filter according to the invention. This filter consists of a plurality of chambers which are connected alternately with the outer atmosphere and with the interior of the gas mask. These chambers are respectively those designated $s$ for vitiated air, and those designated $t$, for purified air. In Fig. 8–11, $a$ is the filter casing, $b$ a screw-threaded union, $c$ a removable bottom plate with openings for admission of the air, $d$ are layers of a filtering mass according to the invention, $e$ spacers between the filtering plates, $d$, forming chambers $t$, $f$ similar spacers forming chambers $s$, and $g$ are supports between the plates $d$ in chambers $s$ and $t$.

The filters according to the invention are not however, limited in their application to the particular constructions of a gas mask insert illustrated and described; on the contrary they may be used in varied forms for individual or collective filters. The filtering mass for use as a filter insert according to the invention need not always be made up as a closed filter body, but can be placed directly in the filter case in any desired state to act as a filling.

With the aid of filters of the types described the following advantages in particular are achieved:

(1) Improved performance for the same filter content (about 20% over the current type).

(2) Reduced resistance to respiration in view of the greater filter area (about 50% of the usual constructions).

(3) Reduced weight of filter owing to the elimination of the sieves (about 20% of the total weight of the filter).

(4) Substantial reduction in price (to about 30% of the previous manufacturing costs), since cheap domestic fibrous substances can be used.

(5) Absolute resistance to corrosion, since the filtering mass does not come into contact with filter walls.

(6) Absolute resistance to moisture, since comparatively thick filtering plates can be used.

(7) Ready interchangeability of the whole filtering mass without damaging the filter case with connection piece.

VILÉM ECKHARDT.
BOHUSLAV FIEDLER.
FRANTIŠEK VOVES.

PUBLISHED
MAY 18, 1943.
BY A. P. C.

V. ECKHARDT ET AL
GAS MASK FILTERS AND THE LIKE
Filed July 22, 1939

Serial No.
286,002
3 Sheets-Sheet 1

FIG. 1.

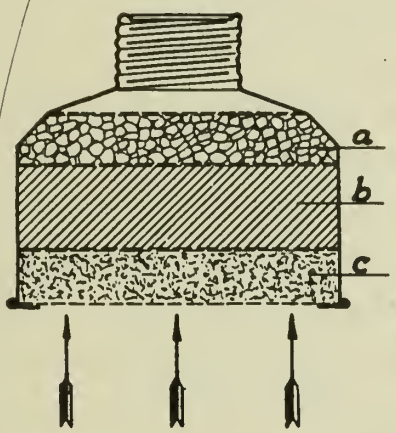


FIG. 2.

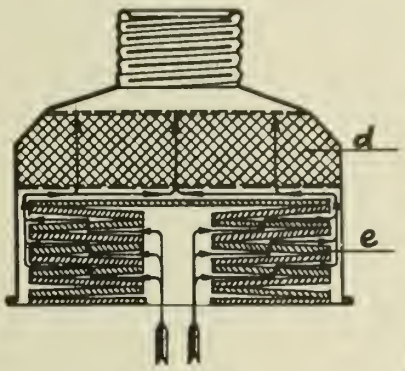


FIG. 3.

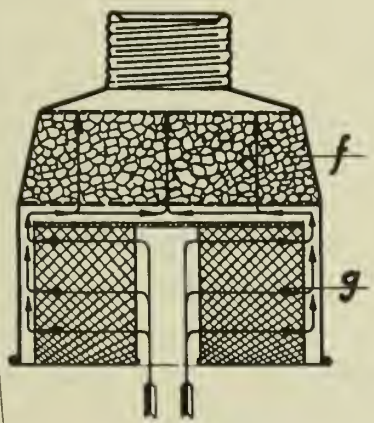


FIG. 4.

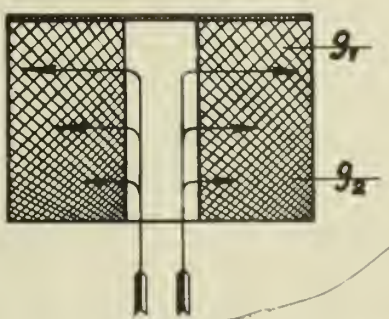


Inventors,
Vilém Eckhardt, Bohuslav Fiedler and František Voves,
by Frank A. Ackerman,
attorney.

PUBLISHED
MAY 18, 1943.
BY A. P. C.

V. ECKHARDT ET AL
GAS MASK FILTERS AND THE LIKE
Filed July 22, 1939

Serial No.
286,002
3 Sheets-Sheet 2

FIG. 5.

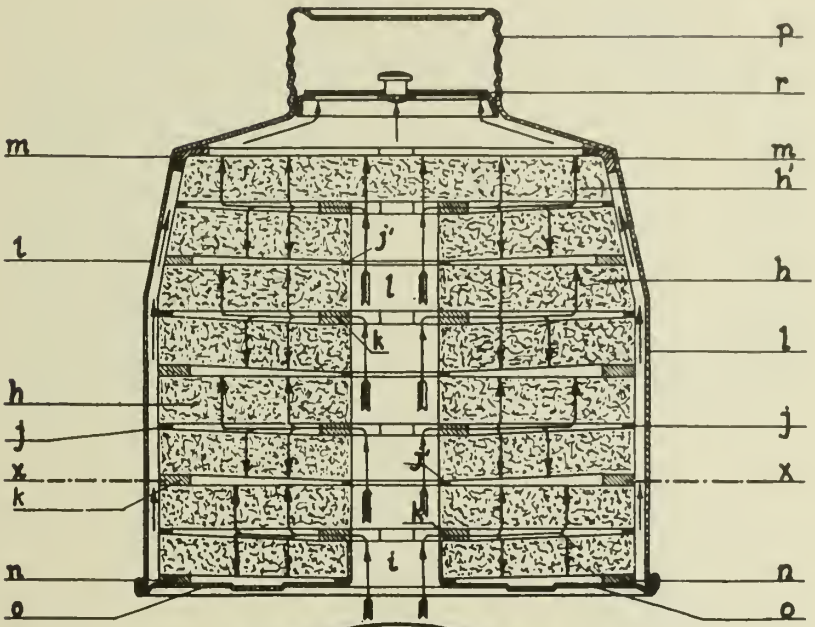


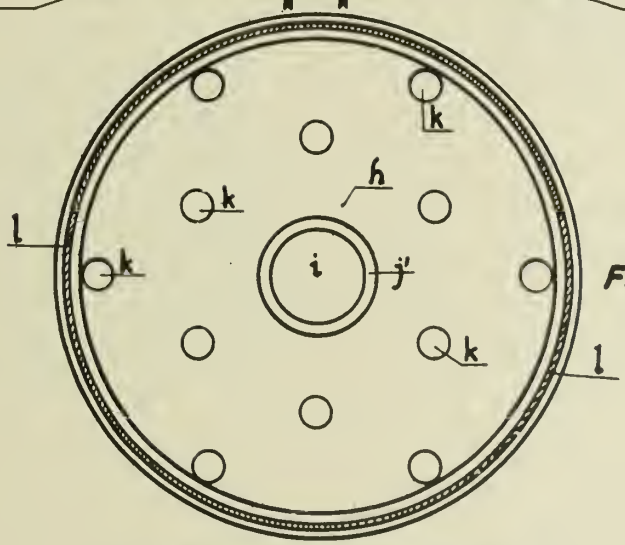


FIG. 6.

FIG. 7.

Inventors,
Vilem Eckhardt, Bohuslav Fiedler and Frantisek Vovce,
by Frank L. Adelman
attorney

PUBLISHED
MAY 18, 1943.
BY A. P. C.

V. ECKHARDT ET AL
GAS MASK FILTERS AND THE LIKE
Filed July 22, 1939

Serial No.
286,002
3 Sheets-Sheet 3

FIG. 8.

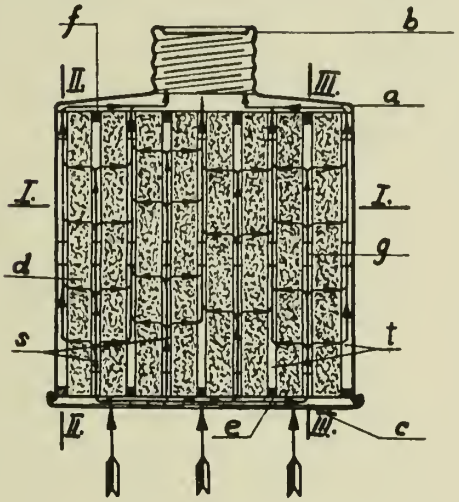


FIG. 9.

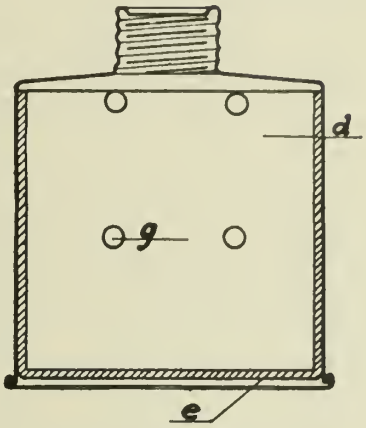


FIG. 10.

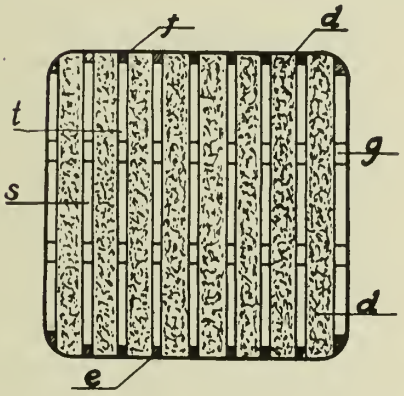


FIG. 11.

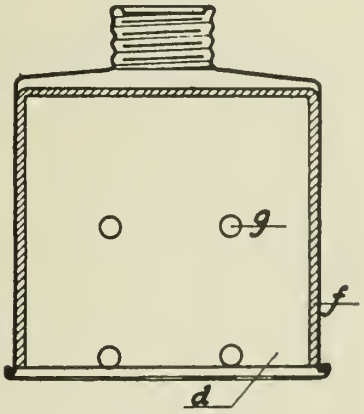


Inventors,
Vilém Eckhardt, Bohuslav Fiedler and
František Vopes,
by Frank A. Ackerman
attorney

Published May 18, 1943 Serial No. 287,174

# ALIEN PROPERTY CUSTODIAN

## ELECTRONIC AUTOMATIC REGULATOR FOR LOW-VOLTAGE ELECTRIC GENERATORS

Augusto Basili, Milano, Italy; vested in the Alien Property Custodian

Application filed July 28, 1939

In the last years electronic tube regulators for the self-regulation of electric machines have grown very much employed, and this because they allow to attain a great accuracy and rapidity of regulation.

Said regulators have been heretofore applied on electric machines capable of supplying voltages generally above hundred volts.

The present patent application relates to the application of electronic tube regulators to the instance of low voltage generators (12, 14, 24 volts and the like), said generators being largely employable in aircrafts, motor-cars, railways and the like, and is characterised in this, that it includes a direct current pilot amplifying tube and a group of electronic regulating tubes, suitably, acting upon the energising field of said generator, said field being totally or partially fed at a higher voltage than that which has to be supplied by the generator, the generator to be regulated being so realised as to be able of supplying at the low voltage required also the voltage necessary to separately feed the pre-amplifying tube and the regulating tubes controlling the field winding.

The arrangements forming the subject of the present invention are shown in the diagrams of Figs. 1, 2, 3, 4, 5, 6 and 7. In all of the above diagrams there is generally a first electronic tube (which will be called hereinafter pilot tube) which acts as a direct current amplifier to amplify the slight variations in the voltage of the generator which has to be regulated, and a group of regulating tubes (which will be called hereinafter regulating tubes) which have for their object to vary the current flow in the inductor field of the generator so as to keep the voltage constant, whatever be the causes of variations (variations of the number of revolutions, variations of load, and so on).

The fundamental points which characterize the regulation diagrams claimed in the present application are the following.

(1) Special characteristics of the machine to be regulated, which machine, being a low voltage machine, must be suitably arranged so as to supply also the voltages required for the anodic feed of the pilot tube and regulating tubes.

(2) Systems for enhancing the voltage variations of the generator which has to be regulated, so as to suitably amplify the same by the pilot tube.

(3) Special systems of insertion of the regulating tubes in relation to induction field winding of the generator which has to be regulated and devices capable of ensuring regulation even in the starting period.

Figs. 1 and 2 of the attached drawing relate to the first item, that is to the electric characteristics of the machine to be regulated and the solutions are based on the following rules:

(*a*) The pilot tube, as it must act as a direct current amplifier, requires an anodic feed apart from that of the regulating tubes, this because it is necessary, for small machines, to avoid the employ of dry batteries, generally cumbersome and heavy, which would be necessary, in the case of common feed, for the connection of the pilot tube to the regulating tubes.

(*b*) For the regulation of the induction field of the machine, which must be effected by utilising the variation of conductiveness of the regulating electronic tubes, there is required that said field be totally or partially fed by a higher voltage than that which has to be supplied by the machine. In order to suit the above conditions, in the solution of Fig. 1 there is a special type generator with a double collector armature, namely with a low voltage collector BT designed for supplying the required current, and a rather high voltage collector AT, for instance 200 to 400 volts, designed for producing energisation of the dynamo and the feed of the regulating electronic tubes; the same generator, by means of a winding A*f* suitably disposed in the pole-pieces of the inductor, generates an alternating voltage which, being suitably rectified, is utilised for the separate feed of the pre-amplifying pilot tube $V_P$.

In the solution shown by Fig. 2 the generator, of special type also, is provided, besides the low-voltage collector BT, also with two rings $A_r$ suitably connected to the collector, said rings allowing to receive alternating current, which, by means of an elevating transformer T, having two secondary windings, and suitable rectifiers, separately supplied the anode voltages required for the pilot tube $V_P$ and regulating tubes $V_R$. The machine, has also the particular feature that its induction field is generated by two different windings; a first winding Ib directly derived from the low voltage collector and a second winding Ia fed with high voltage through the control of the regulating tubes.

The high voltage field winding Ia may be wound either in accord or in opposition with respect to the low voltage field winding. In the first instance the field winding is so calculated as to allow the generator to supply the voltage required in correspondence to the highest num-

ber of revolutions, as when the number of revolutions decreases the increase of energisation required to obtain the right voltage is provided by the high voltage winding controlled by the electronic tubes. In the second case the low voltage winding is so calculated so as ensure the voltage required in correspondence to the lowest number of revolutions of the machine; when the number of revolutions increases the decrease of field energisation necessary to obtained the required voltage is obtained by differential effect of high voltage winding controlled by the regulating tubes. This second solution results generally to be less satisfactory, as it requires greater dimensions of the machine.

As to the systems adapted to enhance the voltage variations in the machine, which take place either upon variations of the number of revolutions of the machine or upon variations of load, and to amplify the same by the pilot tube, the solutions adopted are shown by Figs. 3, 4, 5*a*, 5*b*, 5c, being it understood that arrangements different from those indicated by the figures may also be adopted.

In the instance of the arrangement of Fig. 3, the voltage variations of the machine to be regulated are enhanced by comparison with a small dry battery $B_g$ inserted in the grit of the pilot tube $V_p$. The voltage of said battery is so selected as to be possible to compare the same either to the total voltage supplied by the generator or to part thereof and to this purpose Fig. 3 shows the connection of the battery arrangement to the slide $C_r$ of a distributor $P_t$ having a resistance inserted on the low voltage from the generator. From the same Fig. 3 it can be seen that the amplification by the pilot tube $V_p$ is effected by a bridge system, whereof one branch is constituted by the cathode anode section of the same tube $V_p$ and the other three branches by three resistances $R_1$ $R_2$ $R_3$ of suitable values. Said bridge is fed, in the diagonal ending at the two points 1, 2, by the high voltage source provided in the diagrams of Fig. 2 and 1 for the pre-amplifying tube; the other diagonal of the bridge, ending at the points C and D, contains the grit-cathode interval of the regulating tubes $V_r$. From the examination of Fig. 3 it is easily understood that slight variations taking place in the voltage supplied by the generator are transferred to the grit-cathode interval of the pilot tube $V_p$, and that such variations are considerably amplified between the points C, D of the bridge so as to determine corresponding variations of the conductiveness of the regulating tubes $V_r$.

In the arrangement of Fig. 4 the voltage variations which take place in the generator are enhanced by means of a special bridge device $Bl_1$, $Bl_2$, $Bl_3$, $Bl_4$, comprising in two opposite branches ballast regulating resistances $Bl_1$ and $Bl_3$ and in the two other branches resistances whereof the temperature coefficient is nul. Said bridge is fed in the diagonal *mn* by the generator collector $B_t$ and is so regulated that in correspondence to the normal voltage value of the generator, the difference of potential between the points A and B of the other diagonal should take the desired value, for instance zero or a certain predetermined value. It is then clearly seen that small variations of the generator voltage with respect to the normal voltage is integrally transferred between the points AB of the bridge and between grit and cathode of the pilot tube $V_p$, so that said variations are considerably amplified between points C and D of the second bridge $R_1$ $R_2$ $R_3$ $V_p$ including the pilot tube $V_p$.

In the arrangement of Fig. 5*a* the voltage variations from the generator act on the pilot tube $V_p$ and, therefore, on the regulating tubes $V_p$ intermittently by means of a vibrator system S. For a correct understanding of the operation of said arrangement, it will be assumed that in correspondence to the minimum voltage which has to be supplied by the generator, the current flowing in the coil S of the vibrator is not sufficient to detach the contacts $C_1$ and $C_2$ of the same vibrator. In such conditions grit and cathode of the pilot tube $V_p$ will be at the same potential and the equilibrium of the bridge $R_1$ $R_2$ $R_3$ $V_p$ will be so regulated that betwen the points C, D of the bridge the difference of potential be capable of bringing the conductiveness of the regulating tubes $V_r$ to the value required for the maximum possible current to flow in the field winding of the machine. Bt it now supposed that the generator voltage increases; the contacts $c_1$ and $c_2$ will detach, and consequently the grit of the pilot tube $V_p$ will be negative with respect to the cathode thereof; a new value of potential differential will be then determined between the points C and D of the bridge, said value determining a variation of the conductiveness of the tubes $V_r$, so as to cause a decrease of the current flow in the field winding of the generator and, therefore, a voltage decrease of the generator, said decrease causing the contacts $c_1$ and $c_2$ to detach.

It follows that the contacts $c_1$ and $c_2$, permanently attached in correspondence to the minimum voltage value required from the generator, will periodically detach by certain intervals of time, the greater the increase of voltage determined in the generator, the greater being said intervals of time.

Fig. 5*b* differs from Fig. 5*a* simply by the fact that the operation of the contacts is inverted, that is said contacts will remain detached when the voltage is low and will be attached periodically by intervals of time which are longer when the increase of voltage in the generator is greater.

It is to be noted that the above operation of the vibrator regulation has great advantages over the systems wherein the vibrator controls the induction field of the machine directly; this because in the case of Figs. 5*a* and 5*b* the current passing through the contacts $c_1$ and $c_2$, by suitably proportioning the distributors $Pt_1$ and $Pt_2$, can be rendered as slight as desired, for instance as a fraction of milliampère. It is also to be noted that by the arrangements of Figs. 5*a* and 5*b* the pre-amplifying pilot tube $V_p$ can be even dispensed with, by directly connecting the points *p* and *q* to the cathodes and grits of the regulating tubes $V_r$, this because the voltage variations obtainable from the operation of the vibrator can reach very high values, slightly less than the voltage supplied by the generator itself; besides the voltage variations may be rendered greater by the insertion of a small dry battery $B_g$ as indicated by Fig. 5c.

As to the third point, that is the system of insertion of the regulating tubes with respect to the field winding of the generator, the solutions indicated by Figs. 6 and 7 may be adopted.

In the case of the solution of Fig. 6 the regulating tubes $V_r$ are shunted on the high voltage field winding of the generator and are fed by the high voltage source which may be either the

high voltage collector of the generator itself in the case of the machine designed in the solution of Fig. 1 as indicated by Fig. 6, or the rectifier fed by the rings of the generator designed as in the case of Fig. 2. The operation of the regulating tubes is easily understood; when the voltage supplied by the generator is the lowest required, the grits of the regulating tubes $V_r$ are at a potential much negative with respect to the cathodes and consequently said tubes $V_r$ result in having an almost nul conductiveness. In such conditions it can be assumed that the high voltage external circuit of the generator consists only of the resistance $R_c$ in series with the field winding $I_a$ through which the maximum current will flow.

When, however, the generator voltage increases, the grits of the regulating tubes $V_r$, upon the action of the pilot tube $V_p$ become less negative with respect to the cathodes, and consequently said tubes will assume a certain conductiveness, and the greater the voltage increase of the generator, the greater will be said conductiveness. In such case, therefore, the resistance formed by the interval anode-cathode of the regulating tubes $V_r$ will be shunted on the field winding, the greater the voltage increase of the generator, the lower being the value of said resistance. In such instance the external circuit of the high voltage source will afford, therefore, a lower resistance and will give rise to an increase of the current flow, whereupon the fall of potential on the resistance $R_c$ will increase and the voltage at the field winding terminals will decrease. By way of example, let us consider the case that the field winding resistance be 2000 ohm, the resistance $R_c$ be 1000 ohm and the high voltage source give a 300 volts potential.

Then in the case that the conductiveness of the tubes $V_r$, upon the action of the tube $V_p$, should be nul, the field winding will be fed with 200 volts with a current of 100 milliampère; in the case instead when the regulating tubes $V_r$, owing to the increased potential from the generator assume a certain conductiveness e. g. such a conductiveness that the whole of the tubes should afford a resistance of 2000 ohm, in that case the external resistance will be no more 1000+2000=3000 ohm as before, but will be lessened and will result 1000+2000/2 ohm=2000 ohm. Consequently, assuming the feeding potential to be practically constant, the circulating current flow will result 150 milliampères and therefore, on the resistance $R_c$ there will be no more a 100 volts, but a 150 volts potential drop; at the field winding terminals there will be then a potential of 150 volts and, therefore, the circulating current flow will drop from 100 milliampères to 75 milliampères.

In the arrangement according to Fig. 6, the resistance $R_c$ may be advantageously by a regulating ballast resistance so designed as to let pass, as the maximum current the field current value which is necessary to obtain the required potential in correspondence of the lowest number of revolutions of the machine. Considering the operation of the self-regulating resistances, the advantage obtainable with respect to the employ of common resistances can be easily understood.

The arrangement according to Fig. 6 shows also an important feature, as it includes also a supplementary regulation system with a vibrator S which directly controls the field resistance $R_t$, said system being adjusted for a potential slightly above the maximum voltage required from the generator.

The object of said supplementary vibrator regulator is to ensure the operation of the generator both at starting for the period of time required, to get the electronic tubes heated, specially in the case where the latter are of the indirect heating type, and to ensure the operation of the machine when some element of the electronic tube regulating circuit should result to be inefficient.

In the arrangement according to Fig. 7, the regulating tubes $V_r$, instead of being shunted on the energising winding of the generator, are connected in series with said windings; in order to permit the operation of the device in the starting period of the machine, when the electronic tubes $V_r$, their filaments being cold, afford an infinitely great resistance, a branch $rs$ is shunted on the regulating tubes $V_r$, said branch including in series two contacts $C_1$ and $C_2$ actuated by the coil S and a resistance $R_v$ combined with a vibrator $S_2$.

The operation of the system is the following. When the potential of the generator is nul or very low, the contacts $C_1$ and $C_2$ and the contacts $C_3$ and $C_4$ are close upon the action of the return spring, the field winding $I_a$, therefore, being short-circuited; as the potential increases, until it keeps somewhat below the minimum normal value required from the machine, the contacts $C_1$ and $C_2$ remain closed and the contacts $C_3$ and $C_4$ are closed or open according to the potential value, and the vibrator $S_a$ is so regulated as to ensure a practically constant potential at a value slightly below the minimum potential required from the machine. When the potential reaches the minimum normal value the contacts $C_1$ and $C_2$ open and then the electronic regulating system starts operation, under the control of the tubes $V_r$ and $V_p$ which have already had the opportunity of getting hot.

In the case of Fig. 7 the supplementary vibrator $S_a$, as stated above must be adjusted at a potential e. g. by 10%, below the minimum potential required by the generator.

Fig. 6, by way of example only, shows a complete diagram of the regulating device when employing a machine having the characteristics of Fig. 1, an actuating device for the pilot tube according to Fig. 3 and a parallel insertion arrangement of the regulating tubes.

AUGUSTO BASILI.

PUBLISHED
MAY 18, 1943.
BY A. P. C.

A. BASILI
ELECTRONIC AUTOMATIC REGULATOR FOR LOW-VOLTAGE ELECTRIC GENERATORS
Filed July 28, 1939

Serial No.
287,174
5 Sheets-Sheet 1

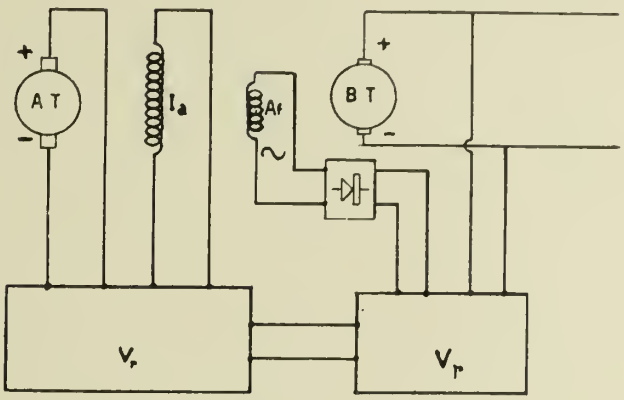


fig. 1

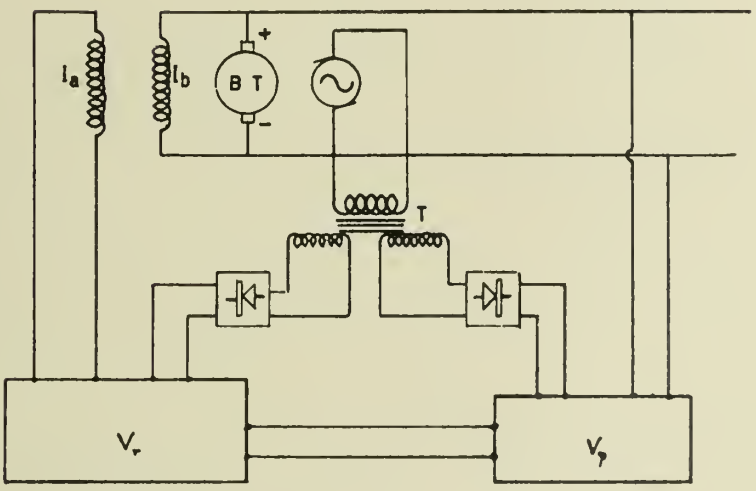


fig. 2

INVENTOR
AUGUSTO BASILI
By
Young, Emery & Thompson
ATTYS

PUBLISHED

MAY 18, 1943.

BY A. P. C.

A. BASILI

ELECTRONIC AUTOMATIC REGULATOR FOR LOW-VOLTAGE ELECTRIC GENERATORS

Filed July 28, 1939

Serial No. 287,174

5 Sheets-Sheet 2

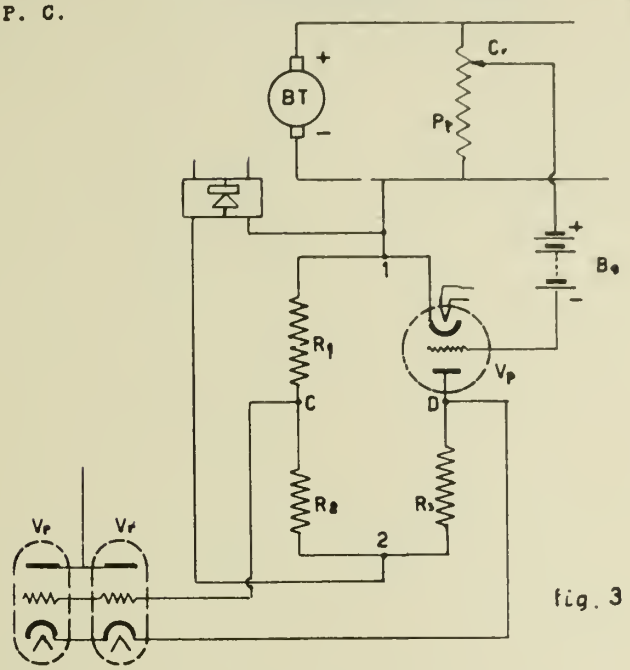


fig. 3

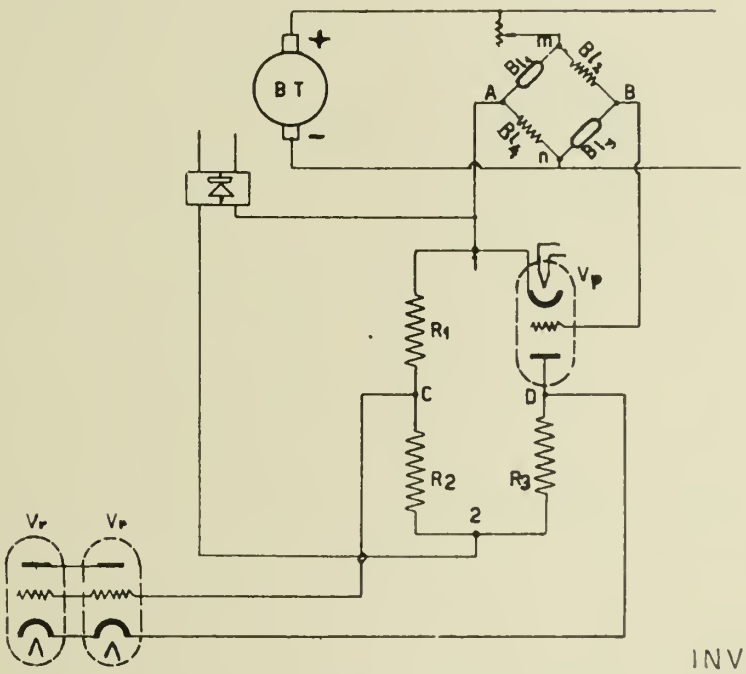


fig. 4

INVENTOR

AUGUSTO BASILI

BY

Young, Emery & Thompson

ATTYS.

PUBLISHED
MAY 18, 1943.
BY A. P. C.

A. BASILI
ELECTRONIC AUTOMATIC REGULATOR FOR LOW-VOLTAGE ELECTRIC GENERATORS
Filed July 28, 1939

Serial No.
287,174
5 Sheets-Sheet 3

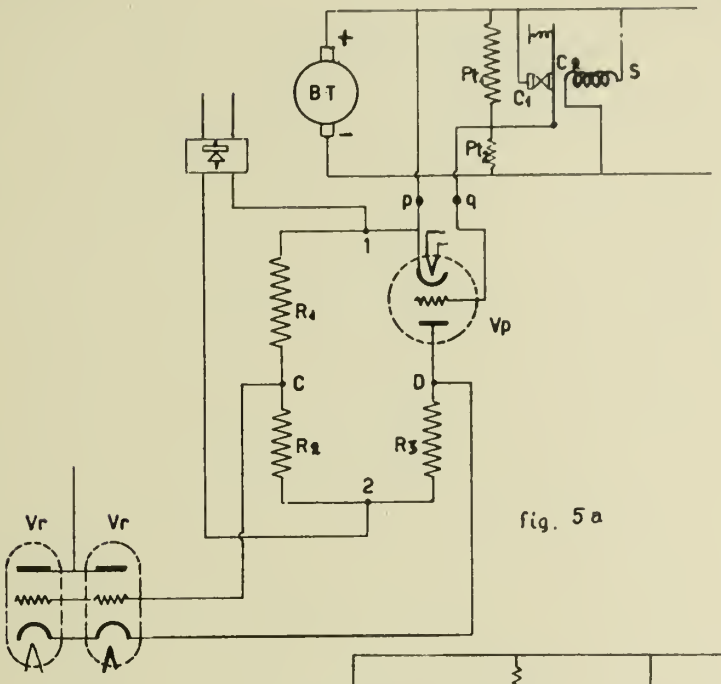


fig. 5a

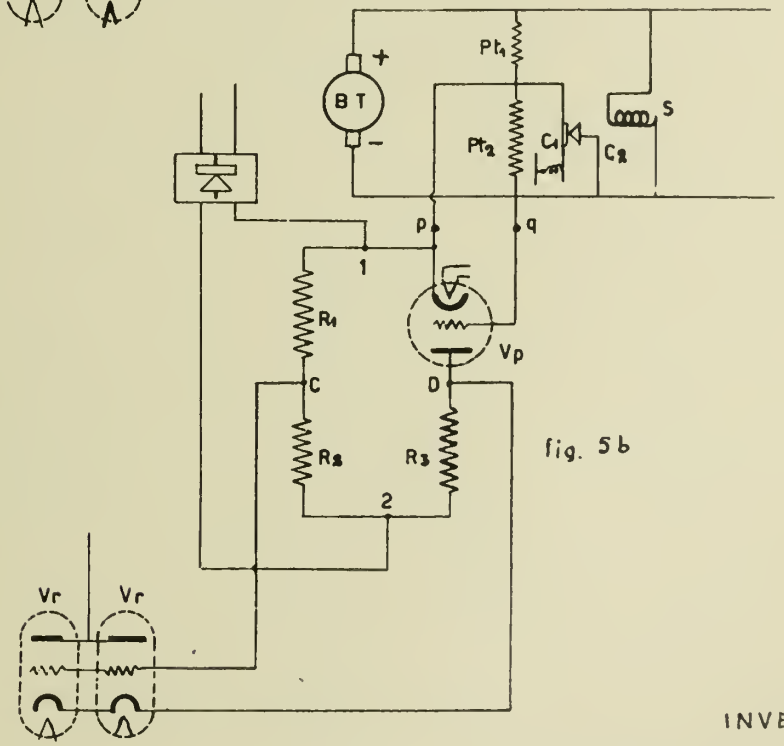


fig. 5b

INVENTOR
AUGUSTO BASILI
By
Young, Emery & Thompson
ATTYS

PUBLISHED
MAY 18, 1943.
BY A. P. C.

A. BASILI
ELECTRONIC AUTOMATIC REGULATOR FOR LOW-VOLTAGE ELECTRIC GENERATORS
Filed July 28, 1939

Serial No.
287,174
5 Sheets-Sheet 4

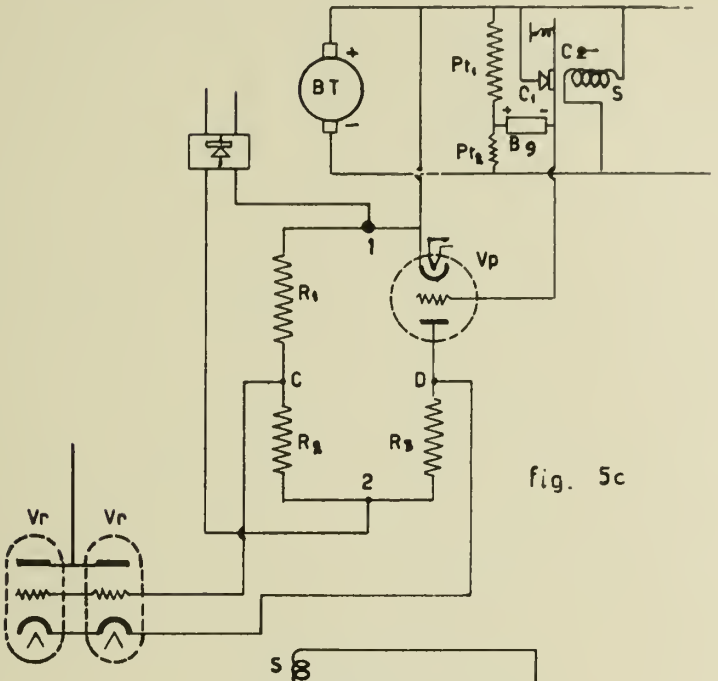


fig. 5c

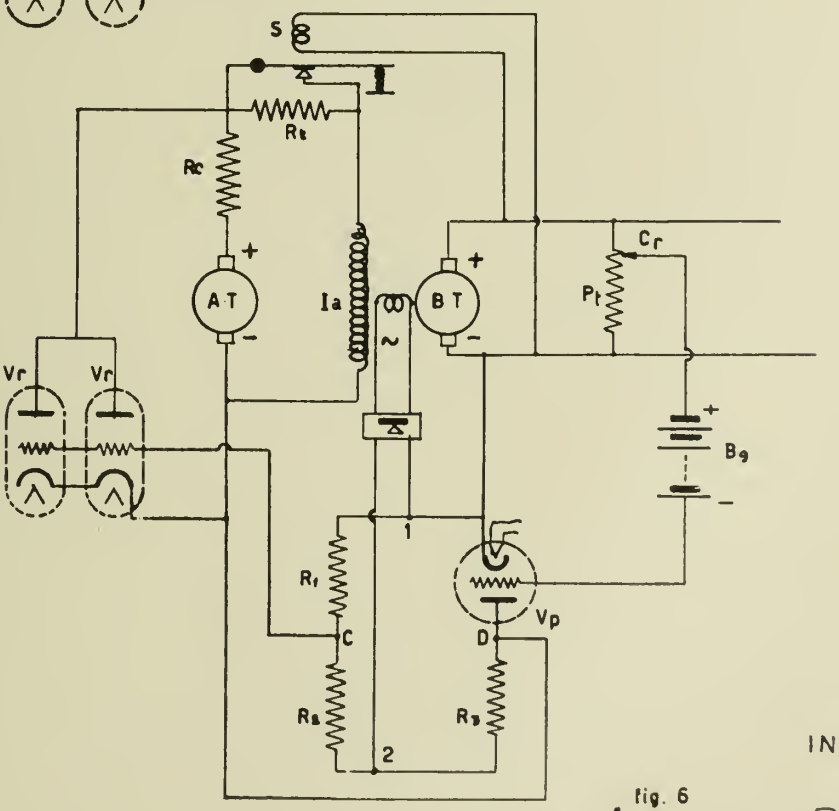


fig. 6

INVENTOR
AUGUSTO BASILI
By
Young, Emery & Thompson
ATTYS.

PUBLISHED
MAY 18, 1943.
BY A. P. C.

A. BASILI

ELECTRONIC AUTOMATIC REGULATOR FOR LOW-VOLTAGE ELECTRIC GENERATORS

Filed July 28, 1939

Serial No.
287,174

5 Sheets-Sheet 5

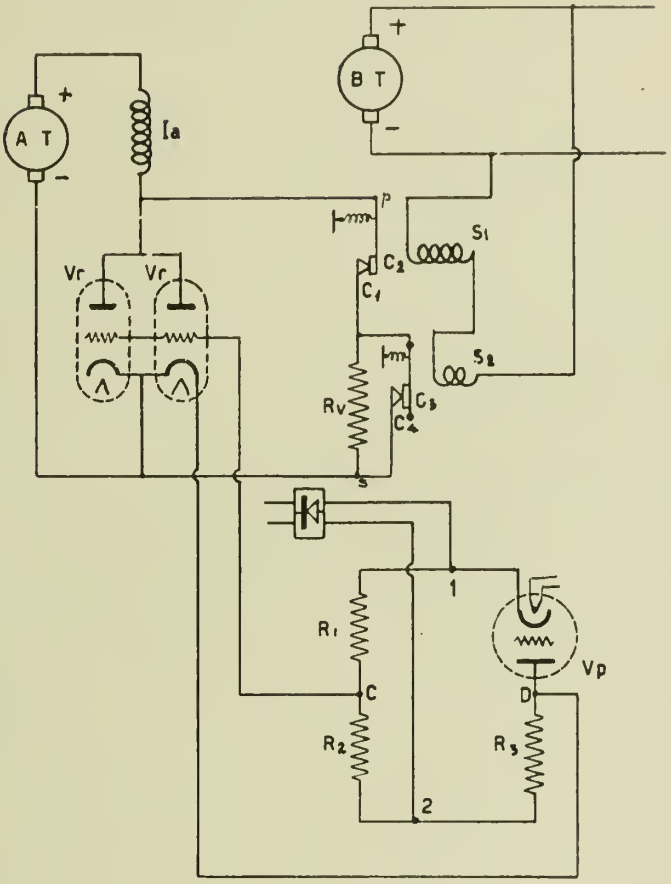


fig. 7

INVENTOR
AUGUSTO BASILI
By
Young, Emery & Thompson
ATTYS

Published May 18, 1943 Serial No. 287,416

# ALIEN PROPERTY CUSTODIAN

## WARNING SYSTEM AND APPARATUS FOR USE WITH AUTOMOBILES, MOTOR CYCLES AND SIMILAR MOTOR VEHICLES

Bote Schreuder, Arkel, Holland; vested in the Alien Property Custodian

Application filed July 29, 1939

My invention relates to a warning system, more particularly for automobiles, which will enable the driver to give during the hours that silence is prescribed a visual warning.

It is an object of the invention to provide a warning system in which this visual warning is given by the same operation as that by which an audible signal may be provided.

Another object of the invention is to provide a system by which visual warnings of different kind may be given.

A further object of the invention is to provide such a system comprising an actuating device e. g. a press button by which one current circuit may be opened and a second current circuit be closed thereby providing a very simple warning system.

Still a further object is to combine such a warning system with a device for giving audible signals thereby providing a simple system by means of which either audible or visual signals may be given.

Still further objects of the invention will appear from the folowing description and the accompanying drawing.

It is known that automobiles and similar vehicles have generally a horn for giving audible warning signals. This horn is usually actuated by means of a press-button on the steering wheel, on the steering bar or in another place within direct reach of the driver.

Optical signals may also be given, which of course can only be used in darkness. These optical warning signals are produced by repeatedly switching over the current from lamps having high intensity to lamps having low intensity or vice versa, for instance from one or both of the head lights, spotlights or other search lights to the dimmed condition of the head lights, to the side lights etc. This switching-over is usually carried out by means of one or more switches on the dashboard, the steering wheel or (especially in motor-cars for dimming the lights) on the floor-board next to the clutching pedal.

The emission of audible warning signals in darkness is practically superfluous and their use may even be prohibited for certain hours of the evening and night. The driver however is so much accustomed to the production of horn signals by means of their press-button that his hand automatically reaches for the press-button and the forbidden signal is often given before the driver is aware of his mistake. Nevertheless this will often result in a fine for the driver.

An object of the invention is to completely eliminate this risk.

Some preferred examples of the invention are described below with reference to the drawing, which illustrates some executional examples of a circuit and a device according to the invention.

Figure 1 is a circuit arrangement of a car installation embodying the invention.

Figure 2 is another circuit arrangement according to the invention.

Figure 3 is a vertical cross-section of a press-button switch for use in conjunction with the invention.

Figure 4 is a top view of the press-button switch of Figure 3.

Figure 5 is a horizontal section through this switch taken along the line V—V in Figure 3.

Figure 6 shows another embodiment of the invention.

Figure 7 shows another modification of the device according to the invention.

In Figure 1 of the drawing is shown an electric horn **1**, which is fed by an accumulator **2** by means of a press-button **3**, e. g. on the steering wheel, and via a selector switch **4** in series therewith, the latter being in the position shown. The press-button **3** which on impression moves in the direction of the arrow, is provided with a rest contact and an operating contact, whereas the selector switch **4** has two switch-arms and may assume three different positions. At **5** are shown lamps of high intensity, e. g. the head lights, and at **6** lamps of smaller intensity. The different electrical connections appear clearly from the drawing. In the indicated position of the selector switch **4** impression of the press-button **3** enables only the emission of audible signals. In the middle position of the switch, when the press-button is in the high position the small lamps **6** are burning and upon impression of the button **3** the big lights **5** are switched on instead of the small ones. By repeatedly actuating the push-button **3**, the driver of the motor-vehicle can give warning signals without sounding the electric horn **1**. In the third position of the selector switch **4** the head lamps **5** are alight when the press-button **3** is in the high position and upon impression of the button **3** the small lamps **6** are lit instead of the head lights. In this way too the driver is able to give optical warning signals.

In Figure 2 the same reference numbers indicate corresponding parts of the installation in which is incorporated an automatic periodically working switch-over device **7** which alternately

can close one of two circuits. In the second as well as in the third position of the selector switch 4 this device is put into action by pressing down the button 3, and this device lights alternately and in a predetermined rhythm the lamps 5 and the lamps 6. The driver is no longer obliged to depress the button and release it each time, but as long as he keeps the button down the device 7 provides the signaling. Upon release of the button 3 the big lights will burn when the selector switch is in the middle position or the small lights when it is in the third position.

In both circuit arrangements therefore the selector switch 4 serves also for changing over from big to small lights, e. g. upon reaching the built-up area of a village or town.

The circuit may further be completed with tail-lights, indicating arrows, stop lamps, parking lights, etc.

The selector switch 4 may be mounted in any convenient place, e. g. on the dash-board, or near the press-button of the steering wheel, in which latter case it may be combined with the press-button. This case is illustrated in Figures 3 and 5 in which 8 is the push-button, mounted on a stem 9, which slidably passes through a base 12, the stem being locked by means of a washer and screw 11. A spring 9 keeps the press-button in the upper position. The base 12 is provided with an upstanding rim 13, carrying contact rings 14 and 15, which are separated by a ring 16 of insulating material and which form respectively the rest contact and the operating contact of the press-button switch. Inside these rings there is a contact disk 17, slidably mounted on pins 18 which are rigidly connected to the base by means of a screw threaded portion and nuts as shown in Figure 3. On each pin there is a spring 19 between the base 12 and the contact disk 17 which keeps the contact disk in contact with the upper contact ring 14. The press-button 8 carries a downwardly extending rim 20 which upon depression of the button touches the disk 17 and brings this disk into electrical contact with the ring 15, against the action of the springs 19.

In Figures 3–5 the selector switch is mounted on the same base 12 as the press-button 8 and consists essentially of a ring 21 of insulating material provided with two more or less resilient contact strips 22 and 23 located at diametrically opposite points of the ring.

The ring 21 encircles the base 12 and in the circumferential surface of the base there are embedded two groups of contact strips, the upper group consisting of six strips 24—29, each one of which is diametrically opposite another strip of this group. The lower group consists of two contact strips 30 and 31 only, which each extends over such a portion of the circumference of the base 12 that they each pass under three contact strips of the first mentioned group. All these contact strips are so arranged that a resilient contact strip on the ring 21 can interconnect one contact strip of the upper group with the underlying contact strip of the lower group. The ring 21 is mounted between a circular bracket 34 and a clamping ring 36, the latter being removably fixed to the base by means of screws 37. Furthermore the ring 21 is provided with an extension 35 so that it can be rotated by hand and brought into each one of the three positions X—X, Y—Y and Z—Z suitable rests being provided to fix the positions of the ring in a more or less definite way e. g. by snap-action. So in each position of the ring two diametrically opposite contact strips of the upper group are connected with the two contact strips of the lower group. The electrical connections are such that each of the rings 14 and 15 is connected to the contact strips 30 and 31 respectively of the lower group. The live connection of the battery is brought to the pins 18 and the six contact strips 24—29 of the upper group are in the same order connected to: nothing, the small lights, the big lights, the horn, the big lights, the small lights. In the position Y—Y as shown in Figures 3 and 5 the current flows from the battery via pins 18 and contact disk 17 to contact ring 14 (upper position of the button) and from this ring to the lower contact strip 30 and hence through the contact strip 22 to the contact strip 25 of the upper group which is connected with the small lights. Upon depression of the button the current goes from the contact disk 17 through the ring 15 to the lower contact strip 31 and hence through the contact strip 23 to the contact strip 28 which is connected with the big lamps. Therefore by depression of the button the intensity of the cars lighting is varied and by this means a warning signal is given. The functioning of the device in the other positions X—X and Z—Z will be readily understood from the above description with reference to the drawing.

In Figure 6 it is shown how the press-button switch according to the invention may be mounted to eliminate the need for electric wires running through the steering column. This is an advantage because wires running through the steering column are continuously being twisted so that the insulation may easily break down. In the embodiment shown 38 is the stationary sleeve of the steering column, 39 the steering spindle or shaft carrying the wheel 40. In the centre of the wheel is mounted a spring-loaded knob 41 which may be depressed by hand. Below the steering wheel this knob has suitable extensions 42 which pass through vertical slits in the wall of the hollow steering spindle and these extensions 42 serve to actuate a contact disk similar to that of Figure 3 and contacting in the same manner with contact rings 14 and 15. The push-button switch itself is arranged below the wheel on the non-rotatable sleeve of the steering column, so that the electrical connections may run along the sleeve without need for twisting. Apart from the knob 41 the construction of the push-button switch may be similar in every respect to that of Figure 3.

Figure 7 shows another executional example of a push-button switch. In this figure the switch itself is located at the lower end of the steering column and the contact disk 43 which is suitably held against-rotation, is actuated by means of a long rod 44, passing through the middle of the steering shaft and carrying a knob 45 at its upper end. This knob may also be spring loaded and the rod 44 is able to turn together with the steering shaft because it passes with play through the contact disk 43. In order to actuate the disk the rod 44 carries locking nuts which hold the disk 43 against axial displacement. The disk 43 is insulated in a suitable way from the rod 44 and can alternately connect the contacts 46 and 47 or, upon depression of the knob, the contacts 48 and 49. The contacts 46 and 48 are strapped together, the function of this device being the same as that of the switch 3 in Figure 1. In this case the selector switch is mounted separately e. g. on the dashboard. The operating rod 44 may

be replaced by suitable other means, c. g. a so called Bowden cable as is well known in the art.

It will be understood that in conjunction with the invention any other suitable switch construction may be used and that the location of the push-button switch as well as of the selector switch may be chosen at will. Also they may be combined or not, or be combined with a third switch without departing from the scope of this invention. It will also be understood that when the switch is mounted on the steering wheel any other convenient method of eliminating the drawback of wire twisting may be used, e. g. contact rings with brushes may be mounted somewhere on the steering column.

BOTE SCHREUDER.

PUBLISHED
MAY 18, 1943.
BY A. P. C.

B. SCHREUDER

WARNING SYSTEM AND APPARATUS FOR USE WITH AUTOMOBILES, MOTOR CYCLES AND SIMILAR MOTOR VEHICLES

Filed July 29, 1939

Serial No.
287,416

3 Sheets-Sheet 1

FIG.1

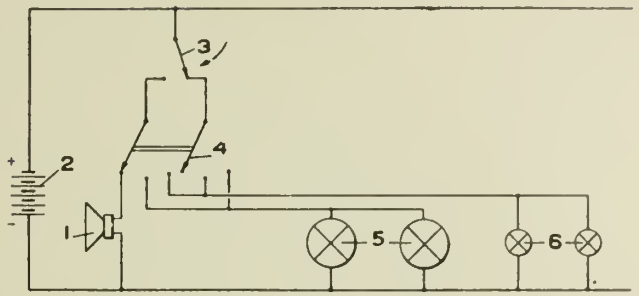


FIG.2

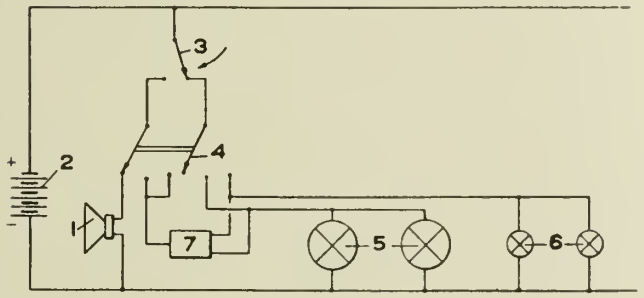


FIG.5

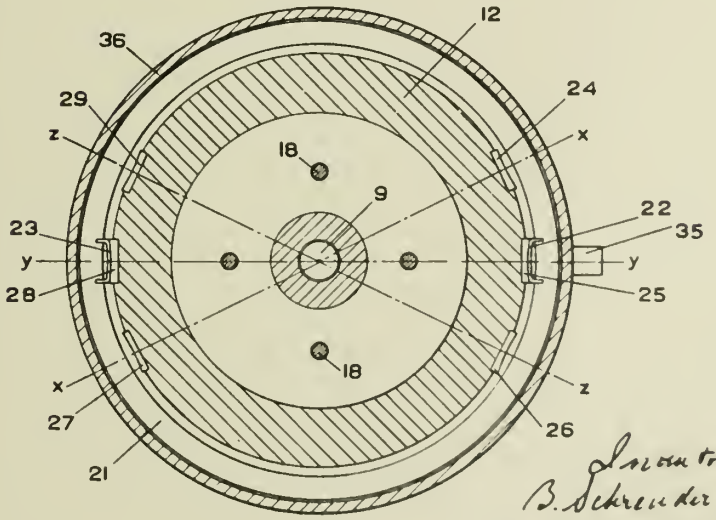


Inventor:
B. Schreuder
By K. F. Wenderoth
Atty

PUBLISHED
MAY 18, 1943.
BY A. P. C.

B. SCHREUDER

WARNING SYSTEM AND APPARATUS FOR USE WITH AUTOMOBILES, MOTOR CYCLES AND SIMILAR MOTOR VEHICLES

Filed July 29, 1939

Serial No.
287,416

3 Sheets-Sheet 2

FIG. 3

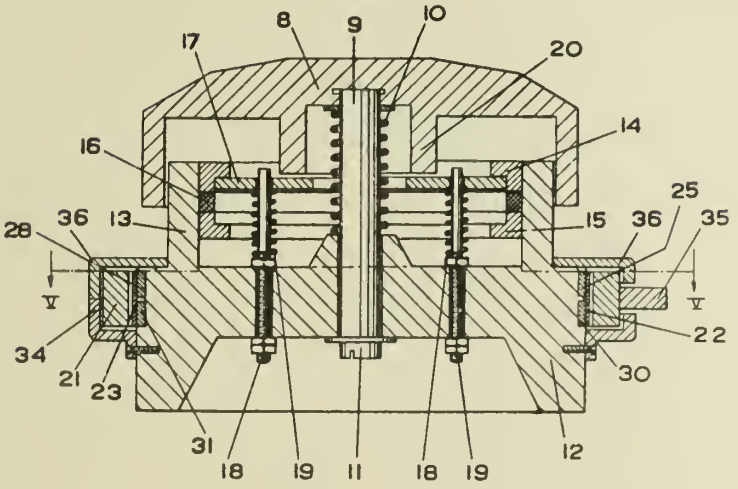


FIG. 4

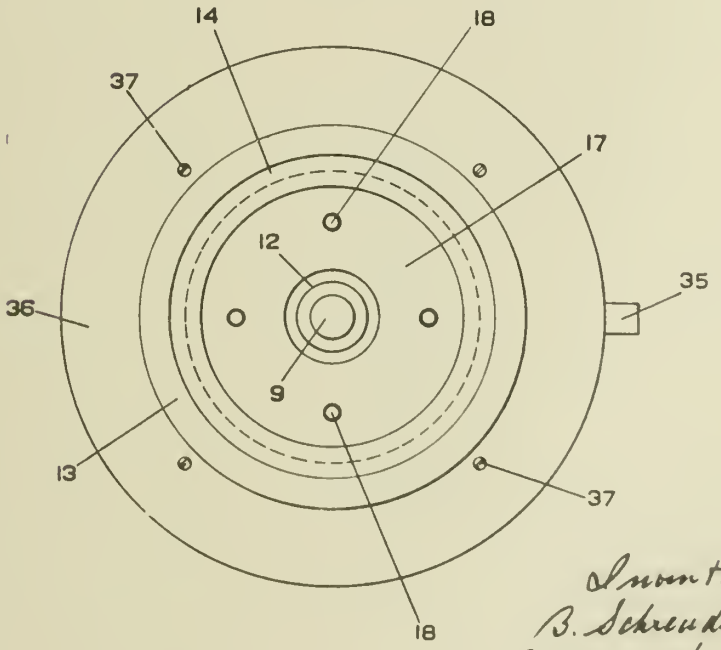


Inventor:
B. Schreuder
By E. F. Wendroth
Atty

PUBLISHED
MAY 18, 1943.
BY A. P. C.

B. SCHREUDER

WARNING SYSTEM AND APPARATUS FOR USE WITH AUTOMOBILES, MOTOR CYCLES AND SIMILAR MOTOR VEHICLES

Filed July 29, 1939

Serial No.
287,416

3 Sheets-Sheet 3

FIG.6

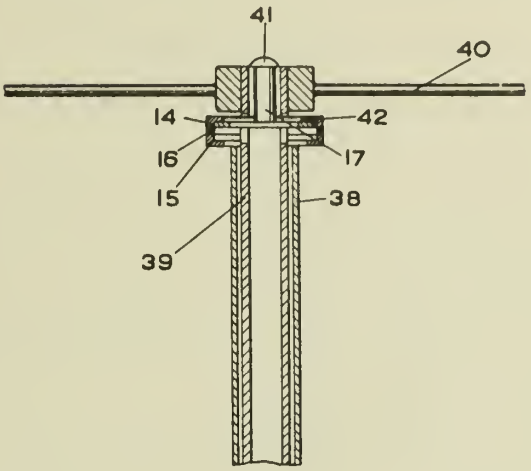


FIG.7

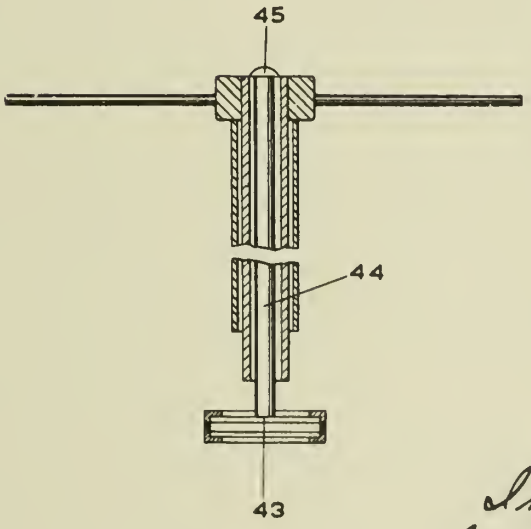


Inventor:
B. Schreuder
By E. F. Wendroth
Atty

Published May 18, 1943 Serial No. 288,035

# ALIEN PROPERTY CUSTODIAN

## PROCESS FOR CARRYING OUT ELECTROLYSES

Hans Rudolph, Frankfurt A. M., Germany; vested in the Alien Property Custodian

No Drawing. Application filed August 2, 1939

This invention relates to a process for carrying out electrolyses of the most varied kind with aqueous electrolytes with employment of porous diaphragms.

According to the invention diaphragms are employed which consist essentially of a polymeric artificial resin or a mixture of polymeric artificial resins and have been treated with a wetting agent or wetting agents.

The diaphragms may for example consist of polyacrylic acid compounds, for example polyacrylic acid esters, polymethacrylic acid compounds, for example polymethacrylic acid esters, polyvinyl compounds or mixtures thereof or of interpolymers. The polymers may contain the usual additional substances such as softeners and the like. As examples of polymers of the above mentioned kind there may be mentioned: polymethacrylic acid methyl ester (Plexigum), polyvinyl carbazole (Luvikan), polystyrene (Trotitul), polyvinyl halide (Igelit). By suitable choice of the artificial resin or the composition of the artificial resin mixture desired properties can be imparted to the diaphragms as regards strength, hardness, elasticity, resistance to chemical attacks, temperature resistance etc.

The diaphragms can be produced in very simple manner in that particles of artificial resin of suitable order of size, for example grains of the same order of size, are brought into moulds, the artificial resin particles caused to cohere together therein at their points of contact and, after sufficient solidification has taken place, the structures are removed from the moulds. Cohesion can for example be brought about in that the thermoplastic artificial resin particles are superficially softened by supplying heat thereto or in that they are rendered capable of cohesion by treatment with solvents or swelling agents or in that organic binders suitable for uniting them, for example solutions of polymeric artificial resins, are employed. The particles which have been rendered capable of cohesion are united with one another in the mould by a slight pressing pressure, the pressure being so proportioned as not to cause an undesired constriction or stopping up of the pores. Artificial resin particles can advantageously be employed for building up the diaphragms, which per se are porous or microporous.

Since the polymeric artificial resins are more or less water-repellent, it was not to be expected that diaphragms consisting of such artificial resins could usefully be employed technically. In fact so far as I am aware such diaphragms have never been employed technically, although the excellent properties of polymeric artificial resins, especially their extraordinary resistance to chemical actions of the most varied kind, have been known for a number of years.

It has now been established by extensive experiments that artificial resin diaphragms of the kind described can be employed with excellent results if they are subjected to a treatment or pre-treatment with wetting agents. Comparative experiments have shown inter alia that it is possible when working with artificial resin diaphragms with wetting agents to reduce the electrical resistance by about 200–300%, thus coming within the range of electrical resistance of the previously usual diaphragms and making possible the utilisation of the special properties and advantages of artificial resins for electrolysis.

As wetting agents there may be employed the commercially usual products, for example such as are employed in the textile industry. There may be mentioned as examples sulphonates, such as are obtained by treatment of high molecular aliphatic alcohols with sulphonating agents. The wetting agents which are known under the trade names 'Neckal', 'Igepon' and 'Humectol' have among others proved well suited. The wetting agent or mixture of wetting agents which is most suitable in any particular case can readily be determined by simple preliminary experiments. The treatment of the diaphragms with the wetting agents can be effected by steeping, painting or spraying, if desired repeated painting or spraying. The wetting agents can also be employed in the form of solutions. This is advisable in particular for the treatment of fine-pored diaphragms.

The invention offers the advantage of being able to employ diaphragms which possess an extraordinary resistance to chemical attacks, for example to the attacks of alkalis, acids, halogens, for example chlorine, etc. Moreover there is the advantage that the diaphragms can be produced readily and in a very short time in any desired shape, for example also in the shape of curved plates, in cylindrical shape or the like, and in one piece, that the structures first produced can readily be altered to another shape because of the thermoplastic properties of the material, and that they can readily be inserted and removed. Further advantages are the production and utilisation of diaphragms of small wall thickness and low weight. The surprisingly favourable effect of the wetting agents, and especially the fact that

permanent effects can well be obtained by treating the diaphragms with wetting agents, was not to be foreseen.

The following experiments were carried out for determining the permeability to liquid of porous plates produced from an artificial resin by the process according to the invention. The experiments were all carried out both before and after treatment with a wetting agent in an electrolytic cell filled in one case with 20% sulphuric acid and in the other case with 20% common salt solution, by measuring the resistance between two bright platinum sheets each of 30 x 40 mms. inserted in the cell as electrodes with a current density of about 7.1 amps/dm² per electrode. The cell was so arranged that the resistance between the electrodes could be determined alternately and without interposition of a diaphragm plate of the material to be investigated.

The determination of the resistance was carried out at room temperature with a distance between the eelctrodes in each case of 40 mms., by measurement of the strength of the current passing through and the terminal potential difference between the electrodes, and calculation of the resistance given by the observed values, whilst the current density was permanently maintained as far as possible constant by two rheostats. Porous plates of 4 mms. thickness were investigated, which were produced from the artificial resin known under the trade name "Plexigum" (methacrylic acid methyl ester), by causing particles of this resin to cohere at their points of contact and then subjecting them to treatment with a wetting agent.

The wetting agent employed was a 1% solution of "Humectol" in which the plates were immersed for a short time prior to use.

The following results were obtained:

| No. | Electrolyte | Diaphragm | Treated with wetting agent | Amp. | Volt. | Ohm. |
|---|---|---|---|---|---|---|
| 1 | 20% $H_2SO_4$ | No diaphragm | | 1.50 | 2.63 | 1.76 |
| 2 | do | Diaphragm | 0 | 1.75 | 7.80 | 4.46 |
| 3 | do | do | Yes | 1.75 | 4.95 | 2.83 |
| 4 | 20% NaCl | do | 0 | 1.60 | 18.00 | 11.25 |
| 5 | do | do | Yes | 1.69 | 4.90 | 2.90 |

From the above table it can be seen that by treatment of the artificial resin plates with the wetting agent the resistance in 20% sulphuric acid is reduced by 1.63 ohm and that the resistance of the artificial resin plates in sulphuric acid was only 1.07 ohm greater, after treatment with the wetting agent, than the liquid resistance between the electrodes without interposition of a diaphragm. In the 20% common salt solution the reduction in resistance produced by treatment with the wetting agent amounted to 8.53 ohm.

HANS RUDOLPH.

Published May 18, 1943 Serial No. 288,518

# ALIEN PROPERTY CUSTODIAN

## ARRANGEMENT FOR CLOSING UP TUBULAR CONDENSERS

Heinrich Ike, Berlin, Germany; vested in the Alien Property Custodian

Application filed August 5, 1939

The novelty relates to an arrangement for the closing-up of tubular condensers and to the current lead-ins for such a condenser employed more particularly for high frequency and high tension.

It is known to arrange condensers and more especially so-called wound condensers in tubes formed of insulating material, more especially tubes of ceramic material so as to obtain favorable mechanical and electric values. Care is to be taken hereby that in the first place a favorable insulation resistance is obtained, as well as a favorable temperature curve. In the hitherto known mode of constructions, the ceramic tube in which the wound condenser is situated is closed up by means of a metal cap placed upon the said tube and whose borders reach over the tube. In this way, the exterior insulation path on the tube is shortened and on account of the danger of contact of the conducting closing cap with other structural parts, short circuits and flash-overs could easily occur.

The novel arrangement overcomes the aforementioned disadvantages in that the ceramic tube, or tube of other insulation material, is extended on both sides beyond the actual length of the condenser and the free ends of the tube are covered with silver. The caps through which the leads are inserted are then pressed into these ends at the manufacture and are soldered onto the silvered borders of the protective tube. In such a construction of the condenser, the possibility that the condenser layers may come in contact with structural parts is eliminated since all conducting parts connected with the condenser layers are situated inside the ceramic tube. Furthermore, in the novel arrangement, the entire outside of the ceramic tube serves as insulation path while hitherto a part of the ceramic tube was covered by the conducting closing caps.

An example of construction is shown in the accompanying drawing, in which item "1" represents the ceramic tube whose inner border is provided with the silver coating **2** necessary for the soldering. The end of the tube has fitted thereinto the cap **3** which at the soldering border **6** is joined with the connection **4** extended into the inside of the condenser **7**. The cap **3** is connected with the silver coating **2** of the ceramic tube by means of the soldering border **5**.

The advantage of the described novel arrangement resides in the protection against tension and touching and in a completely smooth outside having no corona borders. This eliminates completely any scratching noises in high-frequency arrangements. In the arrangement embodying the novel idea the flexible covers and protective tubes of insulating material hitherto employed to avoid said noises need no longer be used.

HEINRICH IKE.

PUBLISHED

MAY 18, 1943.

BY A. P. C.

H. IKE
ARRANGEMENT FOR CLOSING
UP TUBULAR CONDENSERS
Filed Aug. 5, 1939

Serial No.
288,518

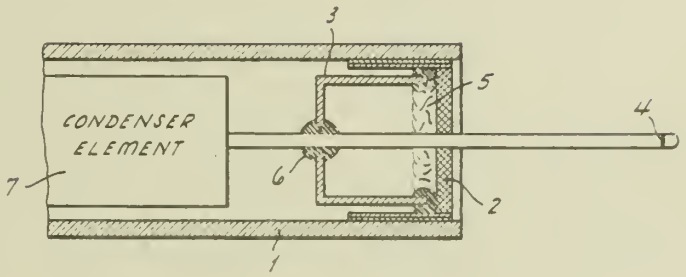


INVENTOR
HEINRICH IKE

BY H. S. Snover

ATTORNEY

Published May 18, 1943 Serial No. 289,710

# ALIEN PROPERTY CUSTODIAN

## PROCESS FOR SEPARATING THE COMPONENTS OF A MIXING, HAVING VERY NEAR BOILING POINTS

Giulio Natta, Milano, Italy; vested in the Alien Property Custodian

Application filed August 11, 1939

The methods of distillation and rectification allow the easy separation of the components of a liquid mixing, provided there exists a certain difference between the boiling points of the individual components. Sometimes however cases occur some of which are of remarkable practical interest, wherein the difference between the boiling points is so small that the separation by fractional distillation is very difficult, expensive or even practically impossible to be carried out in industrial apparatus. In such cases one has to recourse to other physical processes e. g. the fractional freezing, or the use of solvents in order to obtain the separation or the diminution in the concentration of one or more of the components.

In some cases, though seldom, also the physical properties of the two components which are to be separated, are nearly all very similar with one another and there follows, consequently, a remarkable practical difficulty in order to effect the separation. Examples of the aforesaid kind are given, for instance, by mixings of paraffins and olefines having the same number of carbon atoms, or by mixings of olefines with diolefines having the same number of carbon atoms. Similarities between the physical properties in the above mentioned cases increase with the increase in the number of carbon atoms and while for instance the separation of ethane from ethylene by rectification is still possible, said separation results more difficult between propane and propylene, butane and butylene, and still more between butylenes and butadienes. In fact between butadiene and alpha butylene have practically the same boiling point, i. e. —5° C.

It has been proposed in some cases, to effect the separation by means of solvents e. g. the dissolution in furfurol or in other solvents for obtaining the separation of butadiene from alpha butylene. By this method however, as butylene is also soluble in said solvents, it is not possible to obtain a complete separation but merely an enrichment in butadiene in the dissolved portion of the gas and a corresponding impoverishment in the undissolved portion. Only by repeating the operation of dissolution and extraction it could be possible to obtain a small highly concentrated portion of one of the mixing components.

The process herein proposed allows one to obtain the complete separation of the two mixing components by means of a single operation, carried out in a continuous way, which yields, even in a continuous way, the two components in the pure state or at least highly concentrated.

The present invention consists in the use of a column filled with Raschig rings, or formed by certain number or plates; in this latter case the column is built up like the usual rectification column.

The mixing of gases or vapours to be separated is introduced in said column at an height which varies according to the composition of the mixing, while at the top of the column is introduced, also in a continuous way if so desired, a solvent in which one of the components of the mixing is more soluble than the other.

The solvent descending in the column gradually becomes richer with one of the components and, when at the bottom of the column, is heated in order to evolve the gases therein dissolved. A portion of said gases, which may even be in a volume substantially greater than the quantity introduced in the column during the same time, ascends in the column in counter current and gradually becomes richer in the other less soluble component.

The above disclosed process is differentiated from the known rectification processes by the fact that the liquid phase is formed by a solution in a comparatively slightly volatile solvent, and further that while in the rectification columns the reflux, required in order to obtain a good working of the column itself, is obtained by condensing vapours and enters at the top of the column, in the present case, the reflux is formed by gases obtained by degasification of the solvent and enters at the bottom of the column.

For instance when a column filled with Raschig rings is used and a mixing containing 30% of butadiene and 70% of butylene, is introduced therein at ⅔ of its height whilst at the top there is introduced cold aniline in the proportion of one litre for every 15+30 litres of gases, and subsequently, the aniline is degasified by heating at a temperature slightly lower than that of the boiling point and 30% is extracted from the volume of the gas after cooling at the bottom and 70% at the top of the column, it will be observed that the two gases so obtained, respectively consist of butadiene and butilene, the purer the higher is the height of the column and greater the ratio between the volume of solvent and the volume of the gaseous mixing to be treated.

By the use of columns several metres high, it is possible to obtain a practically complete separation.

For the separation of butylene from butadiene other liquids instead of aniline, may be used as a solvent e. g. benzene or better its derivatives which are less volatile, or fufurol, pyridine and generally aromatic or hydroaromatic substances preferably containing a couple of conjugated double bonds, or other substances in which butadiene is more soluble than butylene.

The use of slightly volatile solvents, even if they dissolve the components of the mixing less easily than other volatile solvents, offers the advantages of reducing the losses of solvent, as a consequence of the fact that the gases issuing at the bottom and the top of the column are saturated with the solvent at the temperature at which they are cooled. By using, e. g. in the case of separation of butylene, butadiene, aniline as a solvent and strongly cooling the separated gases, the losses of solvent are practically negligible.

In order to improve the thermal balance of the process, the solvent, which is collected at the bottom of the column and is to be gasified by the hot solvent issuing from the degasifying chamber, may be pre-heated. Said chamber may be a part of the column itself being located at its base or may be kept separate from it.

One of the ways of carrying out the process object of this invention is schematically illustrated in the annexed drawing, and consists in the use of a column (A) filled with Raschig rings (B, B).

Into said column there is introduced, e. g. through the passage C, with a continuous flow, the mixing of gases or vapours to be separated; the passage C being located at an height which varies according to the composition of the mixing, while at the top of the column there is introduced, also continuously, a solvent in which one of the two components is more soluble than the other. The solvent descending the column gradually enriches itself with said more soluble component and when at the bottom E it is heated in F, e. g. by a steam heated coil O in order to evolve the dissolved gases. A portion of said gases, which may even be in a volume remarkably greater than the quantity introduced in the column during the same time, is led again in G and ascends therein in counterflow with the solvent, gradually becoming richer, towards the top, with the less soluble component. Of the two components the less soluble collects at the top and is drawn out in I through the regulator R, while the more soluble component is drawn out through F by means of the regulating valve S and is cooled in P in order to eliminate the solvent vapours. The degasified solvent is cooled in L and through the tank M and the pump N comes back into cycle entering at the top of the column, eventually after further strong cooling in the refrigerator Q.

The apparatus and procedure disclosed are merely by way of example and other processes may be included within the same general principle. E. g. the column may be formed by a certain number of plates like the usual rectification column. Or the degasifying device may be included in the column itself.

The process disclosed may be used not only for separating butylene from butadiene, but also for extracting them from complex gaseous mixing in which they are contained in small amounts e. g. from residual gases resulting as by-products in the butadiene manufacture. In a similar case both butylene and butadiene are extracted from the less soluble gases accompanying them (ethylene, hydrogen, carbon dioxide, nitrogen etc.) by absorption in a solvent in a washing column which may be filled with Raschig rings.

The solution thus obtained may be degasified and the gases obtained by subjected to a fractional absorption in a second column in order to obtain pure butadiene at the bottom of this latter while at the top butylene, eventually in the impure state owing to small quantities of less soluble components, is obtained. The process may be simplified by introducing in the middle of the fractionating column, instead of the gases extracted from the solvent, the solution itself, extracting thereafter the degasified and cooled solvent at the bottom of the fractionating column while only a small portion is led again at the top of the column and the remaining portion is led to the absorption column.

The above very simple process for the separation of gases or vapours by fractional absorption and reflux of the more soluble component is useful in several applications and in many cases it may advantageously replace certain more expensive chemical processes of separation and purification.

In order to reduce the dimension of the fractionating columns and the required amount of solvent it may be advantageous to operate the apparatus at a pressure higher than the atmospheric pressure, e. g. up to 10 atmospheres.

GIULIO NATTA.

PUBLISHED
MAY 18, 1943.
BY A. P. C.

G. NATTA
PROCESS FOR SEPARATING THE COMPONENTS OF A MIXING, HAVING VERY NEAR BOILING POINTS
Filed Aug. 11, 1939

Serial No.
289,710

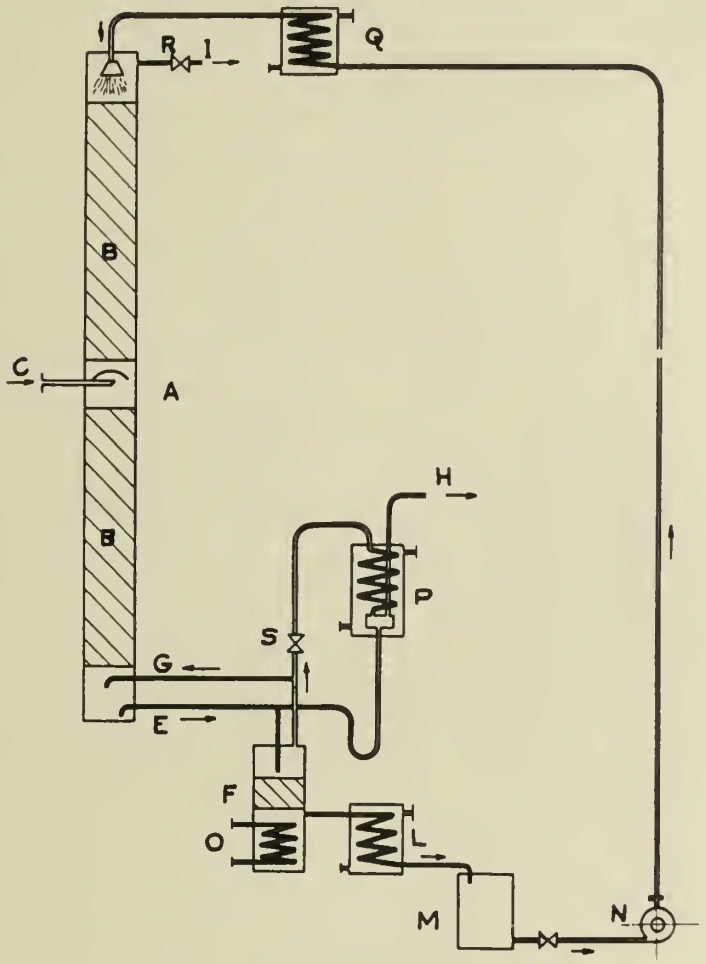


Inventor
GIULIO NATTA.

By Mcdowell & Pearson

Attorney

Published May 18, 1943 Serial No. 290,306

# ALIEN PROPERTY CUSTODIAN

## ELECTROMAGNETIC OSCILLATING DEVICE WITH FREELY OSCILLATING ARMATURE

Carl Ernst Eichhorn, Steinach in Thuringen, Germany; vested in the Alien Property Custodian

Application filed August 15, 1939

The object of the present invention is an electromagnetic oscillating devise for loudspeakers (for instance Radio-Loudspeaker) and sound-pick-ups and microphones, fitted with a magnetic pair of poles, the poles of which are directed towards each other and separated by an air space and with a freely oscillating armature that is situated parallel to the middle face between the two magnetic poles. The free top end of the armature is turned towards the said air-space.

The particular peculiarities of the usual electromagnetic oscillating device for Radio Loudspeakers of the above mentioned kind are the following: An iron armature that is, in relation to the width of the air space—with its top face only very little overlapping the magnetic poles—is highly sensitive, possesses however a very small amplitude range, which means the practically useable amplitude of the vibration. Is such an armature to carry out stronger vibrations, it would at once exceed its working scope unfavorably and its vibrations would not any more correspond with the electrical vibrations inducing these vibrations.

Further, an armature that is in relation to the width of the air space considerably overlapping the magnetic poles with its top face, though possessing a greater amplitude range, is on the other hand only little sensitive, since that part of the magnetic flow between the poles of the magnetic pair of poles which passes through the armature, is becoming great and already effects a saturation of that armature zone which is situated opposite the air space, thus preventing the magnetic flow in the freely-oscillating-armature that is induced by the electric vibrations.

With the hitherto used electromagnetic oscillating device it was therefore difficult, to achieve at the same time strong vibrations combined with a normally wide amplitude range.

Developments showed that the trade tried to abolish the foregoing disadvantages of these electromagnetic oscillating device. It has for instance been attempted to achieve a greater amplitude range by placing the iron armature an the air space in oblique position to each other (compare for instance British Patent Report 383879). If such a oscillating device is being used as a loudspeaker, the armature carries out an unfavorable turning-movement. The German Patent 630,970 tries to prevent the turning movement in this manner, that the armature crosses axial-symmetrically to the air space. But in these cases too, that part of the flow between the poles of the pair of magnetic poles which passes through the armature, is practically great and causes the disadvantages stated.

If any such oscillating device used as pick-ups and microphones, an unfavorable degree of effect is being obtained.

The present invention tries to prevent the disadvantages stated of a magnetic oscillating device of the type mentioned, in the following manner, when the freely oscillating armature is subdivided like a comb into iron bars of any desired thickness lying close to one another in side-by-side relation. Each of these iron bars is aligned at one end and secured to a brass blade spring. At their other ends, i. e. at their driving face ends, the bars are partly bent or stepped to both sides of a common plane, so that the driving faces of the iron bars exhibit a zigzag or wave-shaped outline (see for example the zigzag outline of Fig. 8). The drive faces (front faces) of the iron bars, in proportion to the width of a straight running air space, are about the same width as the latter. They themselves are not, or but slightly overlapped, but the zigzag or wave shaped outline of the said drive face of the armature forms overlapping zones. The iron bars can however be arranged in a straight line and the magnetic air space itself arranged to have a zigzag or wave form (as shown in Fig. 7 of the accompanying drawings).

The subdivision of iron armatures to form a comblike structure is known but in the present invention, however, it is utilised for the first time for freely oscillating armatures for loudspeakers, pick-ups and microphones with the difference that the iron bars when arranged in zigzag or wave form, the magnetic air space itself is arranged in a straight line (see for example the zigzag outline of Fig. 8) or when arranged the iron bars in a straight line, the magnetic air space itself is arranged to have a zigzag or wave form (see for example Fig. 7) and that the non-magnetic insertions between the iron bars are for pick-ups and microphones of about 0,15 to 0,30 mm. The stronger non-magnetic insulations is necessary, if the oscillating device is to be used as a pick-up or microphone, so that the iron bars will carry the magnetism of the magnetic pole-sockets above which the vibrate, advantageously and effectually through the bobbin, which is being considerably assisted inasmuch as the iron bars themselves with their front face in proportion to the width of the air space of the magnetic pole are not, or only slightly overlapped, as thus the magnetic flux of the drive magnet is only

carried slightly through the front face of the iron bars.

If, instead of placing the drive face of the armature to the air space oblique 4 times (compare for instance Fig. 8) the drive face of the armature to the air space were only placed oblique once, then the non-magnetic insulation between the iron bars could be a little weaker.

The magnetism of the magnet-pole-sockets is carried by magnetic influence to the little armature bars respectively swinging above them and magnetizes them. As the little iron bars are not of the same width as the air space, they cannot carry from pole-socket to pole-socket the magnetism that has been obtained by the magnetic influence of the pole-sockets. They are in their vibrations, alternately more or less magnetized by an S or N magnetism of the pole-sockets and consequently produce a strong current in the bobbin.

When used for loudspeaker operation, the magnetic insulation of the iron bars is of no consequence, as they are short circuited again above the drive side, so that the whole armature thus receives essentially the quality of a massive armature (see for example Fig. 9). When however used for pick-up or microphone then the sheet iron ring is omitted.

In the invention, patent of which is applied for, a solid armature may also be used. In this case it would be thus, that the overlapping zones of the drive face of the armature in relation to the air space of the magnetic poles alternately, are only insignificant. A further considerable progress is effected inasmuch as in the air space of the magnetic poles, the zones on the drive-face of the armature are multiplied. For this purpose, the drive-face of the armature runs zigzag- or wave shaped to a straight going air space, it possesses many angles or arches (compare for instance Figs. 2 and 3). A similar effect on the contrary is gained thus, that the air-space is zigzag- or wave shaped, while the drive face of the armature retains its usual rectangular shape (compare for instance Figs. 4, 5 and 6). By the insignificantly small overlapping zones and the numerous oblique positions of the drive-face of the armature and the air space to each other, a great many homogeneous sections are formed within the amplitude range on the drive face of the armature, which are of paramount importance for the great sensitiveness and splendid clearness of sound.

With all the described types of the magnetic oscillating device stated, the armature on the considerably enlarged amplitude range is not any further subject to braking effects, which might be caused by the spring of the armature an by the magnetic force of repulsion of the drive-magnet. The effect of a non-overlapping iron armature with the usual magnetic oscillating devices viz. to jump out of the air space and to place itself above one of the magnetic poles, can be so adjusted, that with the object of the present invention, this effect may counteract the elasticity of the spring and removes same within the amplitude range. The armature glides freely to and fro on its amplitude range, out of which it could only with difficulty be pressed, as at this moment the force of the armature-spring would come into effect again.

The drawing represents the invention in various examples of types.

Fig. 1 shows a side view of a magnetic oscillating device with a permanent magnet and a free-vibration-armature with partly zigzag- or wave shaped armature-side.

Fig. 2 shows drive face of the armature and part view of pole sockets with straight running air-space.

Fig. 3 shows perspective view of armature of the Figs. 1 and 2.

Fig. 4 shows top view on a pair of magnetic poles with air shaped running air space and an armature in sideway position with rectangular drive-face.

Fig. 5 shows a zigzag-shaped air space with rectangular armature in resting position.

Fig. 6 shows a perspective view of pole sockets of the Fig. 5.

Fig. 7 shows a cross cut through an armature that is subdivided into little iron bars which are arranged in straight line and the air space of which is wave-shaped.

Fig. 8 shows the drive face of an armature that is subdivided into little iron bars, the free ends of which are arranged zigzag- or wave shaped opposite to a straight running air space.

Fig. 9 is a plan view of a group of iron bars provided with a sheet iron ring near their drive faces, i. e. immediately adjacent the driving face of the armature.

In the arrangement shown in Figs. 1 to 3, the armature **1** has flat oblique surfaces **2** on the driving face end and is secured by means of screws or rivets **3** to an elastic blade spring **4** which is supported in a bearing block **5**. Arranged round this oscillating device is a permanent driving or field magnet **6** with two pole-sockets **7** and **8** which leave an air space **9** between them and which are cut off obliquely on the outer side in such manner that the narrowest part of the air space lies immediately adjacent the driving face end of the armature **1**. Near the driving face end of the armature is secured a wire **10** for the purpose of transmitting the vibrations of the armature to the loudspeaker diaphragm **11**.

With the types according to Figs. 4, 5 and 6, the armature is formed in cross-cut as a flat rectangular, while the pole sockets are formed in profile on the faces that are turned towards each other.

With the types according to Figs. 7, 8 and 9, the armature is subdivided into a great number of iron bars situated parallel aside each other, which are, according to the type as per Fig. 8, intercrossed with their free ends in such a way, that the iron bars as a whole form a zigzag or wave-shaped boundary line of the drive face of the armature, while the air-space runs in a straight line.

With the type according to Fig. 7, the iron bars are placed in a straight line and the air space runs in zigzag- or wave-shaped manner. In Fig. 9, the iron bars are short-circuited immediately above the drive face by means of a sheet-iron ring **10**.

CARL ERNST EICHHORN.

PUBLISHED
MAY 18, 1943.
BY A. P. C.

C. E. EICHHORN
ELECTROMAGNETIC OSCILLATING DEVICE WITH FREELY OSCILLATING ARMATURE
Filed Aug. 15, 1939

Serial No.
290,306

Fig. 1

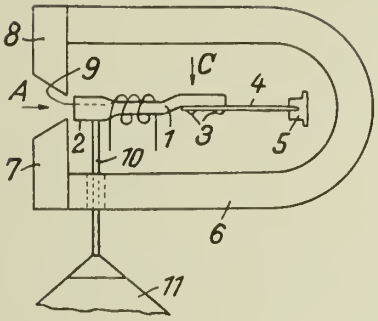


Fig. 2

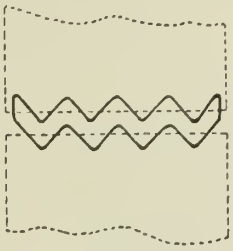

Fig. 3

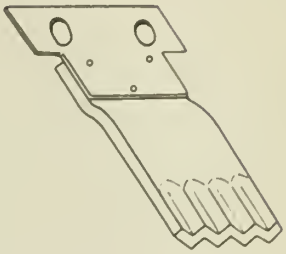

Fig. 4

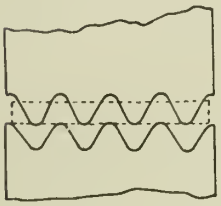

Fig. 5

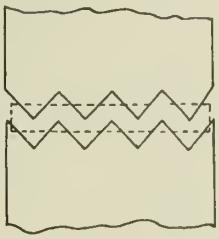

Fig. 6

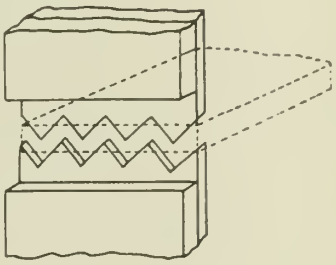

Fig. 7

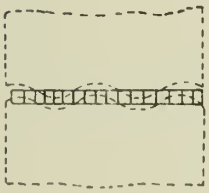

Fig. 8

Fig. 9

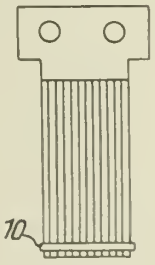


Inventor:
C. E. Eichhorn

By: Glascock Downing & Seibold
Attys

Published May 18, 1943 Serial No. 290,868

# ALIEN PROPERTY CUSTODIAN

## CALL-DIALS UTILISED, IN PARTICULAR, IN AUTOMATIC TELEPHONY

Alfred Wormser, Paris, France; vested in the Alien Property Custodian

Application filed August 18, 1939

The invention relates to call-dials utilised in particular in automatic telephony.

The invention is adapted to render the call-dials in question more practical by rendering more visible the indications of the fixed dial which is located vertically underneath the operating disc.

As is known, this operating disc, generally made of metal, is always opaque and for discerning, through the openings provided in said operating disc, the indications of the fixed dial which is located underneath the latter (or behind it when wall apparatus are under consideration) the operator is obliged to look exactly above or opposite said openings. Moreover, if the lighting conditions are defective the shadows thrown by the operating disc reduce the visibility, and even cause it to disappear, of the indications of the fixed dial.

The invention is adapted to remedy these inconveniences.

The invention is mainly characterised by the fact that the operating disc of call-dials is constituted, at least the part of the same which is located vertically above the indications of the fixed dial, of a suitable transparent material.

As will be easily understood the indications of the fixed dial are no longer darkened by the shadow of the movable disc, and it is no longer necessary that the operator should be placed, relatively to the call-dial, in such a manner that his eyes look just opposite the openings formed in the movable disc in order to distinguish the indications in question.

The apparatus placed on a piece of furniture need not then be placed exactly under the eyes of the user, it suffices that it should be within reach of his hand. The invention is very advantageous also concerning wall apparatus which can now be placed in lighting conditions which were considered defective with the operating discs utilised up to now.

The invention will be clearly understood by means of the following complementary description and the accompanying drawing which shows, in front view in Fig. 1 and in diametral section in Fig. 2 made according to line 2—2 of Fig. 1, an operating disc, devised according to the invention, for a call-dial of an automatic telephone apparatus. Said drawing also shows in Figs. 3 and 4, in a manner similar to Figs. 1 and 2, an operating disc devised according to a modification of the invention.

The first embodiment relates in particular to the call-dial of the type used by the French Postal Telegraph and Telephone Service, but similar members can be obtained with suitable shapes to fit on all the call-dials of various types.

In order to construct the disc in question, in a plate of suitable transparent material, for instance mainly composed of cellulose acetate, of transparent synthetic resin, etc. . . ., a crown 1 is cut out, in which are formed as many holes 2 as there are groups of letters or figures carried by the fixed dial.

The central hub 3 is made of metal in order to be suited to the normal construction of call-dials.

It is this hub which carries the transparent crown. For that purpose, it is for instance provided with a segment 4 on which the crown 1 is riveted by means of rivets 5. This assemblage of the hub 3 with the crown 1 can be completed by one or more claws 6.

The assemblage of the hub 3 with the crown 1 can also be advantageously effected by directly moulding the transparent material around the hub 3, the segment 4 can then be done away with; in this case, the hub 3 carries claws which are stamped for ensuring the firm hooking together of both members.

By particularly studying the construction of a call-dial, it will be seen that use can be made of a movable transparent disc made in one piece, the central member 3 being done away with or reduced to a simple ferrule or, as shown in Figs. 3 and 4 of the drawing, the central hub 3 is constituted by two elements $A^a$, $3^b$ united in a suitable manner, by means of electric spot welding for instance, which clamp the transparent disc. In one of said elements (or in both) can be advantageously provided means such as one or more small bosses, one or more small claws preventing the relative movements of the hub and the transparent disc or even of the elements of the hub with respect to each other.

The invention is particularly applicable to the production of members which are easily interchangeable with the metallic operating discs actually used, the replacement of said actual discs by those devised according to the invention unquestionably improves existing call-dials.

The operating disc, forming the subject-matter of the invention, indeed constitutes a new industrial product by the progress it ensures by rendering the call-dials much more practical and aesthetic than those devised up to now.

It is to be understood that the invention is not limited to its application to call-dials of automatic telephone apparatus, it includes in its scope all the applications in which a movable disc is operated opposite a fixed dial (or what takes the place thereof) for the composition of any sign, indication or signal.

ALFRED WORMSER.

PUBLISHED
MAY 18, 1943.
BY A. P. C.

A. WORMSER

CALL-DIALS UTILISED, IN PARTICULAR, IN AUTOMATIC TELEPHONY

Filed Aug. 18, 1939

Serial No. 290,868

Fig. 1.

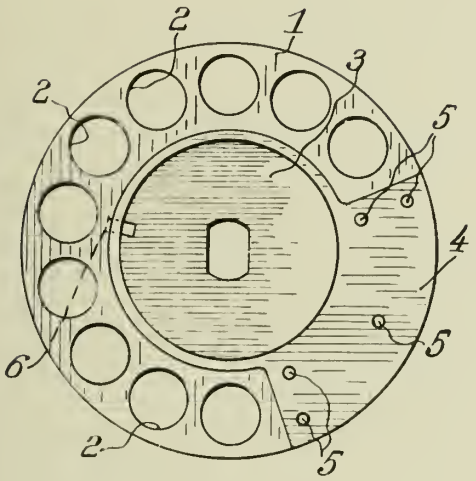


Fig. 3.

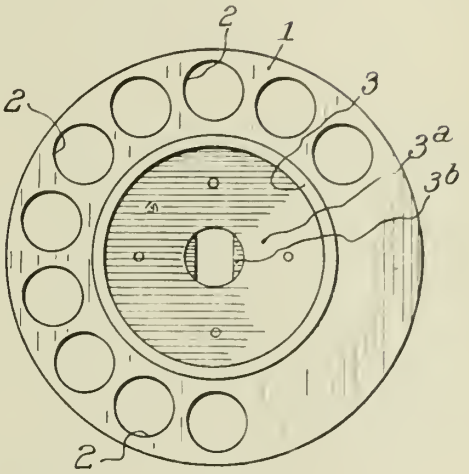


Fig. 2.

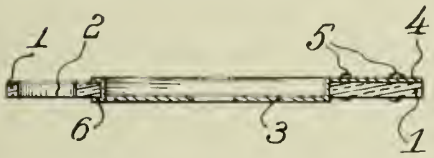


Fig. 4.

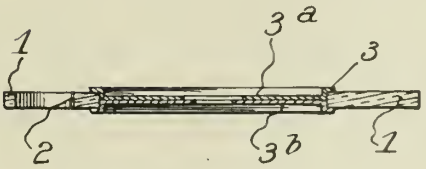


Inventor:
Alfred Wormser
By
Glascock, Downing & Seebold,
Attorneys

Published May 18, 1943 Serial No. 291,401

# ALIEN PROPERTY CUSTODIAN

## CONTROL DEVICE FOR ELECTRICAL LIGHTING INSTALLATIONS ON VEHICLES

Friedrich Menzel, Stuttgart, Germany; vested in the Alien Property Custodian

Application filed August 22, 1939

The present invention relates to regulators or the like control devices for electrical lighting and charging systems, particularly for use on vehicles.

Generally the coils of electromagnetic regulator switches of lighting or charging dynamos, installed in vehicles, are made of copper wire. The resistance of copper wire increases rapidly during use, as the wire becomes warm, by virtue of the comparatively high temperature co-efficient of copper, which is approximately $4 \cdot 10^{-3}$, and as the regulating switch should always function at a uniform voltage it is known for the copper coils to be combined with a compensating coil of nickelin wire.

Nickelin has a very small temperature co-efficient and consequently the compensating coil keeps the operating voltage comparatively independent of the temperature of the magnet winding, so that the voltage varies only within narrow limits.

A combined copper and nickelin coil however has the disadvantage that it cannot be wound automatically. In manufacturing such coils, the copper coil is wound first and the copper wire is then soldered to the nickelin wire, and finally the nickelin coil is wound.

This difficulty is avoided according to the present invention in that the coil is composed of a material which, whilst having a sufficiently high electrical conductivity, has also a small temperature co-efficient. A coil of such material requires no compensation in order to keep the regulator or switch sufficiently independent of temperature.

As an example, the coil of a voltage regulator or loading switch according to the present invention may have a winding of tombac wire, one generally manufactured form of which has a temperature co-efficient of $0.7 \cdot 10^{-3}$. A winding made from wire of this type would only produce a voltage variation of approximately 4% at a working temperature of 80° C. This value is considerably less than that of 10% which is produced by the known form of construction having a compensating coil of nickelin. Since tombac has an electrical conductivity of 20, a winding of this material is sufficiently small to be housed within the space usually provided for the windings of regulator and control devices, and it may require even less space.

Instead of tombac, other suitable material having a small temperature co-efficient in combination with the necessary electric conductivity may be used. The temperature co-efficient of such a wire should however not exceed $+2 \times 10^{-3}$ and generally should amount to $+1 \cdot 10^{-3}$ at the most. Suitable materials are, for example, alloys of copper with zinc or aluminium alloys.

The invention is further described with reference to the accompanying drawing which shows, by way of example, one form of construction of regulator switch diagrammatically.

In the drawing an electromagnetic core 1 of a regulator switch carries a voltage coil 2 of tombac, and a current coil 3. Two armatures 4 and 5 are arranged above the core 1 and operate contacts 6, 7 and 8, 9. The armature of a lighting dynamo is shown at 10, said armature having a field winding 11 and a shunt resistance 12. A battery is shown at 13.

FRIEDRICH MENZEL.

PUBLISHED
MAY 18, 1943.
BY A. P. C.

F. MENZEL
CONTROL DEVICE FOR ELECTRICAL LIGHTING INSTALLATIONS ON VEHICLES
Filed Aug. 22, 1939

Serial No.
291,401

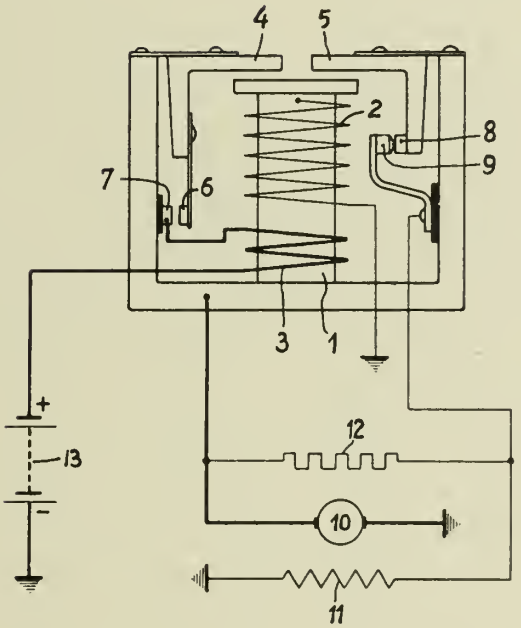


Inventor
Friedrich Menzel
by Roy F. Steward
his attorney

Published May 18, 1943 Serial No. 291,590

# ALIEN PROPERTY CUSTODIAN

## METHOD OF COATING ARTICLES BY CATHODE DISINTEGRATION

Bernhard Berghaus, Berlin-Lankwitz, and Wilhelm Burkhardt, Berlin-Grunewald, Germany; vested in the Alien Property Custodian

Application filed August 23, 1939

The present invention relates to a method of coating articles by cathode disintegration wherein the cathode material is disintegrated in a liquid state and this application is a continuation in part of our copending application Serial No. 198,557 filed March 28, 1938.

It is known in cathode disintegration to disintegrate the cathodes in a solid state, for instance, in the form of discs, wires or tape. Owing to the small disintegration speeds thereby obtained cathode disintegration has hitherto received only a limited application. It is also known that an increase in tempertaure of the solid cathode material has no substantial influence on the amount of material disintegrated.

However, it has been found that, from the melting point of the cathode material onwards, the amount disintegrated per unit of time increases surprisingly. The following results show the differences in the amounts of the disintegration as between solid and liquid cathode material.

| | Time in minutes | Watts | Disintegrated amount in mg. |
|---|---|---|---|
| Solid cadmium | 5 | 17.0 | 183.00 |
| Liquid cadmium | 5 | 154.0 | 16500.00 |
| Solid silver | 3 | 38.5 | 2.40 |
| Liquid silver | 3 | 77.0 | 160.00 |

In this comparison the surface areas of the solid and liquid material were equal. As compared with the increase in output it is found that the amount of material disintegrated increases, not only in proportion with the output but greatly beyond it. It has been further ascertained that by increasing the temperature of the molten cathode material the yield is increased.

When the cathode material is disintegrated in a molten state from a metallic crucible care must be taken that the material to be disintegrated does not form a compound with the material of the crucible. Cadmium, silver and copper have, for instance, been fused and disintegrated in a molybdenum or tungsten crucible. Other metals with a higher melting point, such as nickel, cobalt, chromium, vanadium, platinum, titanium, rhodium and the like, which readily form an alloy with other metals, may be disintegrated in non-metallic crucibles such as sintered alumina, beryllium oxide, magnesium oxide, aluminium oxide, zirconium oxide and the like.

Two forms of apparatus are illustrated by way of example in the drawings for carrying out the invention in which:

Fig. 1 is a section through cathode disintegrating apparatus, taken through the cathode and crucible; and

Fig. 2 is a cross-section through the cathode having a non-metallic crucible.

Referring to Figure 1, the side wall of the cathode disintegration vessel is represented at 2 and the chamber is sealed by means of a bottom plate 1. The cathode is preferably made of crucible shape, for instance, a metallic crucible 22 formed of molybdenum which is carried by the supporting member 6. A metal covering 18 is provided to embrace the supporting member in a spaced relation and a cap 19 surrounds the crucible. These two parts are arranged at a small distance from the supporting member 6 and from the metal crucible 22 respectively. The metal to be disintegrated is represented at 23 which is placed in the crucible 22. The supporting member 6 is insulated from the housing by an insulating disc 24 and an insulating ring 27 is employed for pressing the flange of the supporting member against the sealing ring 26. The disc 24 is also pressed against the lead sealing ring 25.

In carrying out the invention the cathode material is first arranged in the crucible 22 in the solid state and the housing is sealed and evacuated. Gas such as argon, hydrogen, nitrogen or helium may be introduced into the chamber to provide a pressure therein for permitting cathode disintegration to take place and this pressure must be between 5 and 0.001 millimeters of mercury. The cathode material is then melted by ionizing the gas within the housing and an ionic current of a glow discharge is created between the cathode material and the article 5 to be coated, or an anode. The voltage source for providing the glow discharge is represented at 30 in Fig. 1 with the negative terminal connected to the cathode support 6 and the positive terminal connected to the article to be coated, or an anode, for instance the wall of the apparatus.

The ion bombardment thus crated in the housing heats the cathode material to the molten or liquid state. Disintegration of the cathode may take place before the material in the crucible becomes entirely molten. When the cathode ma-

terial is melted however the amount of material disintegrated from the cathode increases so that the article is more rapidly coated than when the cathode remains in the solid state.

The construction shown in Fig. 2 differs from the arrangement shown in Fig. 1 merely by the fact that a metal pin **32** is provided on the cathode support **6***a*, which metal pin is inserted through a hole in the bottom of the non-metallic crucible **33**, and the crucible is supported by means of a saucer-like member **34**. The metal saucer **34** is arranged in a spaced relation from the end surface of the cathode support **6***a*, so that the transmission of heat to the cathode support shall be as small as possible. The covering **18** and the cap **19** serve as an insulation in the same manner as in the arrangement hereinabove described.

Disintegration crucibles according to the invention as above described may also be mounted in a large number in the bottom of a disintegrated chamber, in order to provide articles having large surfaces, such as metal sheets, with a protecting coating. The shape of the crucible or crucibles may be adapted to conform to the article to be covered, so that a uniform coating is obtained.

BERNHARD BERGHAUS.
WILHELM BURKHARDT.

PUBLISHED
MAY 18, 1943.
BY A. P. C.

B. BERGHAUS ET AL
METHOD OF COATING ARTICLES BY CATHODE DISINTEGRATION
Filed Aug. 23, 1939

Serial No.
291,590

Fig. 1.

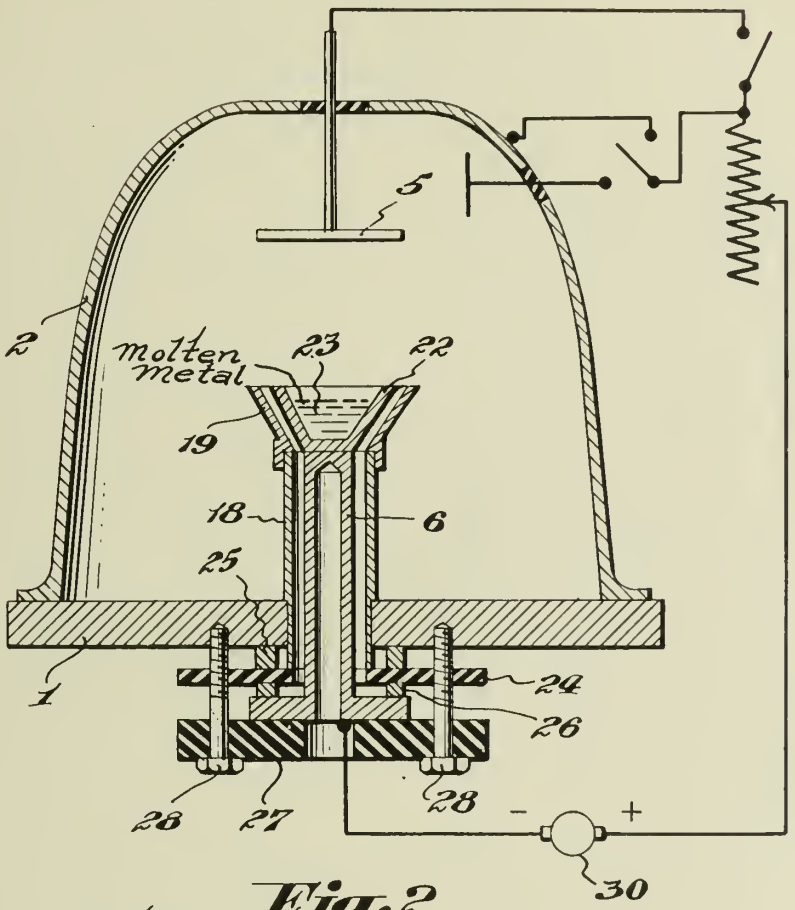


Fig. 2.

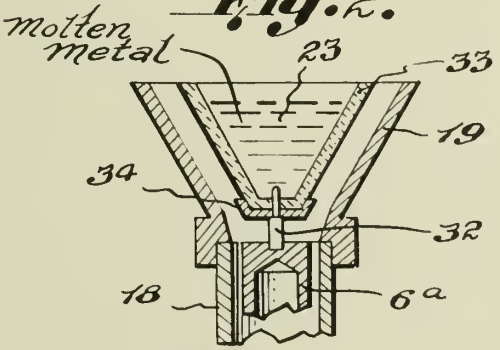


Inventor,
B. Berghaus & W. Burkhardt
Hascock Downing & Seebold
By:
Attys.

Published May 18, 1943 Serial No. 291,620

# ALIEN PROPERTY CUSTODIAN

## SOUND REPRODUCER

Eduard Schüller, Berlin-Johannisthal, Germany;
vested in the Alien Property Custodian

Application filed August 23, 1939

This invention relates to sound reproducers and particularly to a sound head for use with magnetic sound carriers or strips.

It is frequently desired to reproduce speech or music more rapidly or more slowly than it was recorded. Special precautions must of course be taken if the signals are to be reproduced at their original frequencies.

According to the present invention, the sound head is so designed as to vary the ratio of the pitch of the reproduced sound to the speed at which the magnetic carrier moves across the sound head, the variation being in such sense that the original pitch or frequency is reproduced whether the speed of the magnetic carrier is higher or is lower than the speed during the recording step. The sound recording head and the sound reproducing head are electromagnetic devices having cores with short air gaps or slots across which the magnetic carrier travels. Frequency distortion will arise when the magnetic carrier passes the gaps of the recording head and the reproducing head at different speeds, and the invention eliminates this speed difference by moving the gap of the reproducing head along the traveling magnetic carrier to make the relative speed of the carrier with respect to the gap of the reproducing head the same as the relative speed of the carrier with respect to the recording head.

An object of the present invention is to provide a sound head or reproducing head including a rotatable core member having a plurality of circumferentially spaced gaps that are brought in succession into a reading-off position adjacent the moving magnetic carrier. A further object is to provide a sound head including a rotatable core member with a plurality of reproducing gaps that progressively travel across and along the moving magnetic carrier, the gaps being inclined to radial planes through the axis of the rotating core member and the record carrier moving along a path inclined to the axis in the reverse direction, whereby the gaps extend transversely across the record carrier as they move along it. A further object is to provide a rotatable sound head of the types stated in which the record carrier travels circumferentially around the rotating head over an arc equal approximately to the circumferential spacing of adjacent reproducing gaps of the sound head. Another object is to provide a rotatable sound head having a multi-part core with a winding and a reproducing gap for each core part, and a commutator system for connecting to the reproducing amplifier only the winding of the core part that is in reading-off position adjacent the record carrier. Another object is to provide a rotating sound head including a multi-part core of the type last stated in which the overlapping of reading-off periods of successive reproducing gaps is determined by the dimensions of the commutator segments and the record carrier extends about the rotating head over an arc substantially greater than that of the spacing of adjacent reproducing gaps.

These and other objects and advantages of the invention will be apparent from the following specification when taken with the accompanying drawings in which:

Figs. 1 and 2 are diagrammatic side elevations of embodiments of the invention;

Fig. 3 is a perspective view of a rotatable sound head and slip ring connections for the windings as shown in Fig. 2; and

Fig. 4 is a fragmentary plan view of the sound head and record carrier.

In the drawings, the reference numeral 1 identifies the sound record strip or magnetic carrier that runs from right to left, as indicated by the arrows, in proximity to the rotating sound head. As shown in Fig. 1, the head consists of a plurality of individual sound reproducers carried by a disk 2 on the shaft 3. Each reproducer unit comprises a circular core 4 with its reproducing gap or slot 5 at the circumferential edge of the disk 2, and a winding or coil 6. The windings may be connected in parallel to the reproducing amplifier, or they may be in series, as shown in Fig. 1.

The magnetic carrier 1 extends circumferentially about the sound head over a substantial angle, between the dotted line radii *a*, that is approximately equal to the angular spacing of the gaps of adjacent core units 4 of the sound head. The spacing of the adjacent reproducing gaps, as measured along the circumference of the sound head, is preferably less than $\frac{1}{5}$ of the distance traveled by the magnetic carrier in one second during the recording operation. This relationship provides a good quality of reproduction for even the shortest length of recorded signals.

Assuming that the signals are to be read off at about one-half the recording speed, the sound head is rotated, as indicated by the arrow, in the direction opposite to that of the travel of the magnetic carrier 1. Each part of the record strip is thus read off repeatedly as the reproducing gaps move along the record strip, and the final effect is that of an acoustical time expanding

action. The original frequency of the recorded signals is obtained but the duration of the reproduced signals is twice that of the original signal. If the sound head is rotated in the same direction as that of the travel of the record strip, the opposite effect of an acoustical time compressing is obtained and the reproduced signal has its original frequency but is read off in less time than was required for the recording.

As shown in Figs. 2 and 3, the sound head is constructed of T-shaped laminations that are assembled in groups on the shaft **3** to form T-shaped core segments **7**, the heads of the T-segments being at the circumference of the sound head and spaced from each other by the recording gaps **4**. The core legs carry windings **8** that are connected in series between the slip rings **9** on the shaft.

The transition from one reproducing unit to another should take place progressively for high quality of reproduction. The gradual transition may be effected by running the magnetic carrier strip upon and away from the reading-off zone with a slight turning or twist, so that only gradually does the full width of the carrier strip come into close proximity to the reproducing slots. Alternatively, the slots **5'** may be at an angle to radial planes through the shaft **3**, with the path of the magnetic carrier strip **1** at the reverse angle to the shaft, as in Fig. 5. The slots **5'** thus extend transversely of the record strip, and move across the strip from one side to the other as they travel along the strip.

Since the approach of a reproducing slot to the sound carrier strip, and its departure from the strip affect the quality of the reproduction, the effective operating periods of the reproducing slots may be controlled by connecting the windings to a commutator. The length of the circumferential arc of closely adjacent travel of the magnetic carrier and the sound head may then be increased as much as desired without introducing distortion. The length of the commutator segments may be such that only one sound head unit is effective at any instant, or the segments may be designed for an overlapping of the reproductions from successive reproducing slots.

EDUARD SCHÜLLER.

PUBLISHED
MAY 18, 1943.
BY A. P. C.

# E. SCHÜLLER

## SOUND REPRODUCERS

Filed Aug. 23, 1939

Serial No.
291,620

Fig. 1.

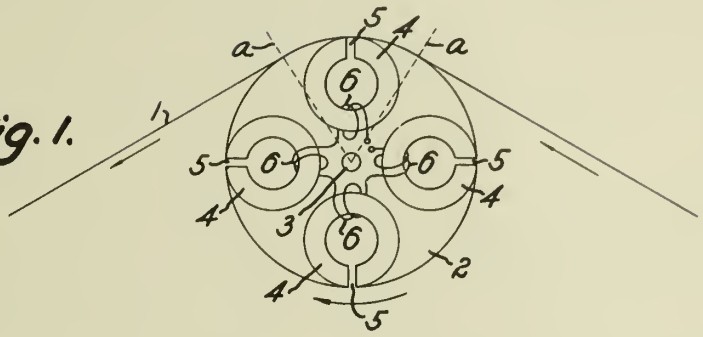


Fig. 2.

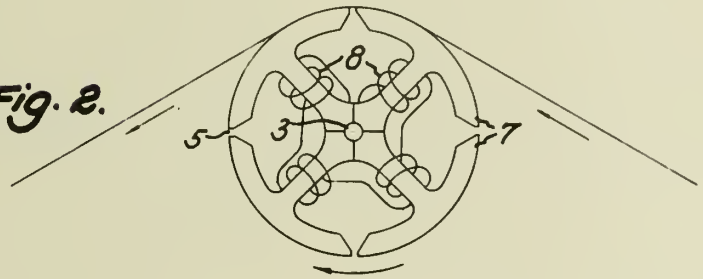


Fig. 3.

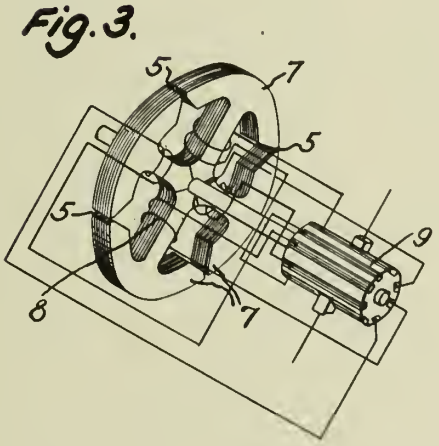


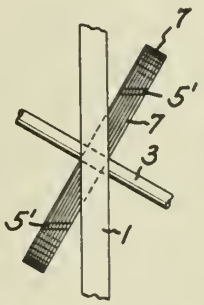


Fig. 4.

Inventor:
Eduard Schüller,
By Potter, Pierce & Scheffler,
Attorneys.

Published May 18, 1943 Serial No. 293,586

# ALIEN PROPERTY CUSTODIAN

## PERMUTATION AND ALARM LOCKS

Einer Eiby Andersen Hinnerfeldt, Kirkehoerup, Als, Denmark; vested in the Alien Property Custodian

Application filed September 6, 1939

The present invention relates to the construction of a combined permutation and alarm lock that may be connected to as well new as old locks by removing the handles and the handle spindle that is carried through the bolt nut, and connecting the permutation and alarm lock to this nut.

When employing the invention in connection with ordinary known door locking mechanisms that are provided with a bolt and a bolt nut, there is obtained partly that the lock is altered to a permutation lock which can only be opened after the adjustment of a predetermined code, and partly that the lock is combined with an alarm device that is operated upon any grip of the knobs of the lock without having previously adjusted the lock mechanism in strict accordance with the code. The alarm device may either be an audible or a visible signal, or both simultaneously, and is operated by means of contact members actuated by the lock device, or by mechanical means for transmitting the forces by means of which a person unacquainted with the code endeavours to open the lock.

The alarm device according to the invention comprises mainly an arbitrary number of coaxially arranged shafts that are inserted through a tubular sleeve member that may be connected to the bolt nut of the door lock in connection with which the device is to be used, and after the handles and handle spindle have been removed. The sleeve has a square end for engaging the correspondingly square opening of the nut. The shafts and the sleeve form together a unit that is displaceable longitudinally. Means are provided to allow the individual rotation of the shafts, but prevent their relative displacement. Each shaft has on its one end a permutation knob by means of which the operation of the lock from the outer side of the door may be controlled, and the sleeve is provided with a handle for displacing the sleeve for opening the lock from the inner side of the door independently of the permutation device. The outermost shaft and the sleeve are furthermore provided with means for coupling them together when the proper adjustments of the permutation members have taken place.

According to the invention there are furthermore provided means for locking the shafts in relation to the sleeve, said means comprising laterally extending pins on the end of each shaft, each pin coacting with an annular disc member disposed coaxially to the shaft. These annular discs have each in their inner edge a radial incision for engaging one of the pins, thus providing means for procuring engagement between the toothed wheel and toothed portion of the sleeve, when each shaft is adjusted to a position in which the pin on the shaft registers with the incision in the disc.

For actuating the alarm device according to the invention the lock is provided with a number of interconnected ring members forming a unit that is displaceable in a direction parallel to the axis of the shafts, for actuating electrical contact devices to close an electric circuit through an alarm device. The said rings are interconnected by means of rods and stays, and they correspond in number to the number of shafts, with which they are arranged coaxially in such a manner that any incorrect adjustment of the permutation members will cause the rings to catch the corresponding pin, thereby causing the alarm device to be displaced for actuating the electric contact device.

By increasing the number of shafts and with them the number of discs it is possible to provide for an arbitrary increase of combination possibilities of the alarm device, so that the device may be made absolutely proof against unauthorized use. As furthermore there is provided a disc for each separate adjustment shaft, a single incorrect adjustment of any of the permutation knobs will immediately cause an alarm to be given if endeavours are made to extract the shafts for operating the lock.

In order to facilitate the engagement of the pins by the rings of the alarm device, these rings are according to the invention irregularly dented in the edge facing the pins.

The code of the alarm device may be altered when desired so that similarly constructed alarm devices may be assembled in a manner to provide differing codes. Means are provided for allowing the rearrangement of the disc members in relation to each other. Likewise means are provided for allowing the rearrangement of the rings.

The following is a description of a device according to the invention, illustrated in the accompanying drawing in which the parts necessary for understanding the invention are shown.

Fig. 1 shows the combined permutation and alarm lock in top elevation and partly in section.

Fig. 2 is a sectional view on line II—II in Fig. 1.

Fig. 3 is a sectional view on line III—III in Fig. 1.

Fig. 4 is a diagrammatic view of a detail in section and

Figs. 5 and 6 a modified manner of construction

of a detail, seen in top and side elevation respectively, in Fig. 5 partly in section.

The members of a permutation and alarm lock according to the present invention are assembled between two end plates 1 and 2, that serve partly as guide plates for a movable part of the device comprising two rods 3 and 4 that are rigidly interconnected and spaced parallel to each other by means of split rings 5 and stays 6, and partly as assembly plates for circular discs 7 that are clamped between spacing tubes 9 arranged on clamping rods 8. The rods 3 and 4 are displaceable longitudinally in relation to the end plates, and each rod carries a lug 10 that coacts with a contact device 11.

In Fig. 1 the device is shown in its inactive position, in which it is held by means of coil springs 12 inserted between the end plate 1 and the nearest stay 6 on the rods 3 and 4. In this position the lugs 10 are out of engagement with the contact devices 11. The end plates 1 and 2 have bearings for a system of shafts comprising a spindle 13 partly surrounded by a tubular shaft 14, which again is partly surrounded by another tubular shaft 15. These shafts and the spindle are displaceable longitudinally, and means are provided for preventing their relative displacement longitudinally, but which allow them to rotate independently of each other. Such means are shown diagrammatically in Fig. 4, in which is shown a shaft 28 corresponding to either the shaft 14 or 13, and which is provided with a lug 29 engaging an annular groove formed in the inner wall of a tubular shaft corresponding to either the shaft 14 or 15.

Each shaft 13, 14 and 15 carries a radially extending pin 16 that has a length and a thickness corresponding to the width and length of the split in the rings 5 and the slots in the discs 7. The exterior tubular shaft 15 carries furthermore a fixed toothed wheel 17, which upon the displacement of the shafts engages the teeth of an interiorily toothed tubular sleeve member 18, provided with a handle 19, that projects into and is attached to the bolt of a lock 21 of conventional construction and applied in known manner to a door 20, and from which lock the handles and handle spindle have been removed. By means of the pin 19 it is possible to manipulate the door lock 21 from the inner side of the door independently of the other members of the lock device according to the invention. The shafts 13, 14 and 15 extend to the outer side of the door 20, where each is provided with a knob 23, 24 and 25 respectively, by means of which they may be rotated independently of each other, and by means of which the shafts may be displaced longitudinally as a unit. A numeral plate 22 on the outer side of the door in combination with marks on the separate knobs allows for an adjustment from the outside of the door of the shafts 13, 14 and 15 in relation to each other without actuating the rings 5, and to allow the displacement of the shafts for coupling the device to the sleeve 18 and thus to the bolt of the lock 21.

The combined permutation and alarm lock operates in the following manner. Upon turning the knobs 23, 24 and 25 in accordance with the predetermined code for opening the lock, each pin 16 is moved to register with the split in a ring 5 and with the slit in a disc 7. When hereafter the shafts are displaced for instance by extracting the knob 23, for procuring engagement between the toothed wheel 17 and the teeth in the sleeve 18, the door lock 21 can be opened by turning the knob 23. As it is necessary for opening the door lock from the outer side of the door that the shafts are coupled to the sleeve 18, it will be understood that the pins 16 must prior hereto be adjusted to their proper positions in relation to the other locking and alarm members. If endeavours are made to extract the shafts before this adjustment is made, the pins 16 will be caught by the rings 5, thereby actuating the device for operating the contact device for closing an electric current through the alarm means.

In Figs. 5 and 6 there is shown a modified manner of constructing the rings 5. In this instance the ring is formed as a projecting flange on a circular disc 26, the flange as well as the disc having a slot through which the pin 16 can pass. The disc 26 is by means of a folded edge attached to the rods 3 and 4 and clamped thereto by means of hook members 27 that are threaded for a nut, so that they are adjustable.

The details of construction of the above described device may be altered without deviating from the scope of the invention, the essential being that the rings are attached in such a manner that their position may be altered when desired.

FINER EIBY ANDERSEN HINNERFELDT.

PUBLISHED
MAY 18, 1943.
BY A. P. C.

E. E. A. HINNERFELDT
PERMUTATION AND ALARM LOCKS
Filed Sept. 6, 1939

Serial No.
293,586

Fig. 1.

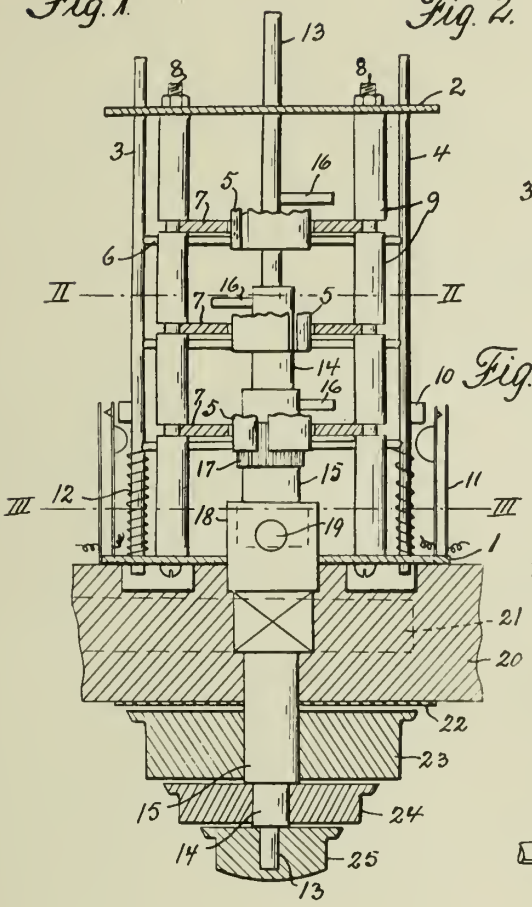


Fig. 2.

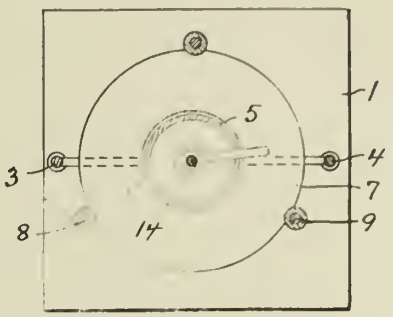


Fig. 3.

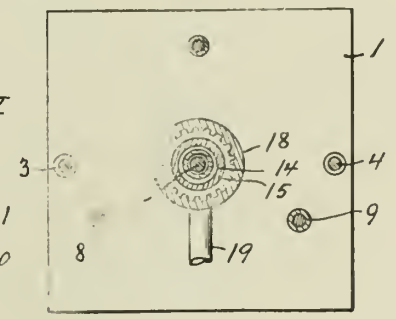


Fig. 4.

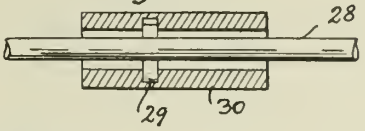


Fig. 5.

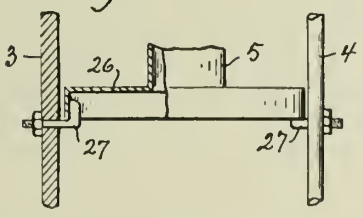


Fig. 6.

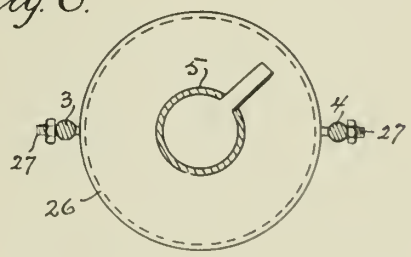


Inventor:

Einar Eiby Andersen Hinnerfeldt

Published May 18, 1943

Serial No. 295,140

# ALIEN PROPERTY CUSTODIAN

## CENTRIFUGAL DUST SEPARATORS

Adam Johannes ter Linden, Delft, Holland; vested in the Alien Property Custodian

Application filed September 15, 1939

When a centrifugal dust separator with a tangential inlet for the gas to be cleaned and an axial outlet for the cleaned gas (a so-called cyclone) has to be connected to a conduit for the supply of the gas to be cleaned, which is not horizontally directed, two bends in the gas-path are necessary. This is indicated in Figure I of the drawing in which it has been assumed, that the conduit *a* through which the gas to be cleaned is supplied and out of which therefore this raw gas flows, is exactly vertically directed. The gas must be conveyed to the inlet *c* of the centrifugal separator by means of a bend *b*, while the central outlet *d* of the separator must again be connected by a bend *f* with the usual suction blower *e*. The conditions are similar if the conduit for the supply of the raw gas is not exactly vertical but is more or less inclined to the vertical.

An object of the invention is to eliminate or reduce bends in the gas conduit, because these bends involve pressure losses. Another object is to reduce the resistance within the separator and in addition to increase the efficiency of the separator, that is to improve the separation. This reduction of the internal resistance and this increase in efficiency brought about by the invention are also obtained, when the conduit for the supply of the raw gas is horizontally directed.

According to the invention the vertical axis of the cyclone is curved, the axis of the separator head being set at right angles to the conduit for the supply of raw gas, even if this conduit is not horizontal.

The bend for the connection of the separator to the raw gas conduit is thus eliminated even if the latter is not horizontal, but is inclined or vertically directed. The connection of the separator to the usual suction blower with horizontal axis is then also without a bend if the direction of the raw gas conduit is exactly vertical. If the raw gas conduit is not quite vertical, but nevertheless is considerably inclined to the horizontal, the connection to the suction blower can be effected by means of a slight bend which entails very little pressure loss. Tests have shown that the internal resistance of the separator is reduced by the bending of the axis of the body adjoining the head of the separator. It has further been determined that the bending of the axis also improves the efficiency, that is the separation of dust, as compared with the usual separator with a straight vertical axis and outlet at the bottom. But even if these two advantages were not obtained, the transfer of the bending to the separator itself would still result with a conduit for the supply of the raw gas not horizontally directed in the first mentioned advantage, namely the elimination or reduction of bends in the gas conduit.

The invention will further be described with reference to the accompanying diagrammatic drawings in which

Fig. 1 (already referred to) shows the usual arrangement of a single separator;

Figs. 2, 3 and 4 are side views of three examples embodying the invention;

Fig. 2 is a side view of a separator where the axis is bent over its full length;

Fig. 3 is a side view of a separator with a straight axis for the cylindrical head of the cyclone and a curved axis for the conical part of the separator;

Fig. 4 is a side view of a separator with a curved axis for the cylindrical head and a straight axis for the conical part.

The axis of the separator need not be curved only in one plane, but may be curved in several directions.

The production of the bent body of the separator can also be facilitated by making the individual sections not with curved but with straight axes, which are inclined one to the next as indicated in Figs. 3 and 4.

Among its other advantages the invention also permits considerable freedom in the general setting up of the cyclone. This applies particularly to its installation in a steam boiler-house. The separator can be arranged in any position in the boiler house even if the raw gas supply conduit is not exactly vertical as in the illustrated example. The space in the boiler house can thus be better utilised so that as well as a saving in space a saving in constructional cost may be effected.

The arrangement according to the invention can also be used when a plurality of these separators are to be connected to the outlet of one vertical conduit for the gas to be cleaned.

I wish it to be understood that I do not desire to be limited to the exact details of construction shown and described, for obvious modifications will occur to a person skilled in the art.

ADAM JOHANNES TER LINDEN.

PUBLISHED
MAY 18, 1943.
BY A. P. C.

A. J. TER LINDEN
CENTRIFUGAL DUST SEPARATORS
Filed Sept. 15, 1939

Serial No.
295,140

FIG.1

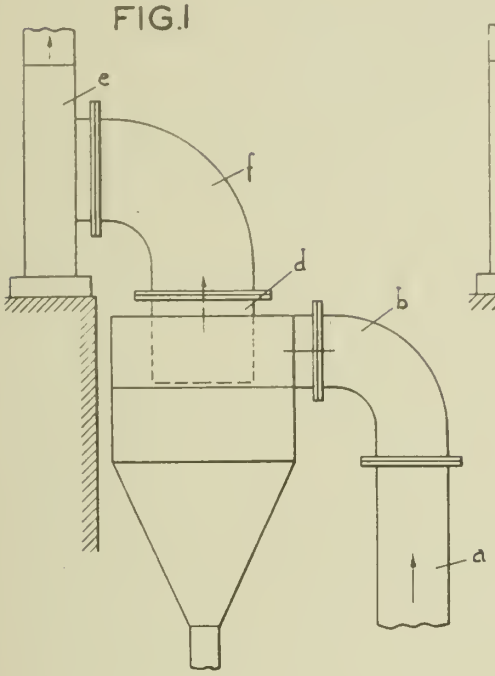


FIG.2

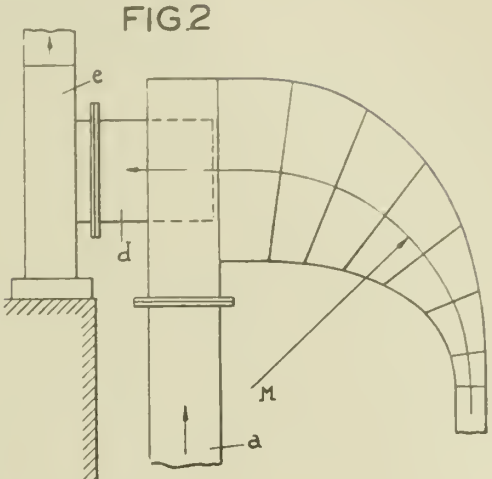


FIG.3

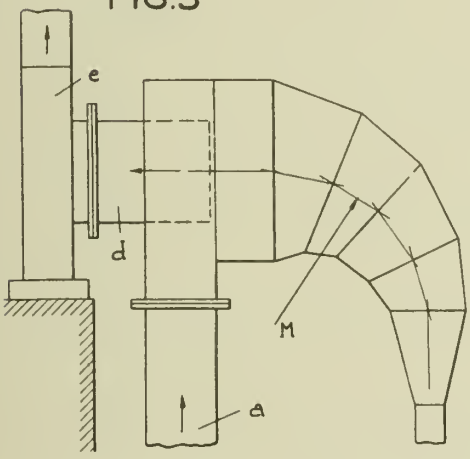


FIG.4

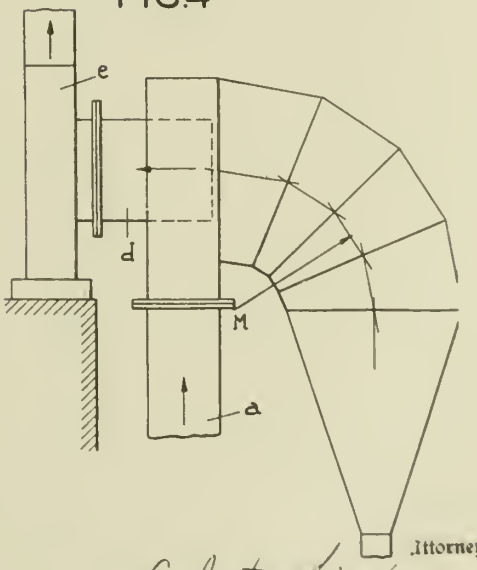


Attorney
A. J. ter Linden
By
E. O. Woodworth
Inventor

Published May 18, 1943 Serial No. 296,471

# ALIEN PROPERTY CUSTODIAN

## WRENCHES

Karl Schöttle, Bad Cannstatt, Germany; vested in the Alien Property Custodian

Application filed September 25, 1939

The present invention relates to improvements in wrenches and particularly to socket wrenches.

It is an object of the invention to provide such wrenches which indicate the amount of torque exerted by the wrench when applied to nuts, bolts, lag screws or the like.

It is another object to provide an improved wrench embodying a torsion bar as an element thereof to transmit and measure the torque exerted thereby.

It is another object to provide in such a structure means connected to opposite ends of said torsion bar to indicate the amount of twist and therefore the torque transmitted thereby.

It is another object to provide such a wrench including a tubular housing which may conveniently perform the function of protecting the relatively thin torsion bar against injury as against undue bending stresses, and also serve at the same time to support one of the elements of the indicating device to show relative movement between the upper and lower ends of the torsion bar and thus to indicate the amount of torque.

It is another object to provide such a wrench in which the indicating device is located at the upper end thereof where it may be easily read.

A further object is to provide such a wrench of slender construction so that it may be entered into and rotate within narrow spaces.

Another object of the invention is to provide a construction in which either or both of the elements of the indicating device, such as a scale and pointer, may be adjustable to permit relative readjustment thereof to take care of any permanent twisting or set of the torsion bar.

Other objects will appear from the following description of an illustrative embodiment of the invention taken together with the attached drawings wherein:

Fig. 1 shows a wrench embodying the invention, the socket member and surrounding sleeve being shown in vertical cross-section taken on the line 1—1 of Fig. 2, whereas

Fig. 2 shows a plan view thereof.

Referring to said figures, the numeral 1 indicates a usual or suitable type of operating handle serving to rotate one or another of a number of interchangeable sockets 2 which engage with the usual squared end 2*a* which may be formed as an integral part of the torsion bar 3, having an enlarged lower portion 4 and enlarged upper cylindrical portion 5, to which the handle 1 is attached. The portion 3 is preferably accurately finished by grinding and polishing to give a fine smooth accurate surface.

The invention contemplates the provision of any suitable cooperating means attached respectively to opposite ends of the torsion bar to indicate the amount of twisting and therefore the torque at any time. In the form shown this takes the form of the tube 7 which surrounds the torsion bar 3 and which is attached to the enlarged portion 4 as by means of a screw 6. The upper end 8 of said tube is journaled upon the enlargement 5 and serves to carry one of the cooperating indicating elements such as the scale 9, over which plays the pointer 11 which is shown as attached to the enlarged end 5, being clamped thereto for relative rotary adjustment as by the clamp 10. These parts are so arranged that when the wrench is not subjected to torsion, the pointer 11 will lie over the zero point of the scale.

As shown, the scale is preferably graduated in both directions from the zero point so that it will serve to indicate not only the torque when the screw or nut is being tightened but also the reverse torque when unscrewing occurs.

It is, of course, to be understood that the scale might be attached to the part 5 and the pointer connected to the sleeve 7. Various other modifications are to be regarded as coming within the principles of the invention. For example, the torsion transmitting element 3 may take the form of a tube which is especially desirable in cases where the wrench is to be made relatively short. In such cases, the torsion element may consist of a series of nested sleeves, the ends of which are so connected together as to operate in series whereby even a short wrench may be made to provide a considerable twisting motion so as to produce considerable scale movement and thereby permit more exact reading of the scale indications.

Other obvious possible modifications are that the scale may be provided with adjustable sliders so that when a predetermined torque has been applied that fact may be readily recognized or sliders may be provided which are moved by the pointer 11 so that the amount of torque applied may be read subsequently.

An important advantage is that the surrounding tube 7 not only provides means for holding one of the scale devices 9 or 11 but also serves to give rigidity to the wrench and to protect the torsion member 3 against bending. This is especially important as in many cases the member 3 must be made of rather small diameter.

KARL SCHÖTTLE.

PUBLISHED
MAY 18, 1943.
BY A. P. C.

K. SCHÖTTLE
WRENCHES
Filed Sept. 25, 1939

Serial No.
296,471

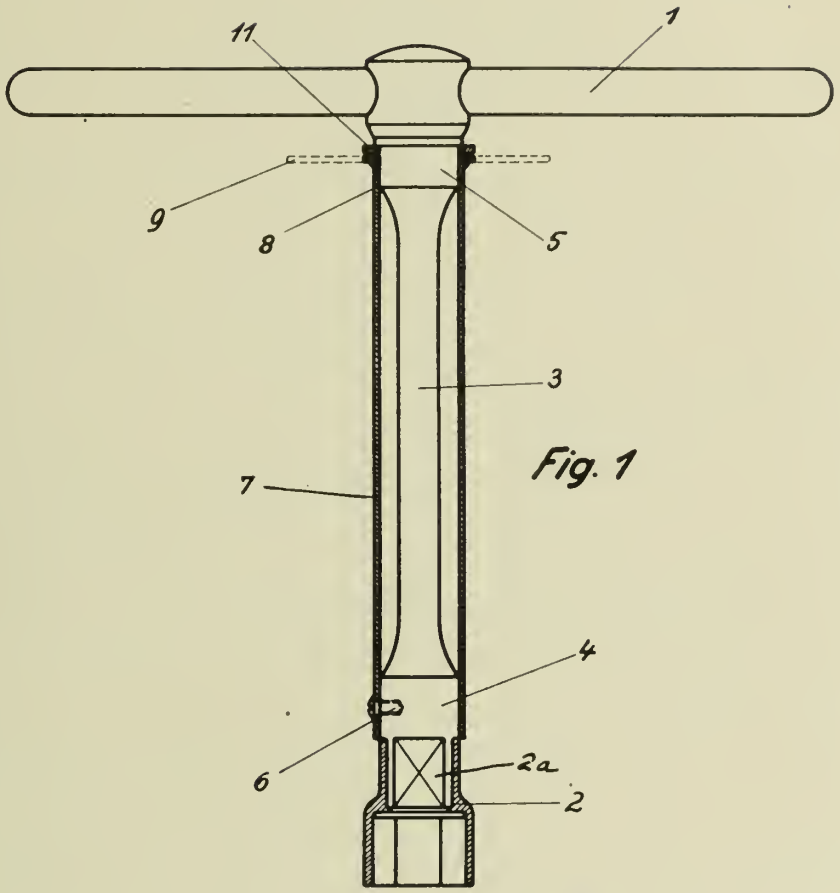


Fig. 1

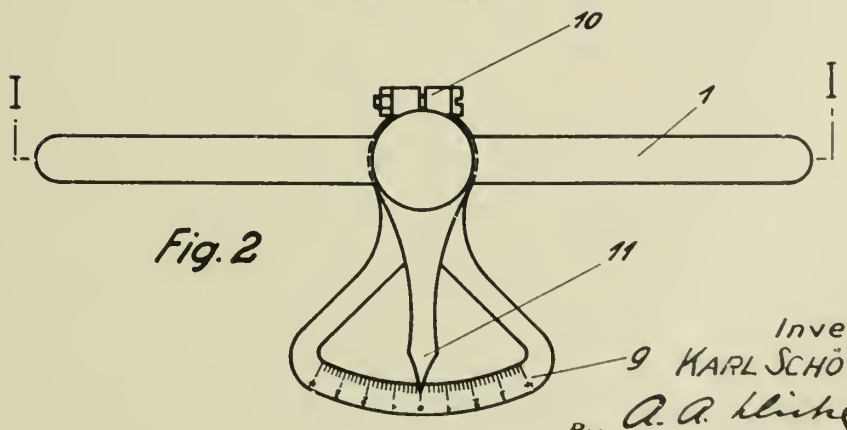


Fig. 2

Inventor
KARL SCHÖTTLE
By A. A. Klitzke
Attorneys

Published May 18, 1943 Serial No. 297,191

# ALIEN PROPERTY CUSTODIAN

## PROCESS FOR THE PROTECTION OF MAGNESIUM AND ITS ALLOYS

Jean Frasch, Cliehy, Franee; vested in the Alien Property Custodian

No Drawing. Application filed September 29, 1939

This invention relates to a process for the treatment of magnesium and its alloys in order to protect their surface with a film resistant to corrosion.

The inventor has made the surprising discovery that if one causes an acid solution containing manganese in the form of ions to act upon magnesium or magnesium-base alloys, an adherent deposit of an oxide or oxides of manganese is formed on the magnesium under certain conditions.

In carrying out my process, the magnesium-base metal is first of all immersed in an acid bath, whose $P_H$ is below 7, containing manganese in the ionised state, preferably either as $Mn^{++}$ or $MnO^{-}_{4}$, and also preferably the ion of an oxidising acid such as $CrO_4$ or $Cr_2O_7$.

These ions may be added separately, the manganese either in the form of an acid such as $HMnO_4$ or of a salt containing certain soluble anions, as for example $MnSO_4$; or they may also advantageously be added together in the form of $MnCr_2O_7$.

The magnesium-base metal which it is desired to protect may simply be subjected to chemical action in such a bath or it may be submitted to electrolytic action, preferably by the application of alternating current, the composition of the bath being modified to suit the circumstances.

If only chemical action is employed, one obtains a very thin deposit of oxides which only afford a relatively slight protection, for the reaction quickly comes to a stand still. In order to convert this layer into one which will adequately protect the metal, it is necessary to protect the film by a further coating such as for example by means of painting.

In general it is more advantageous to deposit the film of oxides electrolytically which permits of forming thicker and more adherent deposits. The brown film of manganese oxides thus obtained can be submitted to a further treatment in an alkaline solution or in boiling water, which changes the composition of the oxides. One can also submit the aforesaid brown film to a subsequent treatment in a bath of soluble silicates, or apply an exterior coating of paint.

By way of example one may proceed in putting my invention into effect according to one of the modes of procedure subsequently described.

The solutions serving for the bath are prepared by adding to a solution of chromic acid of known strength definite quantities of $MnCO_3$ (or $MnO_2$) and have a $P_H$ inferior to 7.

The electrodes are constituted by objects in magnesium-base metals it is desired to treat, and one causes an alternating current of from 2 to 12 amp/$dm^2$ to pass across the bath under a voltage of from 4 to 40 volts. The current is maintained for a period of time varying from 5 to 15 minutes. The bath is kept at room temperature.

The results obtained vary with the relative concentrations of $CrO_4$ and Nn ions. Thus if one investigates solutions with increasing content of Mn ions, while keeping the $CrO_4$ ion content constant, the reactions obtained show the following surprising variations.

(*a*) *Bath composition.*—10% $H_2CrO_4$, 1 to 2% $MnCO_3$.

The $CO_2$ contained in the $MnCO_3$ (or the oxygen of the $MnO_2$ is this latter is employed) is evolved with formation of $MnCr_2O_7$.

If one restricts the protection to purely chemical action one obtains a good pickling action. If one passes alternating current, its action deposits a film of black oxide of chromium showing traces of brown oxide of manganese, more particularly in the central portions some distance from the edges.

(*b*) *Bath Composition.*—10% $H_2CrO_4$, 3% $MnCO_3$.

Chemically one obtains pickling and electrolytically a dissolution of the magnesium. There is in neither case any appreciable deposit formed on the magnesium-base metal.

(c) *Bath composition.*—10% $H_2CrO_4$, 4 to 5% $MnCO_3$.

Chemical action gives a very thin film varying from gold to pale yellow, resembling in appearance the film produced by treatment with a solution of $K_2Cr_2O_7$ and $HNO_3$. If $SO_4$ ions are present, as in a solution containing $H_2CrO_4$ and $MnSO_4$, the thickness of the film is considerably increased.

Electrolytic action gives instead of a yellow film a deposit containing a mixture of black oxide of chromium and brown oxide of manganese.

(*d*) *Bath composition.*—10% $H_2CrO_4$, 6 to 10% $MnCO_3$.

Chemical treatment shows no apparent action. On passing an electric current, a very adherent deposit of brown oxide of manganese is formed, more or less mixed with oxides of chromium according to the quantity of free $CrO_3$.

The protective action against corrosion of this last film is excellent. One can still further increase the protection it affords by applying a fin-

ishing coating of paint or by treating it in a silicate solution. In the latter case there is a simultaneous modification of the superficial layer of oxides due to the formation of other oxides of Mn and a deposit of silica which forms an external protective coating.

These modes of procedure and the results they afford are given merely by way of example and should not in any way be deemed as limitative in their scope. Thus, for example, the concentrations of chromic acid may also be varied within certain limits, the $MnCO_3$ replaced by an equivalent quantity of $MnO_2$, $MnSO_4$ be substituted entirely or in part as the desired source of $Mn^{++}$ ions, or $MnO^{+}_4$ substituted in certain cases for the $Nn^{++}$ ions in question.

The invention also covers, as new products of industrial value, all objects in magnesium-base metals covered with a protective coating constituted either by oxide or oxides of manganese alone or by a mixture of these oxides with oxides of chromium. Objects so protected may be of course be still further protected by an exterior coating of paint or one produced by subsequent treatment in a bath of soluble silicates.

JEAN FRASCH.

Published May 18, 1943

Serial No. 297,366

# ALIEN PROPERTY CUSTODIAN

## VIBRATOR

Hans Bartels, Berlin, Germany; vested in the Alien Property Custodian

Application filed September 30, 1939

The losses occasioned in a chopper are largely due to the contact resistance set up at the contacts of the chopper. This contact resistance, in turn, is a function of the contact or bearing pressure and the ratio between the closing and the opening times of the contacts. Also the difference in the surfaces of the contacts play a rather important part. Harmful wear by heat action and migration of material at the contacts are avoided by avoiding unduly high crest currents and potentials by choosing suitable dimensions for the circuit elements. It has been discovered that in spite of the fact that these requirements are fulfilled, sparking is still too strong and that as a consequence wear and tear of the contacts is excessive and the efficiency of operation of the chopper too low.

According to the invention, to avoid these difficulties, damping materials are attached or laced contiguous to the springs which support the contacts or terminals. It will be seen that the choppers known in the prior art represent oscillation systems involving very low damping. When the terminals or contacts strike each other, thumping or rebounding, even if only slight, will always arise at the contacts; in other words, after the first contact or touch, the contact does not stay made, in fact vibration at natural frequency, particularly of the cooperating spring will arise due to the inherent resonance of some parts of the spring including the mass of the contact and this results in reiterated opening and closing of the contact. However, by placing damping on the spring or springs, such thumping will be avoidable.

The necessary damping or cushioning can be insured by attaching by pasting or cementing damping material or inserting damping material inhering greater internal friction such as natural or artificial rubber, fabric of metallic gauze and the like. When so used, the elastic properties of the said damping material could at the same time to a small or appreciable part act as the restoring or retractile force of the springs.

An exemplified embodiment of the invention is shown in the appended drawing. The vibratory springs is indicated at P and the counter springs or cooperating springs by F. Against these are placed so-called stops or abutments indicated at G which are designed to prevent these counter springs, upon the return of the vibratory spring towards the median position, from continuing to oscillate for this would prevent the opening of the contact. According to this invention, damping or cushion rings D made of rubber or metal gauze, are fitted over the various springs. For the counter springs at the same time the restoring force will be thus augmented inasmuch as the rings tend to retain the counter springs on the stops.

In order that undue heating of the damping material may be avoided, the distance between the contact and the damping material may be increased by interposing, for instance, an insert consisting of insulation material or metal. If a rubber sheath is slipped over all of the springs conjointly, which will exert pressure directly against the springs, this at the same time may secure acoustic damping or deadening of noise.

HANS BARTELS.

PUBLISHED
MAY 18, 1943.
BY A. P. C.

H. BARTELS
VIBRATOR
Filed Sept. 30, 1939

Serial No.
297,366

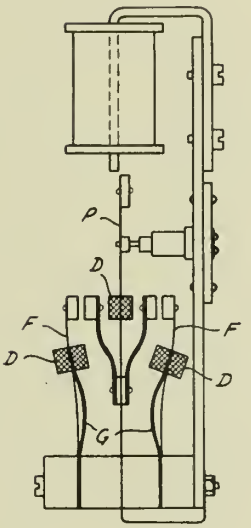


INVENTOR.
HANS BARTELS
BY H. S. Snover
ATTORNEY.

Published May 18, 1943 Serial No. 297,656

# ALIEN PROPERTY CUSTODIAN

## SHORT WAVE OSCILLATORY CIRCUIT

Andreas Jaumann, Berlin-Charlottenburg, Germany; vested in the Alien Property Custodian

Application filed October 3, 1939

The elements (more particularly the inductance) of oscillatory circuits for short waves and ultra short waves are required to have a particularly high quality (i. e., high Q). When resorting to ever shorter waves the fact is that the resultant capacitance of the oscillatory circuit cannot be reduced in the same measure as the wavelength. The limits are set by the capacitances of the circuit and of the tubes. But, if despite this fact the resonance resistance of the oscillatory circuit should be sufficiently high, the quality of the inductance is required to be greater accordingly.

In this connection oscillatory circuits having coils designed to represent surfaces of bodies were found to be favorable; these circuits have become known in the form of so-called sphere circuits. Fig. 1 shows schematically a known type of so-called sphere oscillatory circuit.

The inductance of the oscillatory circuit of Fig. 1 consists of a central copper tube Z and two copper cups $H_1$ and $H_2$. The capacitance of the oscillatory circuit is determined by the capacitance of the two annular flanges $Fl_1$ and $Fl_2$. This is increased by the natural capacity of the sphere which is low as such. The spherical construction affords as such already among other advantages an economical structure as regards the means required and space required. The disadvantage of this oscillatory circuit lies in the comparatively small surface of the coil and in the unfavorable distribution of the surfaces. Thus, the current loop (central copper tube) shows a very small surface. This disadvantage is particularly annoying if the variation of the tuning is carried out by changing the distances between the flanges, because unless provision is made at the outer edges of the flanges for displacing the same, the central inner conductor is to be provided with a threading, for instance, for the purpose of shifting the cups and therewith the flanges relative to each other. In the spherical circuit the especially unfavorabe condition is that owing to the condenser being situated at the outside, a complete shielding is not insured with simple means. It is not possible to bring about a complete shielding by connecting to each other the outer edges of the flanges forming the condenser, since in this case the condenser would thereby be short circuited. Hence, it is necessary to provide an additional shield to be placed around the sphere circuit but aside from additional means thereby required there would be obtained a further influence upon the values of the capacitance and inductance.

These drawbacks of the known sphere circuit are avoided to a great extent by the circuit according to the invention without sacrificing the advantages of the known arrangement. The fundamental idea of the invention resides in placing the condenser of the oscillatory circuit in the inside, i. e., in connecting the condenser plates at all limit edges through the coil representing the surface of a body. The oscillatory circuit for short waves and for ultra-short waves, according to the invention and in which the coil is designed to represent the surface of a body, thus consists of a closed hollow body, more especially one which is symmetrical to the rotational axis and forming at the same time the coil and the condenser; for example, a single turn toroid. Preferably, the coil is formed by an annular hollow body slotted at the inside and the condenser is formed by flat plates joined through the annular slot. The radiation of such a circuit towards the outside is null because the magnetic field as well as the electrical field remain exclusively inside the hollow space. Since the inner surface of the coil is very large and since furthermore the distribution of the surfaces is more favorable as compared with that of the spherical circuit, namely a large surface in the current loop and a small surface in the current node, there is obtained a high quality of the oscillatory circuit.

A better understanding of the invention may be had by referring to the accompanying drawing wherein Fig. 1 represents a known type of oscillatory circuit given for the purpose of exposition, and Fig. 2 represents, by way of example, an oscillatory circuit in accordance with the invention.

Referring to Fig. 2, which illustrates a preferred embodiment of the invention, it will be seen that the oscillatory circuit consists of two equal cup shaped halves $H_1$ and $H_2$ having the form shown, which are joined together in a suitable manner at the outer edges therof, such as for instance flanged together, or soldered together. The two cups which are arranged in the example shown, symmetrically to a plane extending at right angle to the rotational axis A, are pressed preferably from sheet metal more especially from copper sheet material, so that after completing the rigid joining of the two halves, the body is highly flexible. The inner surface of the cups is suitably silvered. The oscillatory circuit, according to the invention, is not limited to the mode of construction shown in Fig. 2. In another appropriate mode of construction one of

the two cup-shaped halves may be substituted, for instance, by a flat plate.

The inductance of an annular coil having but a single winding is expressed as is known as follows:

$$L = 2\pi(D - \sqrt{D^2 - d^2}).10^{-9} H \quad (1)$$

Herein is D the mean diameter of the ring and $d$ the diameter of the circular cross section. When choosing $D = 2d$, the following simplified equation is obtained:

$$L = 2\pi(2 - \sqrt{3})d.10^{-9} = 1{,}68d.10^{-9} H \quad (2)$$

For $d = 5$ cm there is:

$$L = 8{,}4.10^{-9} H \quad (3)$$

The distance between the two condenser plates is, for instance, chosen to be:

$$\delta = 0{,}2 \ . \ . \ . \ 0{,}02 \text{ cm.}$$

Then the capacity will be:

$$C = \frac{d^2}{16\delta 9.10^{11}} = \text{approx. } 10\text{–}100 \text{ pF} \quad (4)$$

The resonance frequency of the circuit will then be:

$$f = \frac{1}{2\pi\sqrt{LC}} = 170 - 550 \text{MHz} (\lambda = 1{,}7 - 0{,}55 \text{m}) \quad (5)$$

Higher natural frequencies can be readily obtained by reducing the dimensions of the circuit.

The natural frequency of the oscillatory circuit can be varied continuously by varying mechanically the distance between the condenser plates. The mechanical change of the said distance can be carried out without play in the case of a hollow body produced from flexible sheet metal, for instance by means of a screw pressing from the outside eventually together with a round disc. However, it may also be of advantage to carry out the varying of the said distance by screwing the two halves of the hollow body together or by means of a surrounding nut which presses the two halves against one another to a greater or lesser degree. In the case of a hollow body being sealed up in an air tight fashion, a further advantageous solution in varying the plate distance resides in changing the pressure prevailing in the hollow space. To this end the hollow space may be filled with any gas including air or with a non-conducting liquid having an especially favorable value of the dielectric constant.

Another way of varying the tuning exists in introducing or turning a metal disc or a dielectric inside the hollow body or between the condenser plates. Thus, inside the hollow ring an annular metal disc may be rotatably arranged so that in this way the inductance will be more or less short circuited. It is also possible to move in and out a metal disc or a dielectric between the condenser plates.

The oscillatory circuit according to the invention is utilized to advantage, for instance, in generator circuits. In this case one or several oscillation tubes may be arranged suitably inside the hollow body, whereby very short connection lines are obtained. The operating potentials are hereby applied in the neutral zone (at the outer circumference of the annular body). The energy may be derived across a wire loop rotatably arranged inside the ring.

The oscillatory circuit may also be used advantageously alone as filter element, or wherever there is need for a tuned circuit such as in an oscillator or amplifier circuit, or in connection with other elements of a circuit arrangement such as, for instance, in bridge arrangements for measurements. The oscillatory circuit of the invention can also be used for influencing an electron stream passing through the electric field of the structure, or vice versa.

ANDREAS JAUMANN.

PUBLISHED
MAY 18, 1943.
BY A. P. C.

A. JAUMANN

SHORT WAVE OSCILLATORY CIRCUIT

Filed Oct. 3, 1939

Serial No.
297,656

Fig. 1

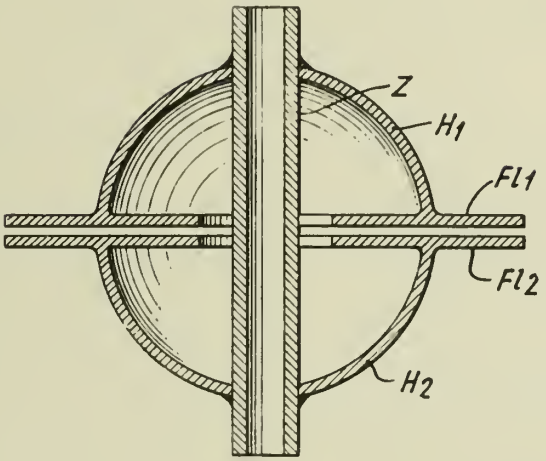


Fig. 2

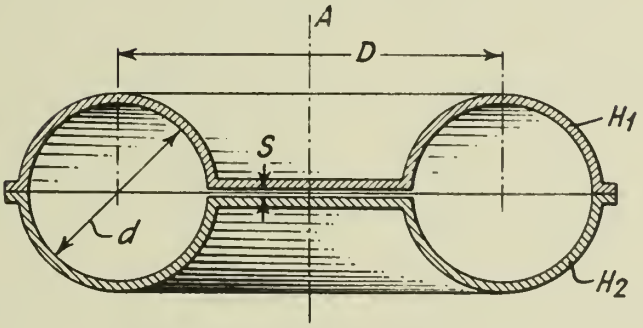


INVENTOR.
ANDREAS JAUMANN

BY H. S. Snow

ATTORNEY.

Published May 18, 1943 Serial No. 297,931

# ALIEN PROPERTY CUSTODIAN

## CONTROL DEVICES FOR VARIABLE PITCH PROPELLERS

Marcel Louis Mennesson, Neuilly-sur-Seine, France; vested in the Alien Property Custodian

Application filed October 4, 1939

This invention relates to the control devices for variable pitch propellers and it concerns more especially but not exclusively such propellers for aircraft.

Propellers the pitch of which can be varied to have two or a greater number of different values and propellers with automatically variable pitch, for which the pitch varies automatically in such a way that the speed of the engine, which drives the propeller, remains practically constant, are known.

It is also known that it is advantageous to be able to modify the value of the fixed pitch or of the average pitch of a propeller (whether having automatically variable pitch or otherwise) according to the power furnished by the engine so that the propeller can function with an optimum efficiency.

The present invention has for its object so to make the control devices for these propellers that the above-mentioned result is obtained in a simple and efficient manner.

In general, in accordance with the invention control devices for such propellers (whether having automatically variable pitch or otherwise) are so constructed and arranged that they can cause the value of the pitch of the propeller to vary automatically as a function of the power furnished by the engine which drives the propeller.

Further, in accordance with the invention such control devices can be so constructed and arranged that they can cause the value of the pitch to vary automatically as a function of the absolute pressure which exists at a suitably chosen point of the intake pipe of the engine driving the propeller.

Another arrangement in accordance with the invention is such that the control devices are so constructed and arranged that they can cause the value of the pitch to vary automatically as a function of the differential pressure which exists between two suitably chosen points of the intake pipe of the engine driving the propeller.

Another feature of the invention is to provide such control devices with an operating member placed at the disposal of the pilot for correcting the action of the automatic means and, if necessary, for replacing the said automatic means in the case of breakdown of these means.

In order that the invention may be better understood it will now be described with reference to the accompanying drawings which are given by way of example only and in which:

Fig. 1 shows, in diagrammatic elevation (parts in section) a control device constructed according to the invention and applied to a variable-pitch propeller (non-automatic).

Fig. 2 shows, similarly, an analogous device but which comprises a control lever at the disposal of the pilot.

Figs. 3 and 4 show, similarly, the same devices but to control a propeller with automatic variable pitch.

Fig. 5 shows a variation of the device according to Fig. 3.

Fig. 6 shows, similarly, the device according to Fig. 4 in the case where the carburation system is slightly different from that shown in the other figures.

In all the figures of the drawings there have been shown, diagrammatically, a part of an internal combustion engine 1 as well as a part of a propeller driven thereby, the hub 2 and a part only of the blades 3 being shown. The mechanism by which the modification of the inclination of the blades is effected has not been shown in detail on the drawings, this mechanism, which is well known, not forming the subject of the invention and being able to function by mechanical, hydraulic, pneumatic or electrical means.

The control proper of this mechanism also has not been shown in detail for it can be constituted in any appropriate manner, by being suited to the type of operation of the mechanism in question. The control is housed in a casing 4 and is operated by a member 5 (Figs. 1 and 2) or 5¹ (Figs. 3 to 6).

In Figs. 1 and 2 this operating member is constituted, for example, by a lever 5 connected by a link 6 to a piston 7 which divides a cylinder 8 into two chambers 9 and 10. These two chambers communicate, respectively by pipes 11 and 12, with a cylindrical chamber 13 in which works a distributing slide valve 14 actuated automatically by a member sensitive to pressure and, for example, by a manometric capsule 15 enclosed in a casing 16.

The distributing slide valve 14 permits a fluid under pressure (for example oil, or any other liquid, or even gaseous fluid) to be sent, by the conduit 17, into the chamber 9 or 10 according to the position occupied by this slide valve. The chamber, which is not in communication with the source of fluid under pressure, is then connected to an outlet pipe 18 for this fluid.

The manometric capsule 15 comprises a regulating nut 19 and it is subjected, by the pipe 20, to the pressure which prevails in the intake pipe 21 of the engine.

It has been assumed, for the device shown in

Fig. 1 as well as for those indicated in Figs. 2 to 5, that the engine is fed through the intermediary of a compressor 22 which compresses the combustible mixture delivered by a carburetor 23 of any appropriate type and the output of which is regulated by a throttle valve 24.

For the purpose of the present invention, the carburetion device proper does not intervene. It is simply shown to indicate its co-operation, that is to say the engine can comprise any carburation system and be fed either by a carburetor of any known type or by an appropriate system to effect the injection of the fuel into the intake pipe 21 or into the cylinders. It can also comprise a compressor, provided or not with an admission-limiting means, or be without a supercharging system.

The operation of the device, shown in Fig. 1, is the following.

It is known, when variable pitch propellers are employed, that it is advantageous, in general, to utilise a small pitch when the engine gives all its power and, on the contrary, a large pitch when the power of the engine is reduced. Now, it is a fact that the pressure in the intake pipe varies in the same way as the power of the engine. It is therefore possible to act automatically on the inclination of the blades of the propeller by utilising the pressure which prevails in this intake pipe.

For the device according to Fig. 1, this pressure is transmitted by the pipe 20 and acts on the manometric capsule 15. If the engine functions in the neighbourhood of its full power, the capsule 15 is compressed, which allows the fluid under pressure, supplied by the pipe 17, to enter into the chamber 9 by the pipe 11. The piston 7 is therefore forced from top to bottom, lowering the lever 5, which then controls the mechanism, by which the modification of the inclination of the blades of the propeller is effected, in such a direction that the pitch of the propeller has its smallest value. Inversely, if the power of the engine is reduced, the pressure in the intake pipe decreases and the capsule 15 lengthens. The fluid under pressure passes from the pipe 17 into the chamber 10, which forces the piston 7 from bottom to top and acts in the contrary direction on the lever 5. As a result thereof the pitch of the propeller acquires its greatest value. The intervention of the control of the lever 5 by the piston 7 which occupies, for each operation, one or the other of its extreme positions, shows that it has been supposed, for the example according to Fig. 1, that it is a question of a propeller with two pitches only.

Fig. 2 also shows a propeller having two pitches, but for which there have been inserted between the link 6 and the lever 5 two arms 25 pivoted between themselves, the pivoting point being connected, by a rod 26, to a hand lever 27, placed at the disposal of the pilot and which is pivoted at a fixed point 28. If it is supposed that the hand lever 27 is fixed, the operation is exactly the same as that explained for the device according to Fig. 1.

However, if the pilot desires to correct the action of the piston 7, either to effect a slight correction, or to act in place of this latter (when the servo-motor, formed by the capsule 15 and by the piston 7, was damaged), he can act on the hand lever 27 to displace the rod 26. As in a like case, the piston 7 is immobilised at one of the extremities of its stroke, it forms a fixed point and the hand lever 27 moves the lever 5 of the mechanism operating the blades of the propeller in the correct direction.

Fig. 3 shows a device similar to that of Fig. 1 but applied to a propeller with automatically variable pitch and which, for example, comprises for this purpose and as in general a centrifugal governor formed in the usual manner by rotating masses 29 the effect of which is counterbalanced by a spring 30, these masses acting on a sliding axial member $5^1$ which serves to actuate the mechanism of the propeller blades, either through the intermediary of a servo-motor, or through the intermediary of electric contactors, according to the type of propeller employed. This centrifugal governor causes the inclination of the blades in the neighbourhood of an average inclination to vary in such a way that the speed of the engine always remains practically constant. The average position of the blades 3 therefore determines an average pitch and this pitch is, obviously, a function of the tension of the spring 30 which counterbalances the effect of the masses 29.

The invention therefore consists in causing to correspond automatically to each pressure, reigning in the intake pipe 21 of the engine, a corresponding average pitch of the propeller. For this purpose, the pressure prevailing in this pipe 21 acts, through the intermediary of a servo-motor formed like that of Figs. 1 and 2, on a rod 31 adapted to modify the stress of the spring 30. Moreover, the piston 7 acts on a cam 32 which moves the fixed point of the manometric capsule 15 through the intermediary of a rod 33 and of a roller 34 which rolls on the said cam.

If the power of the engine increases, the pressure in the pipe increases in consequence and the capsule 15 contracts so as to send the fluid under pressure into the chamber 9 through the pipe 11. The piston 7 is forced from top to bottom, compressing the spring 30, which diminishes the pitch of the propeller since the speed of rotation of the engine must increase so that the masses 29 can counterbalance this new compression of the spring 30 and restore the initial position of the rod $5^1$ which controls the mechanism of the blades.

During this descending movement, the piston 7 carries along the cam 32 which forces the roller 34 and, in consequence, the capsule 15 and the distributor slide valve 14, towards the left of Fig. 3, up to the moment when this movement annuls the effect of the contraction of the capsule and when the bosses of the distributing slide valve 14 again cover the orifices of the pipes 11 and 12. At this moment a position of equilibrium is attained and it is seen that this position is solely a function of the pressure prevailing in the intake pipe 21. If this pressure diminishes—which takes place when the power required from the engine is reduced—the capsule 15 expands, the piston 7 ascends to a fresh position of equilibrium relaxing the spring 30 and, in consequence, increasing the pitch of the propeller.

The profile of the cam 32 is formed in such a way that to each value of the pressure, existing in the pipe 21, there corresponds an accurate value of the average pitch of the propeller.

Fig. 4 shows the same device but which comprises, in addition, a hand lever 27 placed at the disposal of the pilot. This hand lever is pivoted at a fixed point 28 and is connected, by the rod 26, to the pivotal connection between the two levers 25 located between the two parts of the rod 31. As for Fig. 2, this hand lever serves to

correct the effect of the servo-motor or to replace it if it ceases to function for any reason.

Fig. 5 shows a device similar to that of Fig. 3, but for which the servo-motor, controlled by the manometric capsule, has been replaced by a diaphragm **35** which separates a box **36**, in which it is housed, into two chambers **37** and **38** connected respectively by pipes **39** and **40** to two suitably chosen points of the intake pipe **21** of the engine. For the particular case of the example shown, but without this being compulsory, the pipe **39** opens into the pipe **21** downstream of the supercharging compressor **22** and the pipe **40** opens upstream of this compressor. The diaphragm **35** acts, by the rod **31**, on the spring **30**. It is urged, moreover, by a spring **41** which tends to oppose the effect of the pressure which prevails in the chamber **37**.

As in the case of Fig. 5, the differential pressure existing between the two chambers **37** and **38** increases with the power of the engine, so that the rod **31** is displaced from top to bottom, which compresses the spring **30** and, in consequence, reduces the average pitch of the propeller. Obviously, the rod **31** could be provided with the hand lever device shown in Figs. 2 and 4 for correcting the action of the diaphragm **35** on the governor **29**.

In all the cases considered any known servomotor system can be employed, without being limited to the systems indicated.

The device according to Fig. 6 is applicable in the case of a propeller with automatically variable pitch and which is driven by an engine the supercharging compressor $22^1$ of which delivers into the carburettor **23**. In this case, the power of the engine is a function of the pressure which prevails in the intake pipe **21**, downstream of the throttle member **24** and it is sufficient to make the casing **16** with the manometric capsule **15** communicate, by the pipe **20**, with this part of the intake pipe.

MARCEL LOUIS MENNESSON.

PUBLISHED MAY 18, 1943. BY A. P. C.

M. L. MENNESSON

CONTROL DEVICES FOR VARIABLE PITCH PROPELLERS

Filed Oct. 4, 1939

Serial No. 297,931

3 Sheets-Sheet 1

Fig. 1.

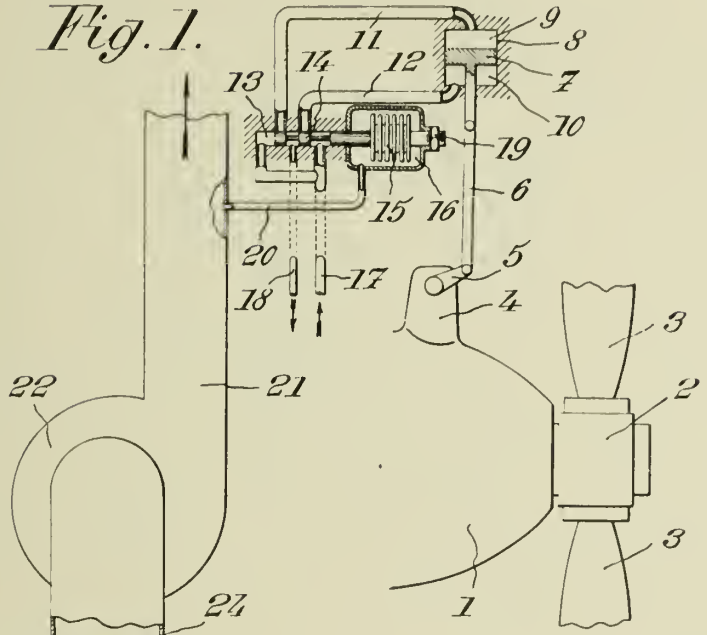


Fig. 2.

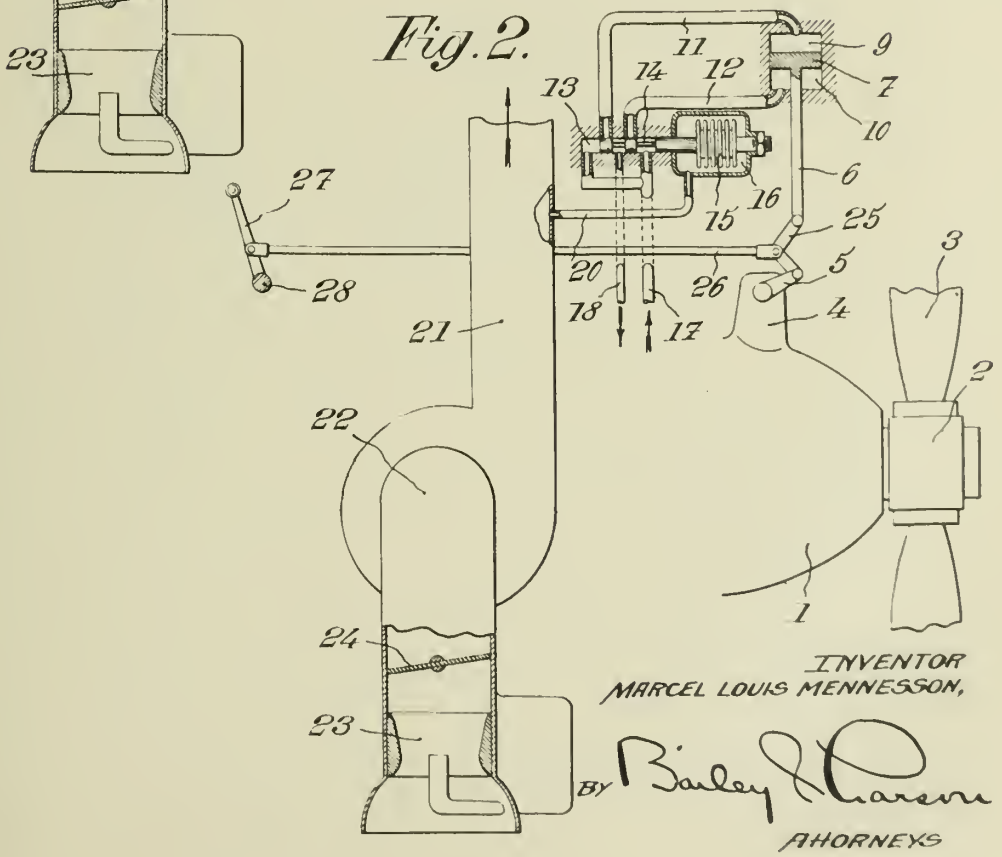


INVENTOR
MARCEL LOUIS MENNESSON,

BY Bailey & Parsons

ATTORNEYS

PUBLISHED MAY 18, 1943. BY A. P. C.

M. L. MENNESSON

CONTROL DEVICES FOR VARIABLE PITCH PROPELLERS

Filed Oct. 4, 1939

Serial No. 297,931

3 Sheets-Sheet 2

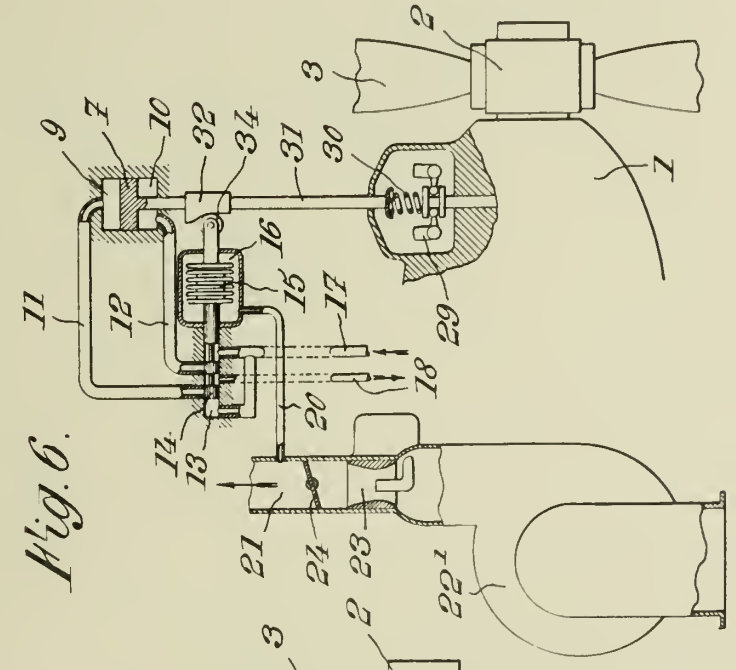


Fig. 6.

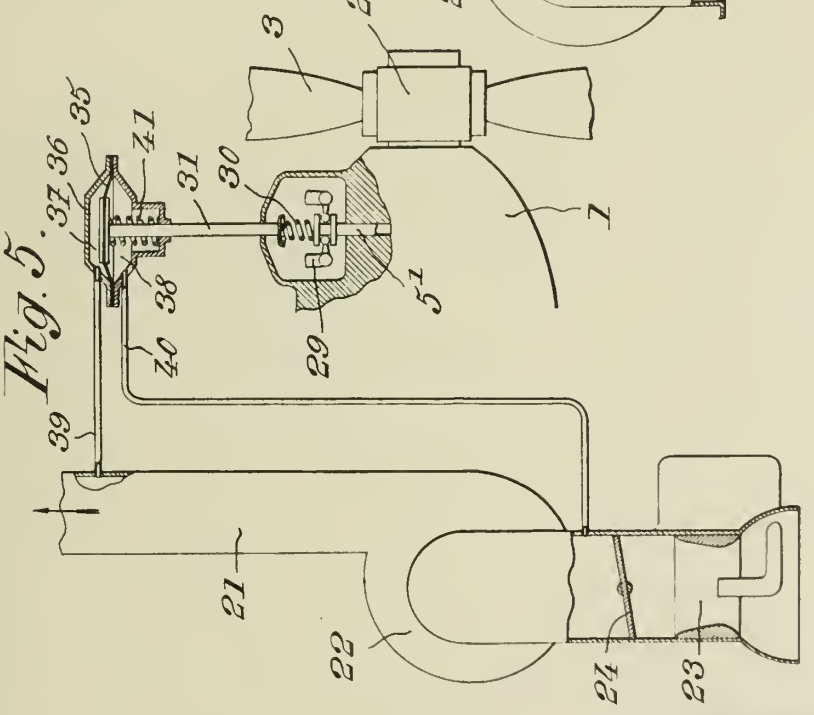


Fig. 5.

INVENTOR
MARCEL LOUIS MENNESSON,

BY Bailey & Parker

ATTORNEYS

PUBLISHED M. L. MENNESSON Serial No.

MAY 18, 1943. CONTROL DEVICES FOR VARIABLE PITCH PROPELLERS 297,931

BY A. P. C. Filed Oct. 4, 1939 3 Sheets-Sheet 3

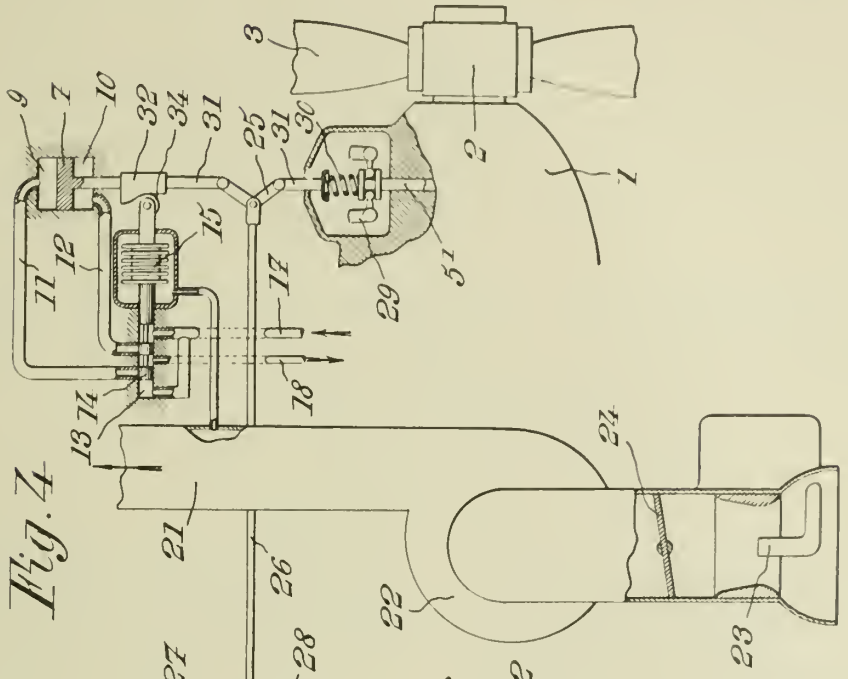

Fig. 4

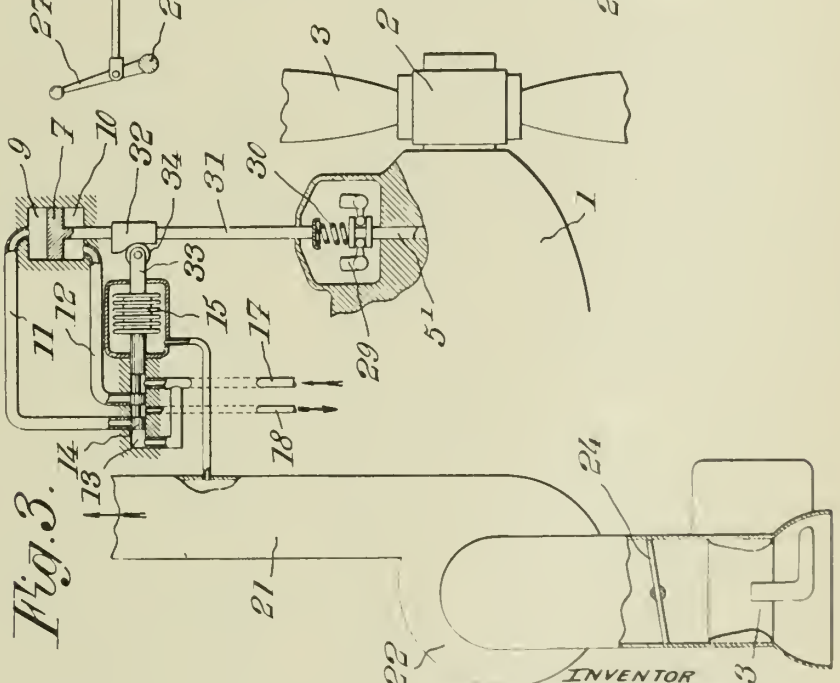

Fig. 3.

INVENTOR
MARCEL LOUIS MENNESSON,

BY Bailey & Parsons

ATTORNEYS

Published May 18, 1943 Serial No. 297,979

# ALIEN PROPERTY CUSTODIAN

## CONTACT FOR VIBRATORS

Werner Braunschweig, Berlin-Frohnau, Germany; vested in the Alien Property Custodian

Application filed October 5, 1939

A number of methods have been disclosed in the prior art to secure in vibratory inverters or rectifiers the contact platelets (P) of disk-shape and consisting of a special material such as tungsten on their metallic supports in the form of the vibratory springs F (Fig. 1) and the rigid or elastic abutments or stops G.

According to prior practice it was usual to either rivet the contact plates or else to solder or weld them fast on their supports. No really firm securing is feasible in the first-named method and the contact resistance between the contact plates and the contact support is mostly undesirably high. Another drawback is that the contact support is often bent in the work of fastening the contact thereon. As a result the contact surface is not even.

While soldering will insure a lower contact resistance than that which obtains in riveting, and while the fastening will be firmer, it is unavoidable that the contact support as a whole becomes very hot while the work of soldering proceeds. The result is that also undesirable changes happen in the contact support, especially when it consists of a spring blade. Another drawback is that the solder frequently enlarges the contact carrier to an undesirable extent.

According to another method the contact plates, after having been soldered fast upon a distinct support, were welded fast upon the contact carrier together with the latter. It has been discovered in practice, however, that the welding between the said support and the surface of the contact carrier will mostly be produced only at one or at a limited number of points. As a consequence, the contact resistance turns out to be comparatively high also in this fastening method. The weld will often be at some point about the center and at some other marginal point with the result that at diametrically opposite points of the circumference the contact plate will fail to bear snugly upon its support or carrier and that thus its working or active surface is not in a plane parallel position in relation to the surface of the contact carrier.

According to the present invention, the contact support or carrier at the junction point with the contact platelet has a hole concentric in reference to the plate, the said hole being slightly smaller than the plate itself. As a result the plate is substantially welded fast to its support only about its circumference.

The advantage offered by the invention is that really safe and secure parallel plane bearing and welding is feasible at the marginal or circumferential points. The working surface of the contact thus will be in practically perfectly parallel plane position in respect to the contact support. The securing is absolutely dependable and the contact resistance very low. Inasmuch as it is possible to weld the contact fast without any intermediary support, and since a hole is punched in the contact carrier, the mass or volume of the finished contact is very reduced. Since when making a weld the bearing surface or area is comparatively reduced (concentration of welding energy) the total welding power can be kept within very small limits. The heating of the contact carrier as a whole may therefore be practically disregarded.

An exemplified embodiment of the invention is shown in Fig. 2*a* as applied to a press contact of a vibratory inverter or chopper. Fig. 2*a* is a rear view, Fig. 2*b* a cross-section. K represents the elastic contact carrier which corresponds, for instance, to the abutment or stop G shown in Fig. 1, and into which a circular hole has been punched. The diameter of this hole is slightly smaller than the diameter of the disk-shaped contact plate consisting of tungsten.

Fig. 3 illustrates the way a contact is made. E1 is one of the welding electrodes whereby the platelet P placed concentrically over the hole of the contact carrier K is pressed upon the contact carrier, while the second electrode E2 grips the contact carrier from both sides. While the spot welding operation proceeds, the resistance at the welding point is increased and it is only the marginal zone of the contact platelet which is safely and firmly brought to bear that insures a satisfactory weld all about the entire circumference, so that a planar contact surface will be obtained. If desired, one of the electrodes may be designed so as to act as a cooling electrode.

WERNER BRAUNSCHWEIG.

PUBLISHED
MAY 18, 1943.
BY A. P. C.

W. BRAUNSCHWEIG

CONTACT FOR VIBRATORS

Filed Oct. 5, 1939

Serial No.
297,979

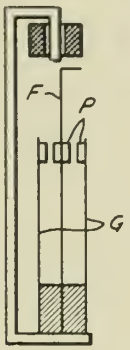


Fig. 1

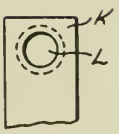


Fig. 2a

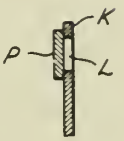


Fig. 2b

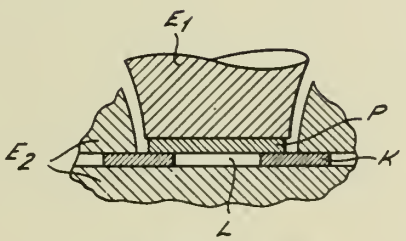


Fig. 3

INVENTOR.
WERNER BRAUNSCHWEIG

BY H. G. Brower

ATTORNEY.

Published May 18, 1943

Serial No. 298,171

# ALIEN PROPERTY CUSTODIAN

## SOUND RECORDING AND REPRODUCING DEVICES

Rudolf Milde, Berlin, Germany; vested in the Alien Property Custodian

Application filed October 6, 1939

This invention relates to sound recording and reproducing devices, and more particularly to new and useful means for eliminating disturbances heretofore observed in such devices.

It is a general endeavour in the manufacture of modern sound recording and reproducing machines to more and more reduce their size. This necessitates the different parts thereof to be arranged in close proximity to each other, from which follows that also the driving motor and the power pack through which the various parts of the machine receive their operating currents from the mains supply must be disposed rather close to the magnetic tape or wire and to the electromagnetic head or heads. Now, certain difficulties have been encountered since the stray field of the driving motor deleteriously influences not only the magnetic sound carrier or tape but also the recording and reproducing electromagnetic heads so that harmful disturbances have been introduced.

It is an object of this invention to eliminate this drawback and to secure sound recording and reproducing free of disturbances or distortions. This effect is realized in accordance with this invention by the provision of shield means for the electromagnetic head and/or for the driving motor.

The accompanying drawing schematically shows one embodiment of my invention. A cabinet 1 carries in its lower part a power pack 2, a driving motor 3 and an amplifier 4, while the magnetic tape or wire controlling mechanism 5 with its two reels or drums 6 is disposed in the upper part of the cabinet 1. An electromagnetic head 7 is arranged between the two reels 6 and in contact with the wire or tape carried by said reels. According to the main feature of this invention there is provided a screen 9, e. g. of any material of high conductivity, which wholly encloses the electromagnetic head. In accordance with a further feature of this invention further shield means 8 in the shape of a metal foil or plate is arranged in order to form a complete screen between the lower and the upper part of the cabinet 1. By using these two shields or even either thereof, the electromagnetic head 7 and the magnetic tape or wire carried by the two reels 6 are fully protected against the stray field of the driving motor 3 so that this field cannot give rise to any disturbances or distortions in the operation of the sound recording and reproducing system.

RUDOLF MILDE.

PUBLISHED

MAY 18, 1943.

BY A. P. C.

R. MILDE

SOUND RECORDING AND REPRODUCING DEVICES

Filed Oct. 6, 1939

Serial No.
298,171

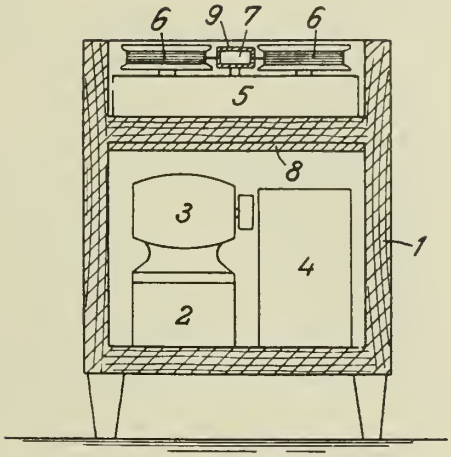


Inventor:
Rudolf Milde
by E. D. Kenney
Attorney

Published May 18, 1943 Serial No. 298,490

# ALIEN PROPERTY CUSTODIAN

## INSULATED CONDUCTOR AND METHOD OF MAKING SAME

Johannes Hoekstra, Eindhoven, Holland; vested in the Alien Property Custodian

Application filed October 7, 1939

My invention relates to insulated electrical conductors and a method of making the same, and more particularly to wire in which the insulation is surrounded by an envelope or covering which may be of insulating or conductive material, for instance lacquer, textile fabric or metal brading.

With such conductors it is desirable for the purpose of reducing the capacitance of circuits in which they are used to insulate the conductors with an insulation largely composed of air. For this purpose it has been proposed to shape the core, the insulation, or both in a particular manner, or to use insulation material which has a foamy structure.

The main object of my invention is to provide an insulated conductor in which the insulation has a low dielectric constant, low dielectric losses and very high insulation resistance, and retains these properties even when it is present in a very moist atmosphere.

A further object is to provide an insulated conductor in which the insulation is substantially incombustible and relatively inexpensive.

In accordance with the invention, I form the insulation of a foamy or spongy chlorinated rubber mass.

Such insulation is particularly suited because it is relatively cheap and incombustible, and has, even under moist conditions, a low dielectric constant combined with very small dielectric losses and a very high insulation resistance.

For the purpose of giving extra insulation the conductor may be first provided with a thin coating of an insulating material, such an enamel lacquer of any of the well known types.

In order that my invention may be clearly understood and readily carried into effect, I shall describe the same in more detail with reference to the accompanying drawing in which the single figure is a sectionized perspective view of an insulated wire which is one embodiment of the invention.

The wire shown in the drawing comprises a core 1, for instance of copper provided with a thin layer (not shown) of an enamel lacquer. Surrounding the core is a layer 2 of insulating material in the form of a foamy or spongy mass containing at least 50% by weight of chlorinated rubber. An envelope 3 of metal braiding surrounds layer 2.

In manufacturing the wire of Figure 1, the core 1, if desired with a protective layer of enamel lacquer thereon, is coated with a lacquer solution of chlorinated rubber, which solution also contains a softening agent, such as tricresyl-phosphate, and a solvent. The solvent preferably consists entirely or partly of a material which is very strongly retained by the chlorinated rubber mass, such as carbon-tetrachloride ($CCl_4$). The lacquer layer containing the chlorinated rubber is then brought into a solid state, for instance by drying in the air, in which state it still contains a considerable quantity of the solvent which is very strongly retained. By subsequent heating for a short time at a high temperature, for instance at 180° C., the layer is given a foamy or spongy structure due to vaporisation of the solvent retained.

While I have described my invention with reference to specific examples and applications I do not desire to be limited thereto because obvious modifications will appear to one skilled in the art.

JOHANNES HOEKSTRA.

PUBLISHED J. HOEKSTRA Serial No.

MAY 18, 1943. INSULATED CONDUCTOR AND METHOD OF MAKING SAME 298,490

BY A. P. C. Filed Oct. 7, 1939

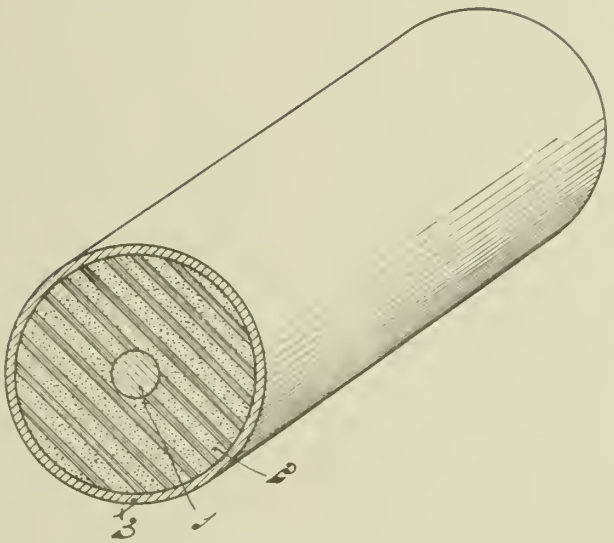


INVENTOR
JOHANNES HOEKSTRA
By
ATTORNEY

Published May 18, 1943 Serial No. 298,906

# ALIEN PROPERTY CUSTODIAN

## COMBINED TELEVISION AND RADIO BROADCAST RECEIVERS

Peter Deserno, Berlin, Germany; vested in the Alien Property Custodian

Application filed October 11, 1939

This invention relates to combined television and radio broadcast receivers and consists in certain features of novelty which will appear from the following description and be pointed out in the appended claims, reference being made to the accompanying drawing, in which

Fig. 1 schematically illustrates one embodiment of my invention, while Fig. 2 is a modification over the design shown in Fig. 1.

It is a known expedient in the art of television to provide a mirror in front of the fluorescent screen of the cathode ray tube in order to project the image at a given angle toward the observer. The cathode ray tube of this type of receivers has been arranged in a cabinet with its axis in the vertical direction and with its fluorescent screen directed upwards. The upper part of the cabinet is then provided with a hinged cover having a mirror attached to its inner surface. In television reception, the cover may be opened to a predetermined extent so that the image occurring on the fluorescent screen will be reflected toward the observer by this mirror. This arrangement involves the advantage that there is sufficient space on the front panel of the cabinet for the loudspeaker and for the various adjusting knobs and push buttons. However, the above described type of television receivers is not well adapted for use as a table set since the image reflecting mirror would be above eyesight on account of the considerable height of the cathode ray tube.

It is an object of this invention to overcome this disadvantage in a simple and reliable manner. In the combined television and broadcast receiver according to my invention, the cathode ray tube is placed with its axis in the horizontal plane in a cabinet the side-wall of which adjacent the fluorescent screen of the cathode ray tube being hinged at the rear wall of the cabinet. The hinged side-wall carries on its inner surface a mirror which is adapted to reflect toward the observer the television image which in video reception is produced on the fluorescent screen. The opening for the loudspeaker, the adjusting knobs and the radio station scale are arranged on the front panel of the cabinet.

This arrangement is particular advantageous in connection with small receivers specifically adapted to receive radio broadcasting performances, since the entire front panel may be disposed for attaching the loudspeaker, the radio station scale and the various knobs which are required for adjusting such reception. A further advantage consists in the fact that the cathode ray tube for video reception which encounters certain endangerment may be protected by a cover during radio reception. The adjusting knobs for video reception may also be placed within such cover. The reflection of the image at the mirror places a virtual image at a greater distance as seen from the observer which is very important for the effect of the image.

Referring to Fig. 1, reference numeral G indicates a cabinet in which a cathode ray tube A1 is arranged with its axis in a horizontal plane. The left side-wall E is hinged at the rear wall of the cabinet and carries on its inner surface a mirror R1 through which the image being produced on the fluorescent screen J1 of the cathode ray tube A1 may be observed when the hinged wall E is in a position as shown in the drawing. A station scale S and the adjusting knobs B1 and B2 are positioned on the front panel of the cabinet G. The television image thus produced during video reception appears to the observer as a virtual image at $x1$.

The above-described arrangement may be modified in such manner that a concave mirror R2 replaces the plane mirror R1 of Fig. 1. It is thus possible to obtain an image of equal size as in the arrangement according to Fig. 1 by using a smaller and shorter cathode ray tube since the square-shaped image on the fluorescent screen J2 of the cathode ray tube A2 may be slightly distorted by this spheric mirror. It is also possible to replace the spheric mirror by a cylindrical optic and a plane mirror in cooperation therewith. The video image thus produced on the fluorescent screen J2 sets up a virtual image at a point $x2$ as seen from the observer.

PETER DESERNO.

PUBLISHED
MAY 18, 1943.
BY A. P. C.

P. DESERNO
COMBINED TELEVISION AND RADIO
BROADCAST RECEIVERS
Filed Oct. 11, 1939

Serial No.
298,906

Fig. 1

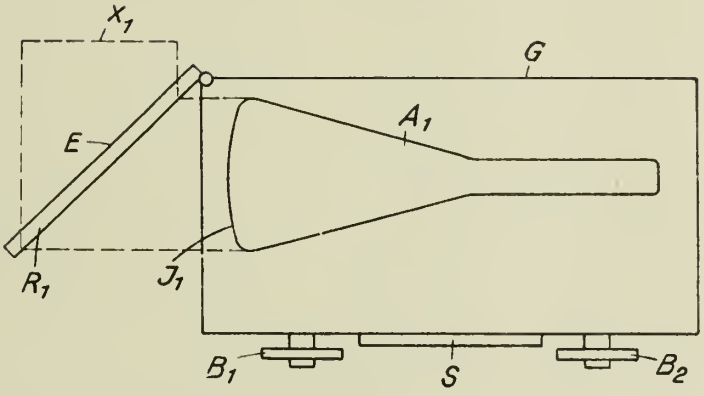


Fig. 2

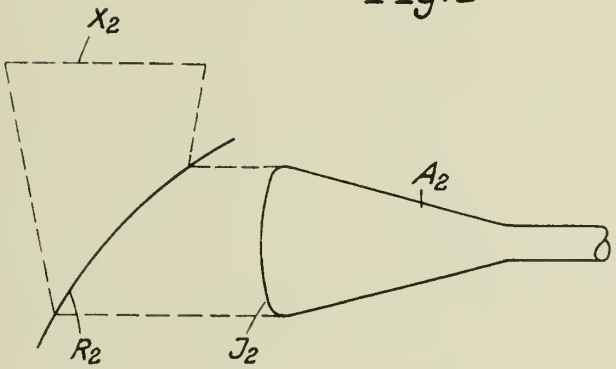


Inventor:
Peter Deserno
by E. D. Kinney
Attorney

Published May 18, 1943 Serial No. 299,393

# ALIEN PROPERTY CUSTODIAN

## MEANS FOR GUIDING MAGNETIC FIELDS

Fritz Bergtold, Munchen, Germany; vested in the Alien Property Custodian

Application filed October 13, 1939

It is known in the art to use ferro-magnetic materials for the purpose of guiding magnetic fields along desired paths. It is also known to demarcate magnetic fields by electrically conducting shields. It is moreover known in the art to guide electromagnetic radiations of ultra-high frequency in electrically conducting tubes or pipes.

Guiding by ferro-magnetic substances proves often inadequate where RF magnetic fields are dealt with for the reason that the permeability of such substances is not very high. Cases are also met within practice where any extensive use of such substances is prohibitive, say, where frequencies amounting to several megacycles are involved.

According to the invention there is used for the guiding of alternating magnetic fields a tubular structure presenting at least one insulating joint extending substantially in the longitudinal direction of the field, while the field is in the interior of the said tubular structure. The interior wholly or partially may be filled with ferro-magnetic material. Hence, as will be seen, an electrically conducting envelope or casing serves not merely as a shield or screen, but also for the guiding of the field. The conducting sheath or envelope surrounds the field in such a way that the inside cross-section of the tubular structure represents the cross-section of the field.

Figs. 1 and 2 illustrate an exemplified embodiment of the basic idea of this invention. The magnetic field which is due to the current traversing the winding W is guided by the conducting sheath or envelope H having a slot L. By the slider S which consists of a sort of material possessing high electrical conductivity the field path as given by the envelope H in the interspace Z may be blocked. The use of the envelope H in this connection allows to cut down the inductance to a large extent.

The space confined inside the envelope H may be filled with ferriferous material. The slot L moreover may consist of an insulating overlap.

Figs. 3 and 4 illustrate a practical solution and embodiment of an arrangement with variable inductance predicated upon the idea of this invention. Fig. 3 is a perspective view of the coil with winding W and the conducting envelope H of the invention. The two core parts disposed perpendicularly K1 and K2, Fig. 4, which is a section taken through the arrangement shown in Fig. 3, are flat in the direction of the winding axis, and broad at right angles thereto, so that there results a reduced axial length. In the interspace Z the conducting disk S disposed upon the shaft Fig. 3 may be turned more or less far so that the inductance is variable within wide limits.

Fig. 5 shows an arrangement in which the tubular structure is made of large cross-section at the slot Z. For given mechanical tolerance limits this is conducive to greater precision in the adjustment of the inductance.

If the inductance value of a coil is varied by altering the air-gap cross-section, this will affect, in the arrangements known in the prior art, merely that part of the reluctance which corresponds to the air-gap. The reluctance of the iron incidentally is changed only to a slight degree since the field, regardless of what the cross-section adjusted for the air-gap at any given time may be, even at a small distance from the air-gap will become distributed over the entire cross-section of the iron in a way as if the entire cross-section of the air-gap were active. Now, if the reluctance of the iron-core plays an appreciable part in comparison with the reluctance of the air-gap—and this is frequently the case in RF coils—in other words, if the said reluctance value is not very small, then, for slight reductions of the air-gap cross-section, the variations of the aggregate reluctance will be substantially less than in a case where the cross-sectional area of the air-gap has already been appreciably reduced. For it is only in the latter case that the reluctance of the air-gap has assumed such proportions that it will play a part in respect to that of the iron.

According to the invention, not only the reluctance of the air-gap is utilized, but also that of the iron, for the purpose of regulating the aggregate reluctance. This is accomplished by dividing the iron-core by means of split conducting separations or partitions extending along the field lines of force so that there result a number of sections or sub-divisions which are consecutively rendered operative or active as the cross-section of the air-gap is altered.

The drawing shows several exemplified embodiments of the basic idea of this invention. Fig. 6 illustrates a winding W which is linked with an iron-core E. This iron-core, in line with an earlier disclosure of the inventor, is surrounded by an electrically conducting, split tube R extending longitudinally of the field lines of force, with a view to causing these lines to be crowded together. Between the three parts of the iron core E are the partition walls Z of conducting material according to the invention. Into the air-gap L

which in this embodiment, for instance, is of dissimilar length for each of the three field parts, there may be shifted the electrically conducting slide S, with a view to regulating the inductance. As the said slider is being introduced, there is brought about first a variation of the cross-section of the air-gap, while the aggregate iron cross-section remains substantially active. When the leading edge of the slider S has reached the point marked A, this causes the initial part of the iron-core to be deprived of its action and to be blocked for the magnetic field. As a consequence, the reluctance of the iron-core is raised approximately 1.5 fold since the permeance is cut down to around ⅔. In order that the function between the position of the slider and the inductance value may be influenced and fixed at will, the air-gaps L for the various field parts have here been chosen of different sizes.

The advantage offered by partitions inserted according to the invention is that also in the case of iron possessing a comparatively high reluctance combined with reduced length of the air-gap, there results an interdependence between the cross-section of the air-gap and the inductance which will be roughly uniform throughout the whole range of regulation. In the absence of the partitions here disclosed, it would be necessary to provide an air-gap of great length and a correspondingly thick slider whenever low-permeability iron is used.

In the embodiment shown in Fig. 7 a rotary part of ferriferous material is provided upon which the winding is wrapped in lieu of a slider. If the said rotary part is turned away and out of the position indicated in the drawing, consecutively the outer field portions B and C and finally the field parts D and F are rendered inactive.

For a number of practical purposes, for instance, antenna transformers, it is imperative that the coupling should be made as strong as possible. One way of accomplishing this end is to use RF iron. However, even in this way it is impossible to increase the coupling beyond a certain limit for the reason that the iron exercises an intensifying action not only in respect to the joint field, but also to the stray field since the latter on part of its path traverses the RF iron. This disadvantage is obviated by the invention.

According to the basic idea of the invention, electrically conducting shielding means are disposed at right angles to the paths of the normally arising stray or leakage field lines, with the result that the field lines are compelled to cut jointly across the windings to be coupled. These shielding means are so designed that they will not constitute a short-circuiting turn for the joint field of the windings to be coupled. Separation may be insured, for instance, by providing a slot or break extending longitudinally of or along the field lines. However, the said slot could also be provided with an insulating overlap. But the shielding means could also consist of a plurality of parts electrically separated from each other in the said manner.

The appended drawings illustrate a number of exemplified embodiments of the basic idea of the present invention. Fig. 8 shows two windings W1 and W2 which conjointly surround and embrace a split metallic cylinder S. The latter could also be arranged outside the windings, though it should snugly and intimately engage the windings (contradistinct to what is true of shielding means disclosed in the prior art). The cylinder shown in Fig. 1 compels the field due to one of the two windings to almost completely traverse also the respectively other winding inasmuch as practically no field lines are able to cut across the metallic walls or the shell of the cylinder which produces a magnetic shielding action. The field line F indicated in Fig. 8 is therefore unable to arise. The slit L which is here in the form of an air break in reality is in most cases in the form of an insulating overlap so that shielding action is insured also at the very break.

Fig. 9 illustrates a transformer furnished with a bar-shaped iron-core. The shield S which, of course, must be split also in this embodiment in order that it may not act as a short-circuiting turn in this instance embraces both the iron-core K as well as the two windings W1 and W2. As a result the leakage fields will be still further diminished inasmuch as the stray fields by virtue of the shielding means surrounding the windings are prevented from forming on the outside as indicated by the field line F. To the end of insuring a still greater reduction of the stray, split or subdivided transformer windings, as known in the art, may have distinct magnetic shielding means for each of such subdivisions as illustrated by way of example in an embodiment in Fig. 10. The winding portions W in such an arrangement may be distributed in any suitable manner between the circuits to be coupled.

Figs. 11 and 12 illustrate a coil furnished with shielding means as here disclosed and with a pot-shaped iron-core. The entire space in which the windings W1 and W2 are accommodated is provided with a uni-laterally split shield. The break or slit L which is here shown open may again be furnished with an overlap.

The shielding means may also be brought upon the iron-core by a convenient electro-plating process, with the molding skin acting as a support. The slot in this case is milled after these parts have been completed.

FRITZ BERGTOLD.

PUBLISHED
MAY 18, 1943.
BY A. P. C.

F. BERGTOLD

MEANS FOR GUIDING MAGNETIC FIELDS

Filed Oct. 13, 1939

Serial No.
299,393

2 Sheets-Sheet 1

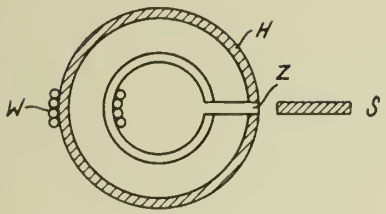


Fig. 1

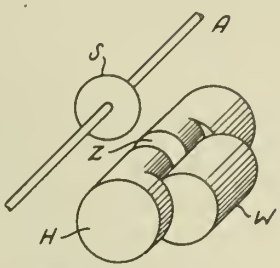


Fig. 3

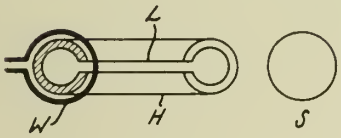


Fig. 2

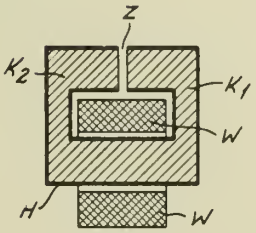


Fig. 4

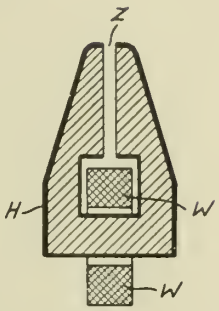


Fig. 5

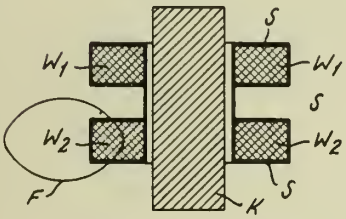


Fig. 9

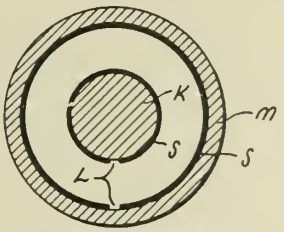


Fig. 11

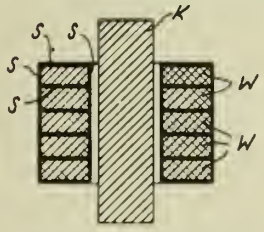


Fig. 10

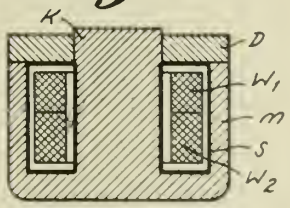


Fig. 12

INVENTOR.
FRITZ BERGTOLD
BY H. B. Grove
ATTORNEY.

PUBLISHED
MAY 18, 1943.
BY A. P. C.

F. BERGTOLD

MEANS FOR GUIDING MAGNETIC FIELDS

Filed Oct. 13, 1939

Serial No.
299,393

2 Sheets-Sheet 2

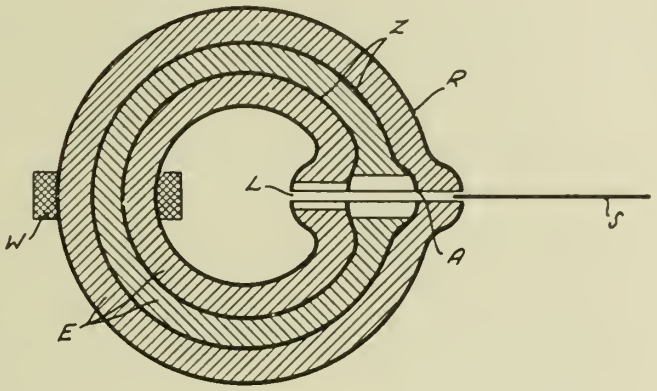


Fig. 6

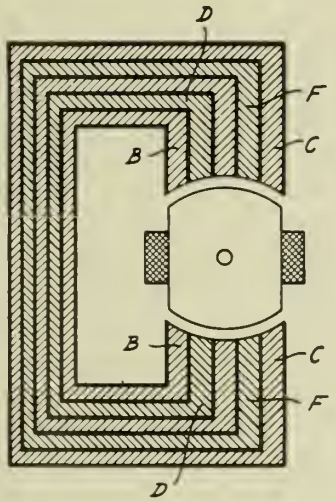


Fig. 7

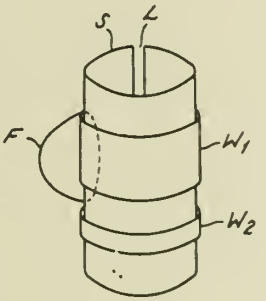


Fig. 8

INVENTOR.
FRITZ BERGTOLD

BY H. G. Grover

ATTORNEY.

Published May 18, 1943 Serial No. 299,879

# ALIEN PROPERTY CUSTODIAN

## AIRCRAFT PROPELLERS

Pietro Martinotti, Paris, France; vested in the Alien Property Custodian

Application filed October 17, 1939

The present invention relates to rotary systems including elements associated with floats immersed in a liquid, and especially mercury, contained in vessels turning together with said rotary systems, said floats balancing, at least partly, due to the hydrostatic thrust acting on their immersed portions, the action of the forces, and especially the centrifugal force, on said elements. The invention is more especially, although not exclusively, concerned with screw propellers for aircrafts.

The chief object of the present invention is to provide a system of this kind which is better adapted to meet the requirements of practice than those used up to the present time.

An important feature of the present invention consists in connecting together at least some of the liquid vessels of the system, these vessels being either directly interconnected or in communication with a compensating reservoir, and in providing means for connecting the elements to the body of the system such that said elements can have certain radial displacements with respect to said body.

Another feature of the present invention, relating to systems of the type above described having oscillating elements, consists in locating the axis of rotation of the rotary system and the swivel connections of the inner parts of the elements with the body at a distance from each other.

According to another feature of the present invention, relating to systems of the type above mentioned including movable elements, in order to compensate for the perturbing torques which act on these elements, I provide, in the floats which are to be associated with said elements, hollow parts or recesses arranged in such manner as to produce compensating hydrostatic torques.

Still another feature of the present invention, relating to the case in which the elements of the system are slidable in the radial direction so that their useful length can be varied, consists in obtaining this variation of useful length by varying the level of the liquid in the vessels, or by modifying the floating qualities of the floats associated with said elements.

Other features of the present invention will result from the following detailed description of some specific embodiments thereof.

Preferred embodiments of the present invention will be hereinafter described, with reference to the accompanying drawings, given merely by way of example, and in which:

Fig. 1 is a diagrammatic axial view of the mounting of a propeller blade, according to the invention;

Fig. 2 is a transverse sectional view corresponding to Fig. 1;

Figs. 3 to 5 inclusive are diagrams intended to permit of defining some parameters which will be hereinafter referred to;

Figs. 6 to 8 are diagrams illustrating other features of the invention as applied to oscillating blade propellers;

Fig. 9 is a diagrammatic sectional elevation view of a device for controlling the pitch of the blades of a propeller, according to the invention;

Fig. 9*a* is a diagrammatic transverse section corresponding to Fig. 9;

Fig. 10 is a view similar to Fig. 9 and corresponding to another embodiment of the present invention;

Fig. 10*a* is a diagrammatic transverse section corresponding to Fig. 10;

Fig. 11 is a sectional view, on an enlarged scale, of a mechanism for controlling the radial displacements of the blades of said propeller in accordance with the pitch variations.

In the following description, it will be supposed that it is desired to provide a propeller for an aircraft, having blades which are maintained against the action of the centrifugal force by floats immersed in a liquid which is caused to rotate together with the propeller, said blades being, for instance, adapted to oscillate on the inside of a cone the apex of which is at the point of articulation of the blade with the propeller hub.

This propeller, according to the present invention, includes a hub **1** on which the blades **2** are pivotally mounted through the medium of swivel joints **3** or the like.

The inner end of each blade **2** is provided with one or several floats **4** adapted to be immersed, when hub **1** is rotating, in the liquid **5** (preferably mercury) present in a chamber **6** provided for this purpose in said hub.

According to an important feature of the invention, the center $O_2$ about which blade **2** pivots is located at a distance from the axis of revolution $X_1X_2$ of hub **1**.

In Fig. 3, I have shown a system of coordinates intended to permit of defining the elementary movements of blade **2**, with a view to clarifying the description.

Y designates a plane $Y_1O_2Y_2$ passing through $O_2$ and perpendicular to $X_1X_2$, said plane intersecting this last mentioned axis at $O_1$.

X designates a plane $Z_1O_2Y_1$ passing through

the rotation axis $X_1X_2$ and perpendicular to plane Y.

Z designates a plane $Z_1O_2Y_2$ passing through $O_2$ and perpendicular to both of the above mentioned planes.

If, now, the axis $O_2W$ of the blade is projected on planes X and Y, I obtain two straight lines the angular coordinates $\alpha$ and $\beta$ of which determine the position of the blade axis in space.

It is then possible to define the variations of pitch of the propeller (that is to say the displacements of blade **2** about its axis $O_2W$) through the angular coordinate $\gamma$ of a straight line $mn$ which is the projection of a straight line $m^1n^1$ passing through $O_2$ and parallel to a chord MN of a blade section chosen as direction of reference. In the following description, angle $\gamma$ will be called the "angle of rotation of the blade in plane Z".

It will be readily understood that each of the blades **2** mounted, according to the invention, on a swivel **3** remote from the axis $X_1X_2$ can freely take a position determined by the action of the external forces on said blades.

As inclinations $\alpha$ and $\beta$ are without any substantial influence on the power and pull characteristics of the propeller, each blade **2** can be allowed freely to assume the position it occupies, in planes X and Y, under the action of said forces.

This freedom of the blade gives, in particular the following advantages: the bending stresses of said blade will be substantially reduced, which will permit of reducing also its weight, and a suitable choice of the constructional parameters (shown by Fig. 4) of said blade (in particular distance $R_oR_f$ between $O_2$ and $O_1$, respectively, and the center of gravity $I_1$ of float **4**, and also the masses of said floats) will permit of reducing the natural period of oscillation of the blade down to a value of the same order of magnitude as that of the cyclic irregularities of the driving shaft, blades **2** being thus free, at least partly, from the action of said cyclic irregularities.

If it is now necessary or desired to modify the pitch of such a propeller, it will be necessary to vary the angle $\gamma$ of each blade.

In order to produce variations of the value of the angle in question, it will be necessary to overcome the action of the torque due to the centrifugal forces which tends to pivot the blade about its axis.

Considering (Fig. 5) a section of the blade on which act the external forces capable of being decomposed into two centrifugal forces $F_2$ and $F_3$ the projections of which on a plane $z$ parallel to Z are respectively shown at $F'_2$ and $F'_3$, and produce, with respect to the axis of the blade, an elementary torque which tends to rotate said blade about its axis, and considering then that the section that is considered is a mean section of the blade on which the whole mass of the latter has been concentrated, the torque produced by forces $F'_2$ and $F'_3$ will be the perturbing torque which tends to pivot the blade.

According to another feature of the present invention, this perturbing torque is compensated by providing, in floats **4**, recesses $C_2$, $C_3$ such that, when they are filled by liquid **5**, they produce, in the hydrostatic thrust of said float, a disymmetry which involves the formation of a compensating torsional torque.

In other words, things will be arranged in such manner that the remaining portions of the float are subjected to centripetal thrusts $f_2f_3$ which are decomposed, in a plane parallel to plane Z, into forces $r'_2$ and $f'_3$ such that their moment (with reference to the axis of the blade) is, at any time, of a value and a direction opposed to the corresponding value and direction of the perturbing torque components $F'_2$ and $F'_3$. In this way, the perturbing torque will be balanced at any time.

Due to the important effect of the kinetic potential of the blades of an airscrew propeller, it is necessary to obtain a perfect balancing of the blades with respect to one another in such manner as to avoid any unbalanced mass.

According to a feature of the invention, illustrated by Fig. 6, this balancing is obtained, in the case of a propeller having several blades, such as **2***a* and **2***b*, by providing, between the chambers **6***a* and **6***b* in which are respectively located the floats **4***a* and **4***b* rigid with said blades, communications such that they permit the flow of the liquid **5** from one chamber into the other, the blades **2***a* and **2***b* being mounted in such manner as to be radially slidable.

For this purpose, for instance, I connect chambers **6***a* and **6***b* together through channels **7***a* and **7***b* arranged below the cylindrical float surface, and I provide the swivel joints **3***a* and **3***b* with radial bores which permit radial displacements of the blades with respect to the axis of revolution.

It will be readily understood that, due to the interconnection of the chambers of the various blades, the level of the carrier liquid is in the form of a cylindrical surface the center of which is not on the geometrical axis of the hub but on the instantaneous rotation axis of the whole of the propeller.

In other words, a constant or variable lack of centering in the rotation of the propeller carrying shaft will have no detrimental effect on the concentricity of the blades **2** and of their axis of rotation. Furthermore, an increase of mass, or of centrifugal radial external reaction between two blades will be automatically compensated by a transfer of a suitable amount of the carrier liquid from a chamber into the other, due to the greater immersion of the float of greater weight, and inversely.

It should be noted that the same automatic balancing effect would be obtained in the case of a propeller having a single blade by causing the chamber which corresponds to the blade to coact with an opposed chamber of the same bore.

Thus, an accurate dynamic balancing will be permanently obtained, whatever be the static or dynamic lack of balance of the elements which constitute the propeller, and despite periodical irregularities of rotation of the propeller carrying shaft.

Then, advantageously, when the propeller blades are slidably mounted in their swivel supports, which is, in particular the case of a propeller in which the balancing is obtained by intercommunication between the chambers, this possibility of radial displacement of blades **2** can be utilized for varying the diameter of the propeller.

For this purpose, according to the invention, I may provide means for varying the level of liquid **5** in chambers **6**.

Or, according to another embodiment, I may provide means for modifying the floating qualities of floats **4**.

The first of these solutions can be obtained, for instance, as shown by Fig. 7, by causing to

coact with chambers **6** a pump **8** which permits of transferring a certain amount of liquid **5** from said chambers toward an auxiliary chamber **9**, which constitutes a reservoir, or, inversely, from said reservoir toward chambers **6**, the first of these operations producing an increase of the diameter of the propeller and the second a reduction thereof.

The second solution can be carried out, for instance, as shown by Fig. 8.

In this case, float **4** is made of a size insufficient for producing the full support of the blade, and the preponderating action of the centrifugal force over the hydrostatic reaction of the float is compensated by an elastic device such, for instance, as a spring **10**, of a tension which may be adjustable or not.

In this embodiment, any variation of the number of revolutions of the propeller will automatically produce a corresponding variation of its diameter, and it will be possible, through a suitable choice of the characteristic parameters of the abutment system of each blade, to arrange that the automatic variations of diameter take place according to a suitable law.

In the preceding description, I have not mentioned means, either automatic or controlled at will, for producing variations of angle $\gamma$, that is to say of the pitch of the propeller.

If it is desired, for instance, to place this angle under the action of a mechanism, either automatic or operated at will, while maintaining the freedom of rotation of each blade in planes X and Y, and, eventually, the freedom of radial sliding, I may make use of the embodiment of Figs. 9 and 9*a*.

According to this embodiment, the inner end of each blade is hollowed out and the housing **11** thus obtained serves to the passage of a control shaft **12** one end of which is connected to blade **2** through the intermediate of a Cardan or similar joint **13**, with, possibly, a sliding element, the center of which is preferably made to coincide with the center of swivelling $O_2$ of the blade that is considered.

The other end of said shaft is kept connected to the hub **1** of the propeller, with an articulation **14**.

I provide a device for controlling shaft **12** such that it permits of imparting rotation movements to said shaft, which system may be constituted, for instance, by fixing on the side of shaft **12** a lever **15** carrying a crank pin **16** connected through a rod **17** with a servo-motor **18** placed either under the direct control of the pilot or under that of any automatic mechanism.

I may also, according to another feature of the invention, produce the automatic pitch variation by making use of unbalancings as may occur between the forces applied to the blade.

It has already been suggested to pivot each blade of a propeller about an axis making an angle with the radiuses passing respectively through the center of gravity and the center of aerodynamic pressure of the blade.

The moments, with respect to this axis, of the aerodynamic and centrifugal forces, acting in opposite directions, then balance each other and any relative variation of these forces, as a function of variations of the conditions of use (speed of rotation, forward speed, density of air, etc.) produces a variation of the pitch of the propeller.

In the case of a propeller made according to the present invention, such operating conditions will be obtained by providing, as shown by Figs. 10 and 10*a*, at a suitably chosen point of blade **2**, a second swivel articulation **19**, and compelling this joint to move only in a plane perpendicular to the axis of rotation $X_1X_2$.

This will correspond in fact to materializing an axis passing through joint **19** and $O_2$, and about which the pivoting of the blade must take place.

For this purpose, I may for instance, connect swivel **19** with a connecting rod **20**, itself fixed to hub **1** through a swivel **21**.

Owing to a suitable designing and dimensioning of these elements, it is possible to obtain a propeller the automatic variation of pitch of which takes place in accordance with a law corresponding to the requirements of practice. However, it will be possible to modify at will, eventually while in flight, the conditions of equilibrium of the blade, and, therefore its pitch, either by modifying the length of connecting rod **20** or by producing a translatory movement of swivel joint **20** parallel to the axis of rotation of the propeller.

It is further possible, in order to make automatic the variation of the pitch of the propeller, to dimension recesses $C_2$ and $C_3$ (Fig. 5) in such manner that the compensating torque they produce for increasing the pitch of the propeller is greater than the opposed torque produced by the blade. Then this difference is compensated by an elastic resistance which may be constituted, for instance, by replacing shaft **12** (Fig. 9) by an elastic torsion bar.

The balancing of the blade being obtained for a given speed of revolution of the propeller, any increase of the speed will produce an increase of the pitch and inversely.

With such an arrangement, I obtain an automatic propeller of the "constant speed" type, but it will remain possible to act, through any known means, on the tension of the spring and thus to adjust the conditions of automaticity.

Finally, it is possible, in the case of a propeller of variable diameter, to obtain an automatic variation of the pitch, by causing any variation of diameter of the propeller to correspond to a variation of the pitch.

For this purpose, it is possible, advantageously, to provide, as shown by Fig. 11, in the recessed portion **11** of blade **2**, a shaft **12** provided at its outer end with a Cardan joint **13**, connected to blade **2** by means of a piece **13***b* provided with helical external grooves coacting with similar internal grooves provided in blade **2**.

In this way, I obtain an automatically variable pitch and diameter propeller which can however be controlled in flight by turning shaft **12**, as above explained.

Whatever be the particular embodiment that is chosen, the advantages and operation of the variable pitch propeller according to the invention result sufficiently clearly from the above description for making it unnecessary to enter into further explanations.

PIETRO MARTINOTTI.

PUBLISHED
MAY 18, 1943.
BY A. P. C.

P. MARTINOTTI
AIRCRAFT PROPELLERS
Filed Oct. 17, 1939

Serial No.
299,879
3 Sheets-Sheet 1

Fig. 1.

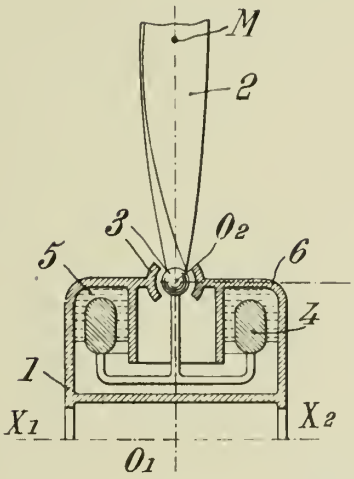


Fig. 2.

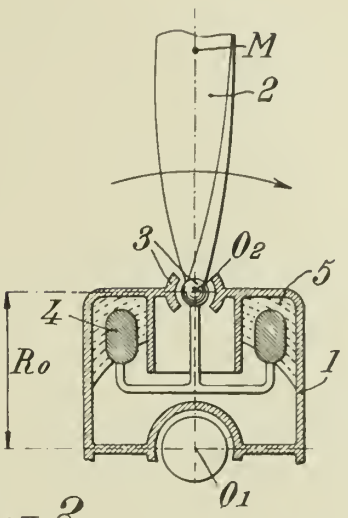


Fig. 3.

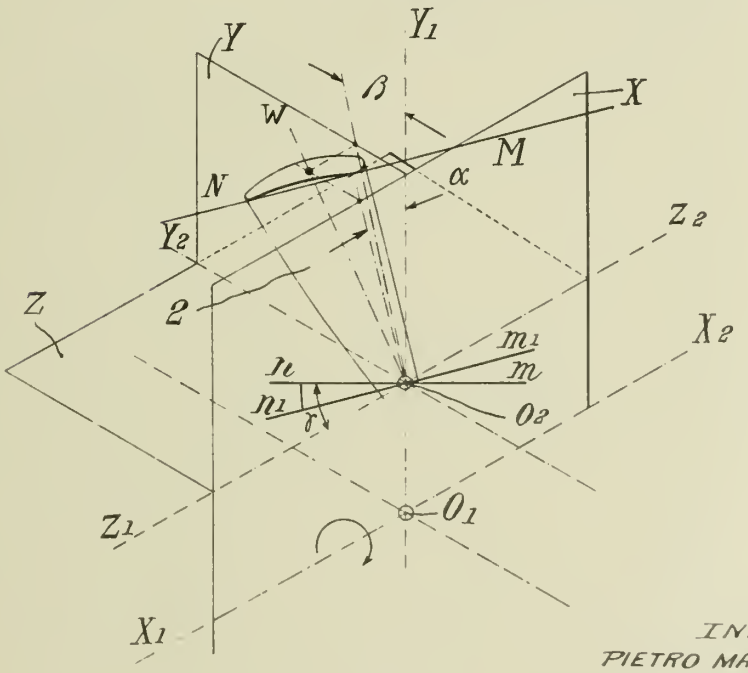


INVENTOR
PIETRO MARTINOTTI,
BY Bailey & Parker
ATTORNEYS

PUBLISHED
MAY 18, 1943.
BY A. P. C.

P. MARTINOTTI
AIRCRAFT PROPELLERS
Filed Oct. 17, 1939

Serial No.
299,879
3 Sheets-Sheet 2

Fig. 4.

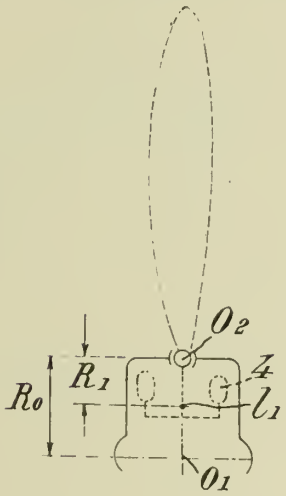


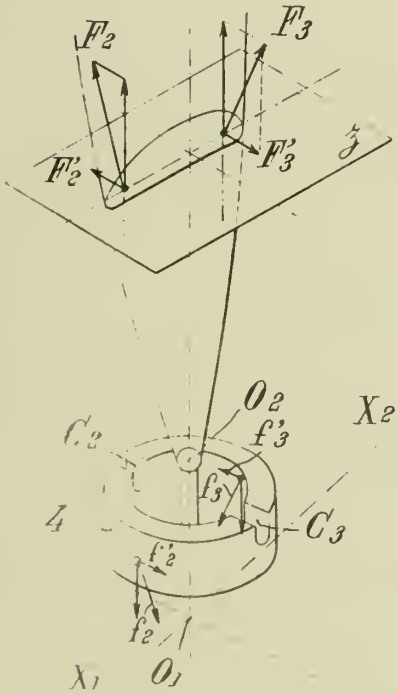


Fig. 5.

Fig. 6.

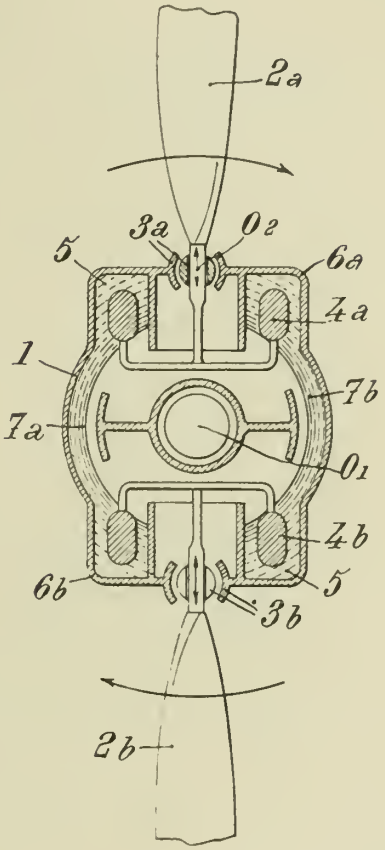


INVENTOR
PIETRO MARTINOTTI.

BY Bailey & Larson
ATTORNEYS

PUBLISHED
MAY 18, 1943.
BY A. P. C.

P. MARTINOTTI
AIRCRAFT PROPELLERS
Filed Oct. 17, 1939

Serial No.
299,879
3 Sheets-Sheet 3

Fig. 7.

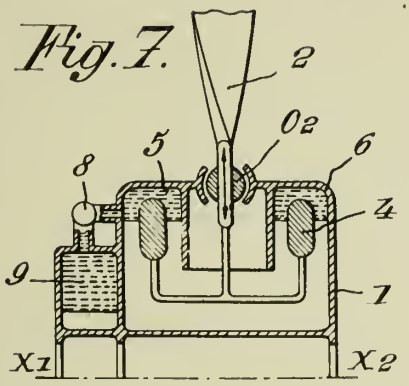


Fig. 8

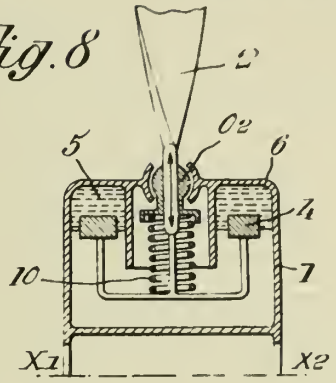


Fig. 9.

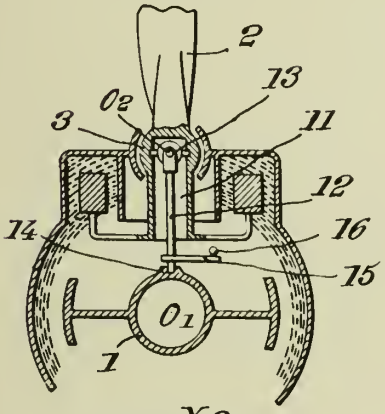


Fig. 10.

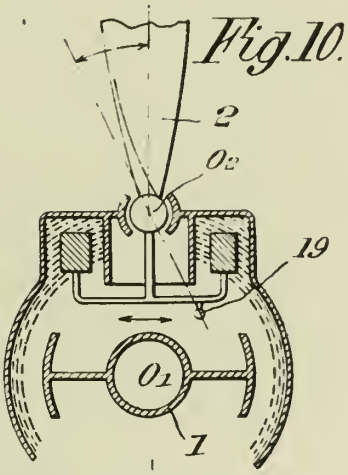


Fig. 9a

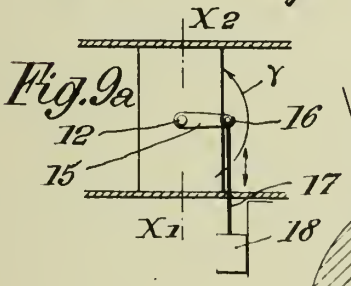


Fig. 10a

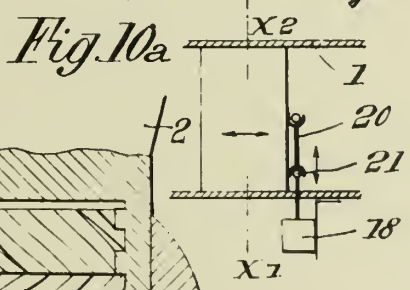


Fig. 11.

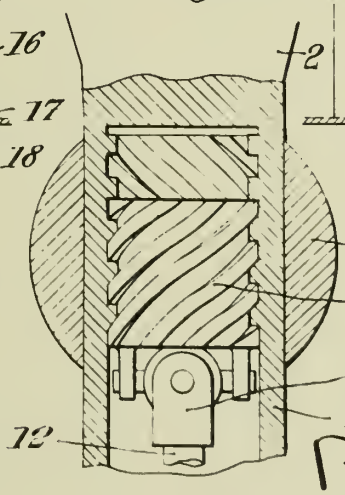


INVENTOR
PIETRO MARTINOTTI,

BY

ATTORNEYS

Published May 18, 1943 Serial No. 299,951

# ALIEN PROPERTY CUSTODIAN

## PRODUCTION OF HIGH IMPULSES OF ENERGY

Heinrich List, Berlin-Kladow, Germany; vested in the Alien Property Custodian

Application filed October 18, 1939

This invention relates to a device for producing extremely high impulses of electrical energy of very short duration for welding purposes.

The invention substantially consists in means for converting the mechanical energy stored in rotating masses into extremely high impulses of electrical energy by way of magnetic induction in a very short time with the aid of medium and high frequency generators of electric current, the excitation of the field of the generator being simultaneously increased to a very considerable extent while the number of revolutions of the rotating masses and the excitation of the field can be controlled by suitable means. Another feature consists in means for limiting the controllable current used to excite the generator in its duration by time switches or the like.

Other features of the invention will appear from the following description.

It is well known that in the case of sudden high impulses of load, such as are experienced for example in rolling mills, in welding, and so forth, part of the necessary impulse of energy can be obtained from rotating masses associated and operated with a generator. It is also known that in welding light metals, e. g. aluminium or the like, the welding process must be completed within a very short period of time in order to prevent the structure of the material from being unduly changed. In such devices, however, various defects have until now always been present, for example in welding aluminium the surface connection was weak, and for solving various though related problems it was always necessary to provide appropriate devices to suit the particular conditions. These devices were more or less bulky and cumbersome.

These defects are removed by the present invention, which has for its object to provide a method of and a simple handy apparatus for producing controllable impulses of electrical energy of a more or less short duration for various purposes generally, e. g. for the electrical resistance welding of light metals, aluminium, copper and the like, for producing extremely high temperatures for chemical processes, and so forth.

The main difficulty in this respect was that when standard generators were utilized the cross sectional area of iron at disposal and the magnetic field saturation put a limit to the energy impulse which could be obtained.

According to the invention, increase of the frequency of the change of polarity in the field is utilized for increasing the value of energy which can be transmitted in unit time. If, for example, in an alternating current generator a given total field flux from rotor to stator and back is obtainable, then at every change of polarity an electric energy impulse is induced, the magnitude whereof corresponds to the magnitude of the total field flux. By increasing the number of revolutions of the rotor or by increasing the number of poles the frequency of the field is changed and therewith the frequency of the induced alternating current is increased, so that the value of energy which can be transmitted in unit time is also increased. The invention makes use of these known means to increase, in the first place, the value of energy. Since, however, the high frequency machines hitherto utilized, as for instance in wireless telegraphy, do not yield particularly high impulses of energy when short circuit occurs on the generator side where the load is controlled, the exciting field of a middle or high frequency generator is provided according to the invention with an extremely high power-ampere-winding number, in order to counteract a reactance of generator winding. Such field exciter arrangements are easily provided even in the case of a very high number of poles. The various influences of electrical field losses can be counteracted by suitable construction.

In this invention under the term of medium and high frequencies ranging from above 300 cycles upward to 100,000 cycles per sec. are understood, while preferably 300 to 10,000 cycles per sec. are employed as the principal range.

If less than 300 cycles are used the transformer will become too big and too heavy, with more than 10,000 cycles the generator may become somewhat too large. For welding light metals cycles of 1,000 to 8,000 practically have been used with advantage.

The means so far described, which are known per se in various fields of electrical engineering, are combined with each other and with other known means for storing mechanical energy, for instance a flywheel, the mechanical energy stored in the flywheel being converted into electrical energy.

In some cases the flywheel may be disposed in the rotor of the generator and/or in the driving motor for said generator.

Furthermore, special consideration is given by the inventor to the reactance losses experienced in the transmission and utilization of such high frequency electrical energy impulses which losses cause a considerable reduction of tension (volt-

age) with the increase of frequency. For this reason, and in accordance with the principles of the invention, high frequency generators with the highest possible voltage and with correspondingly low amperage are employed. Reactance losses are then reduced by installing the forward and return leads in close proximity and also by subdividing individual leads into various branches as well as by avoiding locating the same near iron parts. If at the point of consumption, for instance in the case of resistance welding, particularly high intensity and small tension is required, a step-down transformer is used, the electrodes or other connections being directly attached to the ends of the secondary winding without the interposition of long leads, or the consumption resistances with large losses being disposed around the field core either as part or in place of the secondary winding.

Long leads between the electrodes and the transformer are not used. Therefore a double spot welding process with electrodes being located adjacent is used.

This combination of means known partly per se and previously used for other purposes also makes it possible to manipulate comparatively high output impulses easily by means of transformers, in which only very small quantities of iron and copper are used, so that the devices in question can be held and manipulated by hand. Thus, for example, spots of metal of great conductive capacity, such as aluminium, copper and the like, can be welded according to the double spot welding process, even if the materials are fairly thick, with the aid of a hand apparatus. The method of producing energy impulses, as described above, may be utilized, in addition to the fields of application already referred to, for producing very high temperatures for chemical and metallurgical processes and the like, since it is possible to generate thereby temperatures which could not be achieved with processes known thus far in the art.

For this special purpose the current for exciting the inductor can be limited in time by means of time switches, maximum current relays or other automatic devices, so that a certain amount of energy is converted in the shortest possible time ($\frac{1}{100}$ seconds or even less) and heat losses which may be occasioned by conduction or radiation may be restricted to a minimum.

In practice welding times of $\frac{1}{10}$ to $\frac{1}{100}$ sec. are used.

Furthermore, provision is made in the method for accurately dispensing the energy impulses, so that for any work intended to be done, accurately controlled energy impulses are available.

During welding the time of the flow of current may be maintained with great accuracy and this time is between 0.01 and 1 sec. Between successive current impulses there are interruptions of twofold until tenfold and more of the welding time.

In addition to such known means as automatic time switches, or maximum current relays in the active or supply circuit, the generator is also provided with controlling means according to the invention, so that the frequency and the secondary voltage can be varied.

The last mentioned controlling means according to the invention will be described later on in the example.

Furthermore the inertia of the rotating mass (the polar moment of inertia) in the rotor and the excitation of the alternating current generator are controlled by varying the intensity of the current and by switching on the exciting current for a limited time. One or more or all of these means may be utilized. It is to be mentioned at this point that the invention actually involves the feature of so grossly overloading the apparatus by excess super-excitation and current that if the current were maintained, the apparatus could conceivably be destroyed at once, but this result is, of course, avoided by the shortness and abruptness of the duration and cut-off of the excitation and current. In spite of utilizing high frequency in conjunction with a comparatively high flux saturation the heating of the machine parts will remain within tolerable limits because only loads of exceedingly short duration have to be considered. For this reason it is advantageous not to switch on the exciting current for the generator for long periods and to effect the dispensing of the current on the exciter side.

In the following an embodiment of the invention will be described by way of example with reference to the accompanying drawing.

Fig. 1 shows a device, installed according to the principles of the invention in diagrammatic representation.

Fig. 1*a* shows the short circuit switch in the generator circuit in detail.

Fig. 1*b* shows a side view of part of the generator.

Figs. 2 and 3 are diagrammatic representations of the transformers which form part of the device and are particularly adapted to form a small, handy double spot welding machine.

*a* is the driving motor which is energized from a source of current (for instance a threephase line schematically shown) and is coupled through the shaft *b*, mounted in bearings *e*, with the field magnet core *d* of the generator and an additional flywheel *f*. A clutch c may be provided. The magnet core *d* may be constructed for example in the form of a toothed rotor, the exciting winding thereon comprising individual poles or zigzag winding (meander band). The stator *g* has grooves of the same pitch as the rotor with a suitable generator winding *m*. The exciting current is supplied to the rotor *d* over the slip rings *h*, the brushes *i* and the interruptor *l* forming the source of current *k*.

The short circuit switch I may be constructed as shown in detail in Fig. 1*a*, this switch acts in the following manner.

The short circuit switch I is kept in the open position by means of a spring 2. When the key 3 has been pressed in the first place the greatest part of the current flows through the coil 4 serving for closing the switch. Due to a large regulable inductance 5 the switch 6 short circuits the coil 4 of the switch I with retardation and this switch interrupts the exciting current. By varying or regulating the inductance 5 the time of exciting the high frequency generator and therewith the time of the welding may be regulated in wide limits. Practically welding times of $\frac{1}{10}$ to $\frac{1}{100}$ sec. are used.

Obviously, other arrangements known in the construction of high frequency machines may be utilized, particularly such, wherein the exciting and generator arrangements are stationary, iron conductor members being moved between them for producing the change of field. The generator winding *x* is over-dimensioned, i. e. provided with a surplus ampere winding number to a very considerable extent and it is also made adjustable, so that the field excitation can be varied ac-

cording to the desired utilization of the energy impulses.

A certain continuous output of the generator is determined by the inner diameter and the length of the bundle of sheets of the stator, that is the output which can be obtained by the generator without being unduly heated. In order to obtain this output a certain output of the exciting field or a certain normal ampere winding number is necessary. When the generator is used during short periods only the upper limit of heating the generator is not to be taken into consideration and therefore the output of the generator can be greatly enhanced. In order to achieve this result a greater ampere winding number of the excitation is necessary, this means, with the same output of the excitation an increase of the exciting winding, namely over-dimensioning of the exciting winding.

As has already been indicated, the construction of the core and particularly the excess ampere turns of the winding on the generator are intentionally made so excessive that the only circumstance that prevents the generator from burning up at once because of the virtually gross overload of excitation and current involved is that the currents on short circuit, are of such extremely short duration and so abruptly cut off that currents which could effect such damage do not have time to build up the damaging high temperature nor any effect of melting down or burning the windings.

The induced high or medium frequency current flows through conductors *n* to a transformer, comprising a primary winding *o*, core *p* and secondary winding *q*. The transformed current is conducted to the electrodes *r*.

Obviously, the types and constructions of transformers are not exhausted by these examples and for special purposes specially designed and constructed transformers may be utilized to complete the device.

For the purposes of double spot welding two further constructions of attached transformers are illustrated in Figs. 2 and 3, these transformers being suitable for producing particularly low secondary tensions. In Fig. 2 the iron core *p* is divided into three parts 1, 2, 3 which have a common primary winding *o*. On the secondary side are disposed the individual loops *q'* which are connected in parallel and lead to the electrodes.

Each turn of the secondary winding only span ⅓ of the whole magnetic flux. Therefore each winding has only ⅓ of the tension compared with a winding which would span all the three cores.

Through this arrangement the potential or tension is reduced to one-third of the total amount.

In Fig. 3 the iron core is not divided up as a whole. The iron plates have apertures or slots *s* through which the secondary loops are passed. In these embodiments and according to the invention generally the electrodes directly attached to the secondary winding, or themselves form the secondary winding or part thereof, the construction being altered to suit conditions.

The secondary winding of the transformer may terminate in thick parts of copper which carry the electrodes by means of threads or by means of conical bores.

The invention is thus not restricted to the embodiments described. In particular, the flywheel may be disposed in the rotor itself, so that a separate flywheel *f* is omitted.

The flywheel may be associated in different manner to the generator; preferably the flywheel is connected by flanges to those parts of the rotor which carry the bundle of sheets of iron. With another embodiment of the invention the iron of the rotor itself may be dimensioned in such a manner that these parts form the flywheel.

HEINRICH LIST.

PUBLISHED
MAY 18, 1943.
BY A. P. C.

H. LIST

PRODUCTION OF HIGH IMPULSES OF ENERGY

Filed Oct. 18, 1939

Serial No.
299,951

Fig.1

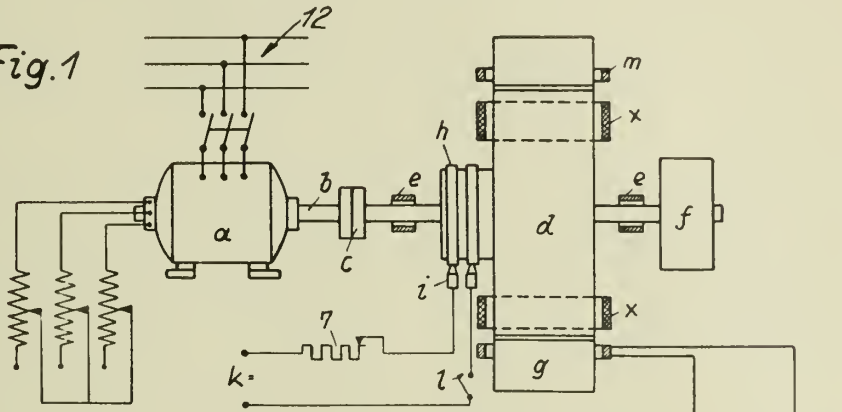


Fig.1a

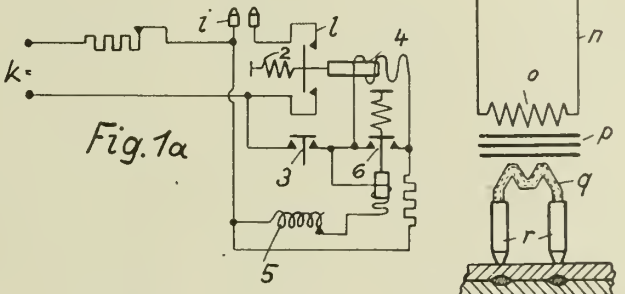


Fig.2

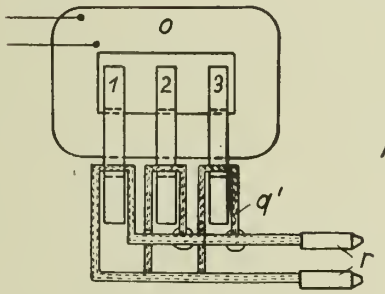


Fig.1b

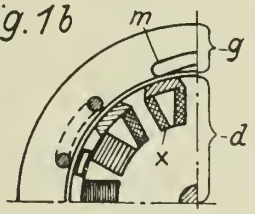


Fig.4

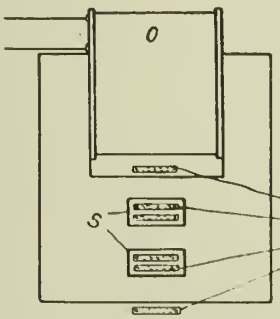


Fig.3

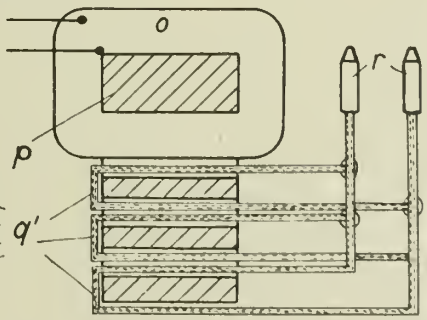


Inventor:
HEINRICH LIST
BY: Haseltine, Lake & Co.
Attorneys

Published May 18, 1943 Serial No. 300,334

# ALIEN PROPERTY CUSTODIAN

## ARRANGEMENT FOR ADJUSTING THE BLADES OF OPPOSITE ROTATING AIR PROPELLERS

Reinhold Freitag, Stuttgart-Untertuerkheim, Germany; vested in the Alien Property Custodian

Application filed October 20, 1939

The invention relates to an arrangement for adjusting the blades of opposite rotating air propellers and has the object to transfer the adjusting force starting from one place equally over both air propellers in such a manner that the blades may be adjusted dependent on each other.

In the problem to adjust the blades of opposite rotating air propellers dependent on each other, rises the difficulty that for supporting the adjusting forces a fixed point must be provided, which point must be situated between the two air propellers. Such a fixed point can be obtained in two manners: Either the adjusting elements mounted between the two air propellers are connected by a lever, containing at least one air propeller e. g. to the motor casing or the adjusting elements are mounted in the hollow inner air propeller shaft and the motion is transferred from there to the air propeller blade, in which manner also the possibility exists to support the adjusting forces in a fixed point e. g. the motor casing. The first-mentioned executing possibility has the disadvantage that an arm, at least containing one air propeller, must be provided decreasing the efficiency of the air propeller and moreover needs a complicated and circumstantial construction. The second possibility has the disadvantage that the hollow air propeller shaft can no longer be used for shooting through it, which is necessary for the driving of a modern military air craft.

The present invention shows the possibility how to adjust the opposite rotating air propellers, without providing the hollow shaft with disturbing constructions built into it or without the necessity of applying a particular lever surrounding the air propeller. Between the two air propellers there is mounted here an artificially created fixed point, upon which the adjusting forces transferred from one air propeller to the other may bear in such a manner that the blades of the two air propellers are adjustable dependent on each other. For this purpose each air propeller is provided with a gear ring engaging radially one or more gear wheels, the axles of which lay stationary in the space by the opposite rotation of the gear rings. These axles support the other transferring elements for adjusting the blades of both air propellers. In order to maintain the hollow shaft free from organs built into it, the whole adjusting mechanism is mounted outside the two hollow air propeller shafts situated concentrically with respect to each other and between the opposite rotating propellers and is surrounded by a casing containing also the organs for lubricating. A conveying arrangement is here connected to one of the gear wheels transferring the adjusting force, which conveying arrangement guides the lubricating oil from a receptacle to all the places to be lubricated of the adjusting arrangement mounted between both air propellers. The air propeller blade may be adjusted either by hand or automatically, dependent on any of the working factors.

The drawing shows a diagrammatical form of execution according to the invention. Fig. 1 shows a sectional view through the line ABC of the whole driving arrangement of the opposite rotating air propellers and Fig. 2 a section through the line DE through the boss of the air propeller.

The two hollow shafts 2, 3 are driven through gear wheels 4, 5 respectively 6, 7, 8 by the motor shaft 1. The transferring gear wheel 7 engaging the gear wheels 6 and 8 serves to invert the direction of the motion of the shaft 2 with respect to the shaft 3.

The whole arrangement is surrounded by the casing 9 surrounding moreover partly the adjusting gear 10. The gear ring 12 of this adjusting gear wheel 10 engages a gear wheel 11, which receives the impulse for changing the adjusting angle of the air propeller blade from an adjusting apparatus (not shown) and transfers this impulse.

The two air propellers 13 respectively 14 are mounted for instance not rotatably upon the hollow shafts 2 and 3. The blades are mounted rotatably in divided bosses 15 and 16. These bosses 15 and 15 bear gear rings 15' and 16', cast together with these bosses, which gear rings mesh with a number of transferring gear wheels 24.

The transferring gear wheels 24 are rotatable perpendicular to the main axle of the air propellers about the shafts 28, bearing the adjusting gear wheels 21 resp. 22. The shafts 23 are supported with one end in the casing 27 and with the other end in a ring 32 surrounding the hollow shaft 3 and adapted to slip over the same shaft. The adjusting gear wheels 21 engage the transferring gear wheels 25, 26 of which the radial toothing mesh with the gear wheels 18, 19 of the blade adjusting arrangement.

As appears from Fig. 2, the gear wheels 18, 17 are connected by a common shaft 34 bearing a worm 33 engaging a worm wheel 35. This worm wheel 35 is directly fixed to the shaft 36 of the air propeller blade 13. The adjustment of all the air propller blades takes place in the same man-

ner for instance that of the air propeller 14 through the gear wheels 19.

The casing 27 receives in its lower part the lubrication liquid 28, which is pressed through the borings 29, 30 into the hollow shafts 20 by the conveying arrangement 23 connected to the gear wheel 22.

The bearing ring 32 is at its lower part provided with a recess 31, through which the oil coming from the conveying arrangement 23 is transported to all lubrication places.

The arrangement acts in the following manner:

By the opposite rotation of the gear rings 15', 16' connected to the air propellers 13, 14 the transferring gear wheels 24 are rotated, maintain nevertheless their position in the space, in which manner a fixed point is created, by which the adjusting forces may be supported when changing the blade-adjustment. The impulse given by the adjusting wheels 10, 11 is transferred by the gear wheels 17, shafts 34, worm 33 and worm wheel 35 to the blade of the air propeller 13. The gear wheels 18 further connected to the shafts 34 transfer this impulse through transferring wheels 25, 21 respectively 22 and 26 to the gear wheels 19 of the air propeller 14, also provided with worms and worm wheels for adjusting the blades.

The number of blades of the two air propellers 13, 14 is without any importance for the invention. Moreover more than two air propellers, the one behind the other, may be applied and finally the adjustment of the blade may take place by hand or automatically.

In proportion to the number of blades to be adjusted only one transferring gear wheel and one fixed shaft or more transferring gear wheels and more fixed shafts may be applied.

REINHOLD FREITAG.

PUBLISHED
MAY 18, 1943.
BY A. P. C.

R. FREITAG
ARRANGEMENT FOR ADJUSTING THE BLADES OF OPPOSITE ROTATING AIR PROPELLERS
Filed Oct. 20, 1939

Serial No.
300,334

Fig. 1.

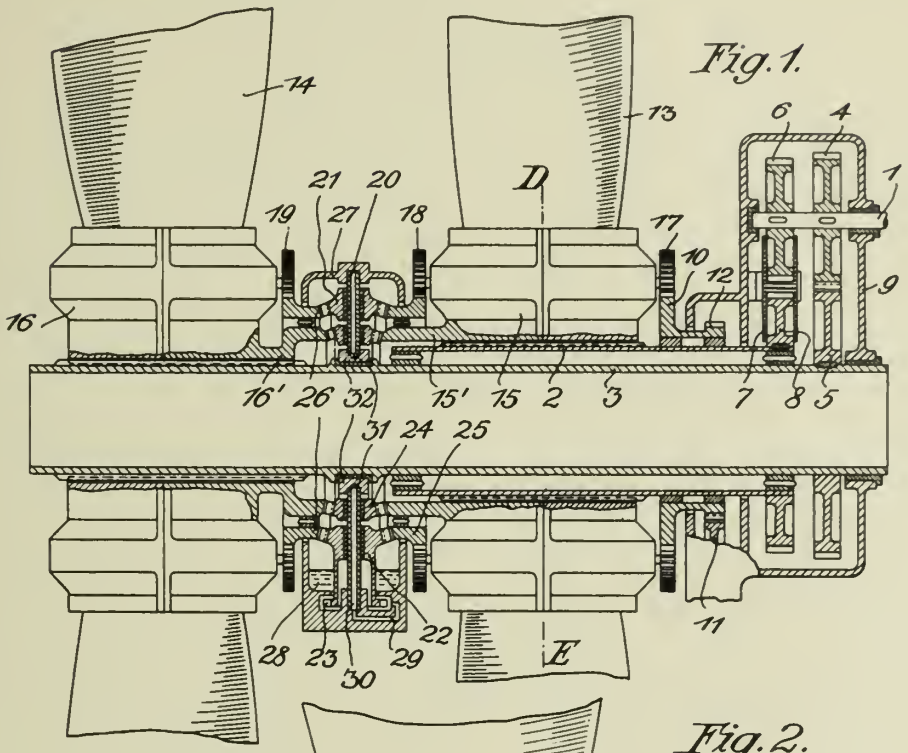


Fig. 2.

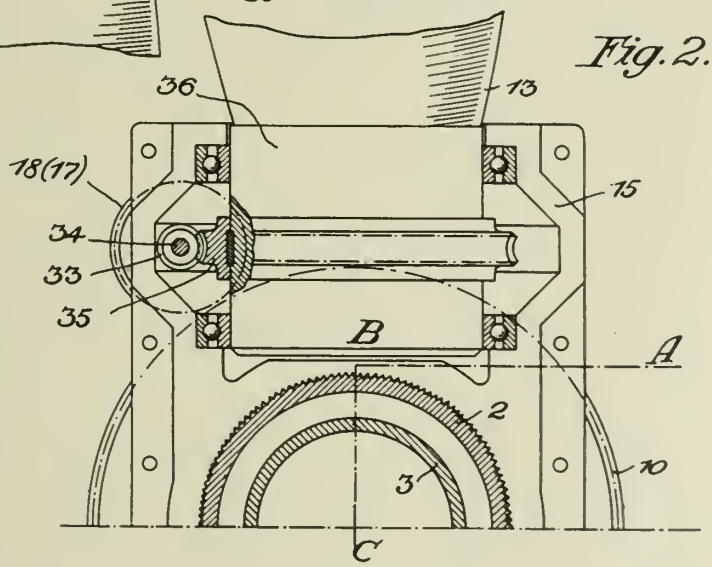


Reinhold Freitag
INVENTOR
BY Otto Hyman
his ATTORNEY.

Published May 18, 1943 Serial No. 301,295

# ALIEN PROPERTY CUSTODIAN

## PROCESSES FOR INCREASING THE EFFECTIVE OUTPUT OF PROPELLERS, OF AEROMOTORS, ETC.

Max Rendelstein, Brussels, Belgium; vested in the Alien Property Custodian

Application filed October 25, 1939

This invention relates to a process purposing to increase the effective output of the propellers, aeromotors, and of similar rotating devices. It is known that the effective output of such devices is based on the resistance offered by the fluid in which the device under consideration functions. Starting from the ascertainment of the fact that the effective output can be increased with the density of the medium, the process according to the invention consists essentially in that one produces short, successive current interruptions in the current of the fluid bathing a rotative device, thereby creating compressions and dilatations of the fluid on all sides of the device.

In the following description, for simplicity's sake, one will suppose that it is question of a bladed screw or propeller revolving in the air, but the invention is applicable to any rotative device revolving in any fluid medium whatever.

The process according to the invention will be described with reference to the annexed drawing which represents some devices, given as non-limitative examples, for the realization of the process. On the drawing,

Fig. 1 shows a vertical section of a device, and

Fig. 2 shows it in transversal section following the broken line II—II of Fig. 1.

Fig. 3 shows schematically another form of embodiment of the device, and

Fig. 4 shows a front view of a perforated disc which forms part thereof.

Fig. 5 shows the invention applied to an aeroplane.

According to Figs. 1 and 2, a bladed screw or propeller 4 is keyed-on the shaft 5 which is operated by means of the pulley 6 and of the belt 7. A cellular wheel 10 is provided on either side of the propeller, consisting of a rim I and of the radial partitions 2 which start at the hub 3 and divide the wheel in compartments 9. Instead of the partitions 2, tubular sections may be disposed parallel to the axis of the wheel, these sections, open at their extremities, have a length equal to the width of the wheel and delimiting the cells. The cellular wheels are fixed on a base 8 and their hubs act as bearings for the shaft 5. The propeller 4 owing to its revolutions produces a current of air in the direction of the arrow P. Owing to the presence of the cellular wheels on either side of the propeller 4, this current of air is interrupted at very frequent intervals, this creates pulsations in the cells 9, that is to say, compressions behind the propeller 4 and dilatations in front of the propeller; these pulsations which are short-lived, follow one another continually the result being an increase of the effective output of the propeller, by causing it to act on a medium the density of which has been increased.

The width of the propeller blades, or the depth of the cells is advantageously regulated, and for this purpose each cellular wheel can, for instance, be made of two similar parts which telescope one in the other in a radial direction, which allows the optimum depth of the cells to be determined in each case.

The effective output of the disposition according to the invention being attributable principally to the part played by the cellular wheel in which the compressions are produced, it has been ascertained that a notable increase of the usual propeller's output is obtained even in the absence of the cellular wheel in which the dilations are produced. This latter wheel may therefore be omitted without prejudice to the scope of the invention.

A further example of embodiment of the invention is schematically shown in Fig. 3. A ventilator 17 exhausts the air of chamber 13 by means of a conduit 15 in the direction of the arrow R, and delivers it, always in the direction of the arrow R, through the conduit 16 in the chamber 14. Before the open terminal face of each of the chambers 13 and 14 a pair of cellular wheels 10 are provided, fixed on a base 8. Supported by the shaft 5, a disc 11 provided with windows 12 (Fig. 4) revolves between the wheels 10 of each pair. The shaft 5 is mounted, for instance, in the hubs 3 of the cellular wheels, and is operated by means of a pulley 6 and of a belt 7. Owing to the rotation of the discs 11, the current of air circulating as shown by the arrows R is periodically interrupted which gives rise to a rapid succession of compressions and dilatations in the current of air. The device represented may serve, for instance, as a compressor, or as a blast, and allows notably, large masses of air to be delivered with a reduced consumption of power.

The propellers, aeromotors, etc., actually known derive their efficacity from the resistance which an air mass opposes to its being itself set in motion. The effective output is determined by the quantity of air which comes in direct contact with the surface which sets this air in motion, and by the speed $v$ which the surface in motion imparts to it. If F is the surface of the blades which set the air in motion, one has

$$W = k.\rho.F.v^2$$

where W designates the power which must act on a volume of air F.$v$ in the time unit, to impart to it the speed $v$. As the total surface of the blades of a propeller is smaller than the surface of the circle described by the blades, the power of traction, for instance in the traction propellers, necessarily remains smaller than the power required to communicate the speed $v$ to the air mass crossing the whole of the circular surface.

It is only the mass of air in direct contact with

the surface of the blades which produces an effect. According to the invention, one creates, in the current of air, successive compressions and dilatations which transmit themselves in opposite directions starting from the spot where they are produced, with the speed of sound. In the application of the invention to aeromotors, with a view to a better utilization of the power of the wind, the revolutions of the wheel of the aeromotor must be brought up to an appropriate speed, this may demand the employment of additional power. In the case of a propeller driven by a motor, the traction power is equal to the power required to impart the speed $v$ to an air mass 2. 330 F. The air resistance being, in this latter case, designated by $W_2$, one has

$$W_2 : W = 330 : v$$

The efficacity of the process according to the invention is based on the following considerations: One will suppose, in a long tube of section F, a mobile surface which occupies exactly the section of the tube, so that when the surface displaces itself, the air cannot escape laterally. When the surface displaces itself at the speed $v$, the layers of air which are at a distance from the surface must progressively follow the same movement as it. A certain time is required $t$ for a layer of air separated from the surface F by the distance $l$ to take this motion. During this time, however, the surface F has described a path $t.v$, and consequently compressed a volume of air 1.F to the volume $(1-tv)F$. During this time, at the back of the surface in motion, a dilation of air is produced, the volume of air 1.F having dilated itself up to the volume $(1+tv)F$. The speed with which the surface movement imparts itself to the most distant air layers is equal to the speed of sound, and the resistance which the surface meets with is equal to the normal atmospheric pressure, at about $W_2=70.F.v$. kg. If the surface stops, the furthest air layers, situated on either side of the surface, will also stop progressively, and will resume their normal density, whilst their movement transmits itself to air layers which are further away.

If one designates the length of the tube by L and if one admits that the speed of sound is 330 m/sec., the above resistance will only exist during the time

$$t=\frac{L}{330}$$

(or

$$\frac{2L}{330}$$

taking into account the duration of the propagation before and behind the surface F.) from the start of the movement. If, after this period of time, the surface continues to displace itself whereas the air coming out of the tube can escape in all directions, the change of density weakens continually and ceases completely, as does also the propagation. As a matter of fact, the compression and the dilation described which propagate themselves with the speed of sound, only take place whilst the propagation does not leave the tube. Such variations of density which propagate themselves, can also produce themselves in the open air, if the weak duration of the movement is comparable to that of the sound oscillations. If the length L of the tube is so small that the time

$$t=\frac{L}{330}$$

is near to the duration of an oscillation of a sound emitter, the compressions and dilatations caused in the tube by the movement of the surface during the time $t$ will yet propagate themselves, at the speed of sound, in the open air after having left the tube, whilst that in the tube the air goes back to a state of rest, when after a time

$$t=\frac{2L}{330}$$

the movement of the surface has ceased. The resistance met by the surface during the time $t$ is again equal to $W_2=70.F.v$ kg.

The speed of the revolutions of the propeller 4 or of the disc 11 is determined in such a manner that the duration of the interruptions caused by these devices will be as near as possible the duration of the sound oscillations. It is sufficient if one has $\leqslant \frac{1}{2000}$ sec., which is obtained all the easier when the peripheric speed of the revolution of the propeller 4 or of the discs 11 is nearer to the speed of sound.

However, for reasons of practical realization, one may choose $U=k.330$, with $k<1$, U being the effective peripheric speed.

The following relations:

$$W_2=70.F.v$$

$$t=\frac{L}{330}\leqq\frac{1}{2000}$$

$$U=k.330$$

allow one to determine, in each case considered, the power, and the effective output, as well as the dimensions of the propeller or of the disc, the number of blades, the width and the pitch of the blades, the number of cells, etc.

The number of blades of the propeller 4 depends on the number of cells 9. The revolution speed being suitably determined, the blades produce on one face, an air rarefaction, and on the other face, an air compression, like the mobile surface in the above example.

If the number of revolutions of the propeller, the width of the blades and the number of cells 9 present a relation such that between the obturation of a cell by a blade and the reopening of the cell, the compression or the dilatation of the air in the cell has not had time to transmit itself to the exterior of the cell, that is to say, to come out of the cell, the effect is then identical with that of the example of the tube above given.

During the short time that the cell remains open, the movement of the air it contains communicates itself to the neighbouring air layers, whereas the air contained in the cell returns to its normal density.

The device according to the invention is applicable to propellers, in general specially to aeroplane propellers, to aeromotors, to the wheels of static parachutes, etc.

Fig. 5 shows schematically an application of the invention to an aeroplane of which the carrying surfaces are replaced by propellers according to Fig. 1. It will be understood that one or more such similar propellers can be utilised as driving propellers for aeroplanes.

MAX RENDELSTEIN.

PUBLISHED
MAY 18, 1943.
BY A. P. C.

M. RENDELSTEIN
PROCESSES FOR INCREASING THE EFFECTIVE OUTPUT OF PROPELLERS, OF AEROMOTORS, ETC.
Filed Oct. 25, 1939

Serial No.
301,295

Fig 1

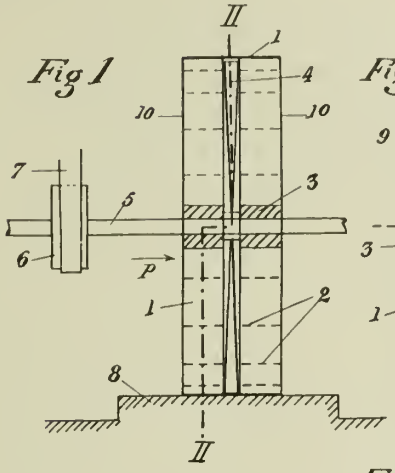


Fig 2

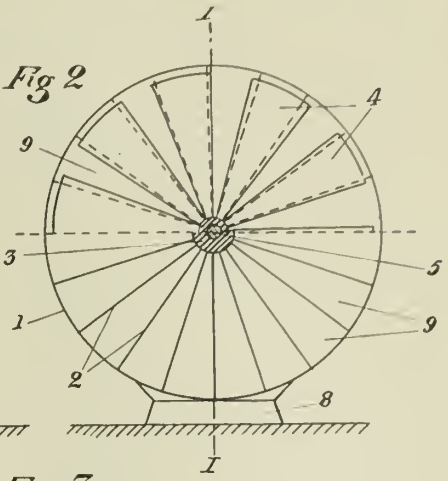


Fig. 3

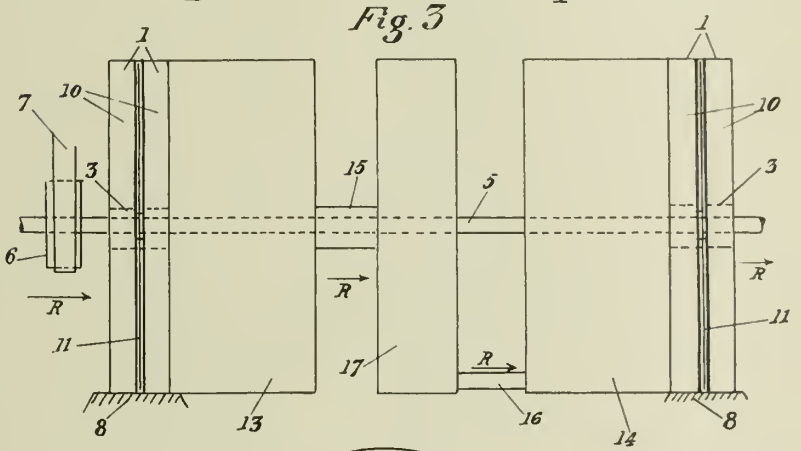


Fig. 4

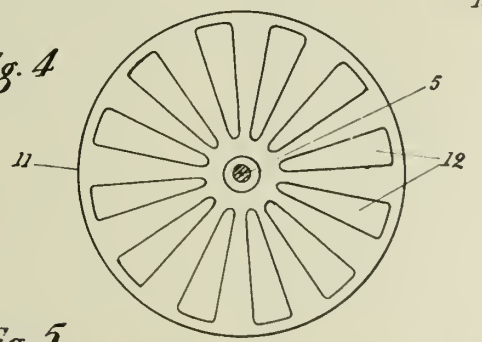


Fig. 5

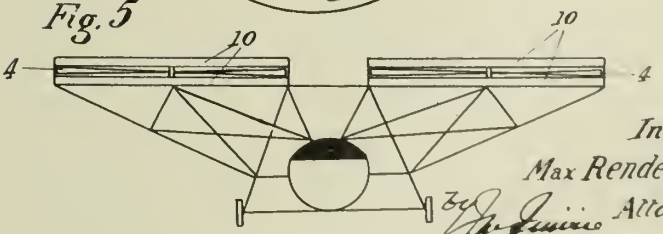


Inventor:
Max Rendelstein
By J. P. Jones Attorney:

Published May 18, 1943 Serial No. 302,054

# ALIEN PROPERTY CUSTODIAN

## METHOD OF PRODUCING PROTECTIVE LAYERS ON MAGNESIUM AND MAGNESIUM ALLOYS

Hugo Hüber, Mohringen/Filder, Paul Bauer, Stuttgart, and Otto Jaeh, Ludwigsburg, Germany; vested in the Alien Property Custodian

No Drawing. Application filed October 30, 1939

This invention relates to a method of producing protective layers on magnesium and magnesium alloys.

It is already known to produce protective layers on magnesium or magnesium alloys by immersing the article to be protected in aqueous solutions of chromate. The protective coatings thus obtainable are very sensitive to mechanical injury, since normally by injury of the very thin protective layer a local corrosion of the metallic work piece is started which is stronger than that occurring if the article would have been used without a protective layer obtained by corrosion. Stronger coatings, of course, can also be obtained by anodic treatment of the magnesium or its alloys in solutions of chromic acid. It was found out, however, that it is diffieult to wash out the electrolyte absorbed in the oxide coating. On the other hand, residues of the electrolyte left in the protective coating obtained by corrosion may cause indirectly severe undesirable corrosions of the work piece in its use. The same drawbacks occur with protective coatings produced by immersing the work piece into molten salts, since also in this case the partly oxidized metal salts can never be perfectly removed again from the protective coating.

The present invention relates to a method for the production of protective coatings on articles consisting substantially of magnesium, such as magnesium and magnesium alloys, in which the protective layers are produced with the aid of bifluorhydric or bi-hydrofluoric acids or its salts. Suitable acids of this kind are the silicofluoric or fluosilicic acid $SiF_6H_2$, the borofluoric acid $BF_4H$, the titanofluoric acid $TiF_6H_2$ and similar acids of this groups. As far as the corresponding metal salts are used in aqueous solution, at least the magnesium salts of these acids must be used, for example, $MgSiF_6$ or $MgTiF_6$ since the corresponding alkali salts would not produce a substantial or visible protective coating. The metal salts permit the production of coatings of an optimum quality. Where—when using salts of heavy metals—the corresponding heavy metal is also deposited, however, it can be easily removed from the protective coating lying thereunder, without detrimentally affecting the coating. Since some of the complex salts of the bifluoric acids are also sublimable, it is also possible to produce the protective layer on the article by sublimating. Especially magnesium silicofluorid $MgSiF_6$ is suitable for this purpose.

Some examples of practical processes for carrying out the invention will now be described in detail with respect to the salts of the silicofluoric acid $SiF_6H_2$ but we wish to make it quite clear that borofluoric acid salts or titanofluoric acid salts or mixtures of these substances may also be used for the production of protective layers.

Immersing a magnesium alloy known under the trade name electron into a concentrated aqueous solution of magnesium silicofluorid comprising 500 grams $MgSiF_6$ per 1 liter water, a fixedly adhering protective coating of light gray colour is formed on the metal. This protective coating offers already sufficient resistance against slighter corrosive attack and, moreover, forms an excellent base for varnish or lacquer. Cold varnish adheres better on this coating than on the corresponding coating obtained by chromic pickling. Moreover, while the known chromic pickling bath in case of combined work pieces comprising electron and, for instanee, steel rings pressed into said electron, causes a chemical attack with respect to the steel, so that the same must be protected against such attack by special measures, such proteetion is not necessary when the said combined work pieces are treated in accordance with my novel method. Nevertheless, the action of our novel pickling bath with respect to magnesium and its alloys is so intensive that even die-cast work pieces of electron can be provided with the proteetive coating without any preliminary treatment, while the casting skin has to be removed from the work piece in order to produce thereon a coating by one of the conventional chromic pickles.

We have found that it is advantageous to immerse the metal artiele treated after my novel process into an alkaline solution, for example, lime water, after it has been taken out of the pickling bath, so as to neutralize or destroy any excessive $MgSiF_6$ still adhering to the article, unless the following after-treatment is used.

The protective coatings obtained by the action of concentrated aqueous magnesium silicofluorid on magnesium and its alloys can be rendered denser and more resistive in a mechanical respect by heating the metallic article treated in the pickling bath. In this case, the article is not washed off and not subsequently immersed in an alkaline solution. Advantageously, temperatures above 100° C up to a temperature somewhat under the softening temperature of the respective metal are applied. A temperature of 390° C. proved to be particularly suitable.

The whitish gray layer obtained by the said modification of the process according to the invention has optimum anticorrosive properties without any further treatment. First of all, however, it is more resistant mechanically. By reason of its greater thickness it is more suitable for the reception of impregnating substances than thinner protective layers. Thus, comparative tests between electron pickled by chromate and electron pickled in accordance with the invention have shown that our novel protective layer has a durability increased by 100 percent com-

pared to the electron pickled by chromate, in case of a similar varnish coating.

We have found that a still greater density and reinforcement of the protective layer can be obtained by a repeated immersion treatment and subsequent heating.

The protective layer produced by our novel aqueous bath may be dyed, as the protective layer is being formed, by metallic compounds admixed additionally to the bath. For example, by the addition of potassium permanganate $KMnO_4$ a protective layer of a deep-black colour and by an addition of chromate e. g. $Na_2CrO_4$ a protective layer of a dark-gray colour can be obtained so that this colour is imparted to the metallic article proper. The work pieces so treated may be used for novel purposes.

A protective coating having a deep-black colour can be obtained on magnesium alloys, sheets of which are known on the market as "AZM" sheets, by immersing the article into a bath comprising:

| | | |
|---|---|---|
| Water | liters | 1 |
| $MgSiF_6$ | grams | 250 |
| $KMnO_4$ | do | 30 |
| $H_1SiF_6$ of a density of 1,3 | cubic centimeters | 150 |

The black coating obtained by said bath is also suitable as a base or ground layer for lacquer or varnish. Where the coating is oiled, instead of being varnished, its decorative effect and, moreover, its imperviousness to corrosion can be increased.

Reinforcement of the coating and making it denser is also possible with this blackening bath, by a repeated treatment of the metallic article.

The fact that the salts of the bi-fluorhydric acids are sublimable, this sublimation being possibly accompanied by a more or less intensive thermal decomposition, also offers the possibility of applying our novel process already in the casting operation of the magnesium and its alloys. In this case, the salts may be admixed to the moist sand or applied to the finished sand mould in the form of powder.

It is also possible to apply our novel protective coating on metal articles of magnesium and its alloys in an electrolytic process in which the work piece forms the cathode. Where a solution of magnesium silico-fluoride is used as an electrolyte, magnesium hydroxide is primarily produced on the cathode in the electrolytic operation which magnesium hydroxide is transformed into magnesium fluoride and silicic acid and forms a very dense layer on the cathode adhering very tightly thereto. In this manner it is also possible to obtain subsequently cathodically a greater density of the coatings obtained by our novel process in the above described manner.

The coatings produced by the metal salts of the bi-fluorhydric acids are generally more important than the protective layers obtained by action of the respective acid itself, except the coatings obtained by a cathodic treatment. Also, the acids proper are not suitable for the production of protective layers by sublimation.

The coatings produced in accordance with the invention form protective layers of relatively high imperviousness to corrosion, even if they are relatively thin, and the said imperviousness to corrosion can be increased to an optimum value by reinforcement and making denser of the coatings unless the maximum imperviousness is already present immediately by the production of the coating by the cathodic method or by sublimation. In the reinforced form the coatings show a high resistance in use against mechanical injury and that without an additional coating of varnish or the like being required, although the resistance against mechanical injury can be increased by oiling, lacquering, varnishing and the like. The coatings made in accordance with the invention show a great adhesion on the metal articles on which they are produced so that it is possible to deform the articles in cold condition after the production of the coating.

The method of the present invention has been described in detail with reference to specific embodiments. It is to be understood, however, that the invention is not limited by such specific reference but is broader in scope and capable of other embodiments than those specifically described.

HUGO HÜBER.
PAUL BAUER.
OTTO JAUCH.

Published May 18, 1943 Serial No. 302,870

# ALIEN PROPERTY CUSTODIAN

## MULTIPLE MOTOR DRIVING MECHANISM FOR AIR CRAFT WITH ADJUSTABLE PROPELLER

Fritz Nallinger, Stuttgart, and Albert Friedrich, Stuttgart-Bad Cannstatt, Germany; vested in the Alien Property Custodian

Application filed November 4, 1939

The invention relates to a multiple motor driving mechanism particularly for air crafts with one or with more adjustable air propellers, whereby the motors drive a common shaft, and consists therein that as well the adjustable air propellers as also the adjusting controller and the adjusting gear are driven by the common driving mechanism of the multiple motor driving mechanism, in such a manner that when one or more motors fall out e. g. stop, the said elements are driven still by the other rotating motors. In an advantageous manner the driving of the adjusting controller and of the adjusting gear is derivated from the air propeller shaft itself, driven by all of the motors commonly and the adjustment of the air propeller blades takes place by a shaft acting upon the adjusting gear, which shaft is mounted within the hollow air propeller shaft. The control of the adjusting gear driving shaft takes place over a power- or revolution controller being mounted between the driving mechanism at the air propeller shaft and the driving mechanism at the driving shaft of the adjusting gear. Other features of the invention will appear from the following description of two forms of execution according to the invention shown in the drawing.

The drawing shows in Fig. 1 an arrangement with the driving of the control gear over a screw connection, and

Fig. 2 shows a pneumatically actuated adjusting gear.

Two motors 1 and 2 drive each by means of a claw clutch 3 and 4 and a gear mechanism 5, 6, 7 commonly the air propeller shaft 8. On this air propeller shaft are fixed in the shown form of execution two adjustable blades 9 and 10, rotating about the shafts 11 and 12 and adapted to be adjusted by rods 13 and 14. These rods 13, 14 are connected to a T-piece 15, slidable in length direction in the air propeller nave 16. The end 15*a* of the shaft of the T-piece 15 is provided with an outer screw thread and by means of this screw thread engaging the inner screw thread of the length boring in the end of a shaft 17, the latter is connected with said rod. The shaft 17 is rotatably situated within the hollow air propeller shaft 8.

The other, free end of the shaft 17 extends rearwardly beyond the air propeller shaft 8 and is there provided with a gear wheel 18. This gear wheel engages a driving tooth wheel 19 of a power- or revolution controller 20, driven via a tooth wheel 21 and the tooth wheel 22 fixed upon the air propeller shaft 8.

The arrangement acts in the following manner:

The rotation of the air propeller shaft 8 commonly driven by the motors 1, 2 is transferred by the gear wheels 22, 21, 19 and 18 to the adjusting shaft 17 and the shaft 17 rotates under the influence of the controller 20, when the control action exerted is constant, with the same speed as the shaft 8. In proportion to the increase or decrease of the number of revolutions of the shaft, the influence of the controller 20 acts in such a manner that the latter changes the adjusting angle between the driving shaft 17 of the adjusting gear and the air propeller shaft 8 by means of the gear wheel 19, when under the influence of the screw thread guiding 15*a* an axial adjustment of the T-piece 15 and of the propeller blade will take place. The controller acts thereby in such manner that when the number of revolutions of the air propeller shaft is decreased or when the driving power decreases, the air propeller blades are readjusted in a plane or reverse.

The execution of the adjusting gear and of the adjusting device as well as of the controller may be executed within the frame of the invention in any suitable way. It is possible in this manner to apply a mechanically, hydraulically, pneumatically or electrically acting controller. The adjusting gear may also consist in a mechanical gear known in itself, or it is possible to provide an electrical, hydraulic or pneumatic device. This is also the case with the common driving gear 3—7.

In Fig. 2 of the drawing a pneumatical or hydraulic driving gear for the adjusting gear is shown, whereby the shaft of the T-piece 15 is actuated by a piston 23, the latter being actuated by a pressure fluid. The circulation of the pressure fluid is controlled by a controller 20, driven by means of the tooth wheels 19, 18 by a pump 24.

The invention is also applicable to adjustable propellers rotating in opposite direction.

FRITZ NALLINGER.
ALBERT FRIEDRICH.

PUBLISHED

MAY 18, 1943.

BY A. P. C.

F. NALLINGER ET AL

MULTIPLE MOTOR DRIVING MECHANISM FOR AIR CRAFT WITH ADJUSTABLE PROPELLER

Filed Nov. 4, 1939

Serial No. 302,870

Fig. 1.

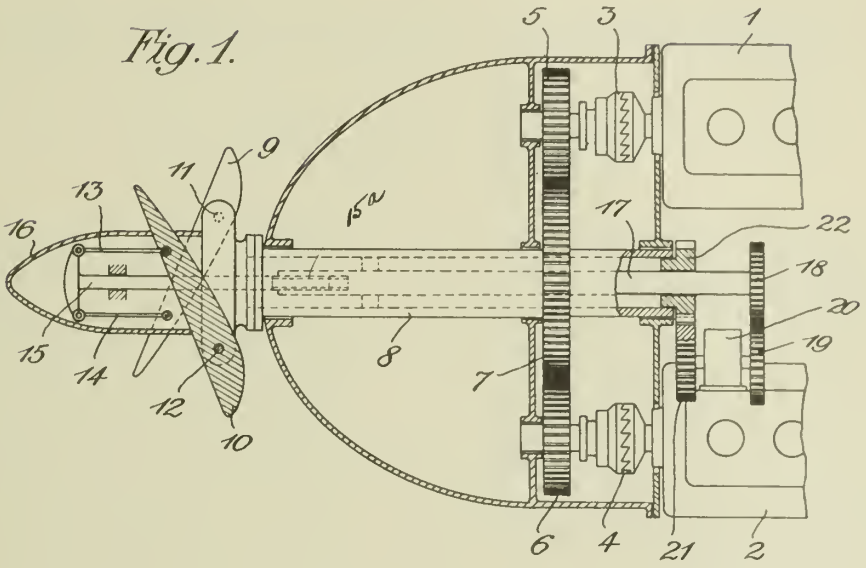


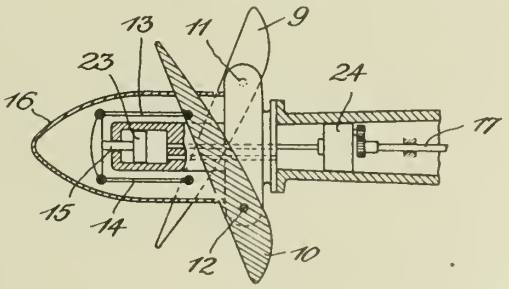


Fig. 2.

Fritz Nallinger
Albert Friedrich
INVENTORS

BY

ATTORNEY

Published May 18, 1943

Serial No. 303,336

# ALIEN PROPERTY CUSTODIAN

## POLYMERIZING APPARATUS

Theodor Rummel, Berlin-Charlottenburg 9, Germany; vested in the Alien Property Custodian

Application filed November 7, 1939

The present invention relates to improvements in apparatus for polymerizing oils by means of electric discharges.

In the methods used prior to this invention for polymerizing oils by means of glow discharges, apparatus have been used in which insulating elements have been placed in the discharge path for stabilizing the discharge. To this end, plates of glass or organic insulating materials have been used, the thickness of which could not be made less than 1 mm if arcing and puncturing of the insulating material was to be avoided. The tension used in the known apparatus generally amounted to 4000–8000 volts or more at 500 periods per second. In larger apparatus, the insulating plates have usually not been made of glass but of presspahn. However, this material easily warps in continued use and the water content thereof also leads often to disturbances in the operation. Furthermore, presspahn being an organic substance, it can easily be burnt by arcing.

It is the object of the present invention to overcome the disadvantages of the insulating plates according to the prior art and to provide in place thereof layers of oxide of a thickness below 0.4 mm, and preferably of a thickness of approximately 0.05 mm. It has been found that, although the stabilizing voltage, that is, the voltage drop in the layer, is only very small, the stabilization is amply sufficient. For attaining this purpose, the stabilizing layers may preferably be obtained by layers which are formed electrolytically on light alloys. However, similar effective layers may also be formed by chemical methods. The stabilizing action of the oxide layers is principally based upon their quality to act as condensers.

Another advantage of the invention is the fact that no intermediate layers are required which may warp or distort during the operation. Furthermore, the present invention makes it possible to operate at a tension of 360 to 2000 volts, that is, at a much lower tension than that previously required.

The accompanying drawing illustrates diagrammatically one embodiment of the present invention.

Referring to the drawing, the plates preferably consist of aluminum or other light metals and are oxidized electrolytically. The plates are preferably spaced from one another from 1 to 15 mm. The operating temperature may be lower than 100° C. and the pressure may be less than 100 mm and generally 1 to 25 mm mercury column. The current density may be 3–4 times as high as the current density of the known devices. The results have proved to be very satisfactory. The construction of an apparatus according to the invention is also considerably less complicated than the construction of apparatus of the known type.

Whereas the insulating layers previously applied were easily subject to severe aging and deterioration, the stabilizing layers according to the invention are free therefrom. If desired, the layers may be protected by condensation products of phenol or polymerisation products of styrol. However, the edges of the plates are to be protected in all cases against coronas by covering the same with suitable insulating materials.

The oil obtained by the present invention is of excellent quality. The relatively low tension as compared with the known processes also causes a reduction of the cost of the electrical energy required.

THEODOR RUMMEL.

PUBLISHED
MAY 18, 1943.
BY A. P. C.

T. RUMMEL
POLYMERIZING APPARATUS
Filed Nov. 7, 1939

Serial No.
303,336

Fig. 1.

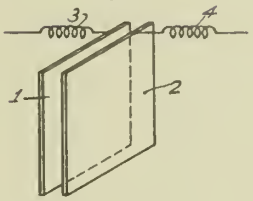


Fig. 2.

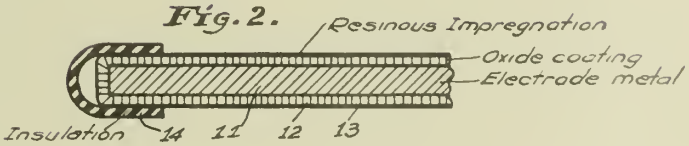


Theodor Rummel
Inventor
by Dwight
Atty.

Published May 18, 1943 Serial No. 303,551

# ALIEN PROPERTY CUSTODIAN

## GEARING FOR AIRCRAFTS FLYING IN LARGE ALTITUDES

Fritz Gosslau, Berlin-Charlottenburg, Germany; vested in the Alien Property Custodian

Application filed November 9, 1939

The present invention relates to a gearing for aircrafts flying in high altitudes. The motor of this gearing is connected to a charger mechanically driven by the crank shaft with unchangeable gear ratio. Eventually, the air propeller of this gearing is provided with adjustable blades.

Motors for aircrafts flying in high altitudes are so designed that the charging temperature near the ground just prevents knocking phenomena in the cylinders. In connection with the modern kind of drive of the centrifugal charger equal pressures have been obtained in the best possible case in heights up to about 5 km., because a charger designed on the basis of a ground temperature of +15° C. supplies in such heights a charging temperature of about 100° C., i. e. a temperature which only just prevents knocking of the motor.

If, however, larger heights of flight were to be obtained, a change gear was inserted between the crank shaft and the charger so that it was possible to run the charger on the ground with slower speed and in a certain altitude with faster speed. Such gearing, however, are of large weight and the clutches are not always reliable at the large outputs and numbers of revolutions so that other ways for effecting control of the charger were searched for.

To allow a stepless increase of the number of revolutions of the charger in a view to improve the above mentioned arrangement, auxiliary motors, power transmissions by the use of liquid systems or other similar means were used. However, such additional operating elements for controlling the number of revolutions of the charger also result in a substantial increase of the weight of the gearing or an endangering of the security of service in want of sufficient reliability.

Another attempt to drive a charger by means of a waste gas turbine has not generally been introduced due to the large thermical and mechanical deficiencies of such a plant.

In connection with aircraft motors supplied with a compressed charge by a charging pump driven by the motor itself it has, moreover, been proposed to maintain the charging temperature constant by influencing the running speed of the charging pump by means of a temperature feeler arranged in the charging pipe in such a manner that this feeler operates to reduce the pitch of a variable pitch propeller at decreasing charging temperature so that thereby the number of revolutions of the motor and that of the charging pump cooperating with the motor under a constant ratio of gearing is increased.

The control by means of a temperature feeler, however, has various serious drawbacks. For a reliable operation, in particular the reaction of a temperature feeler to the temperature of the surrounding air is far too slow if the feeler is built-in in the pipe carrying the charging air. Moreover, in this arrangement there is a single positive dependence of the number of revolutions of the motor on the height of flight only and this due to the far too slow reaction of the temperature feeler to the temperature of the surrounding air cannot come to action in good time, so that the motor is not protected against temporary overstressing. By the quantity of air passing through which changes with the height of flight the operating point in the field of distinctive lines of the charger is shifted so that besides the temperature of the atmosphere the efficiency of the charger and the conveyer height of the charger influence the charging temperature and thereby the number of revolutions in an uncontrollable degree.

Another drawback of influencing the variable pitch propeller by the temperature feeler consists in this that on throttling to a reduced output in any desired altitude the number of revolutions of the motor and the charging temperature are not decreased, as would be desirable, but remain unaltered high due to the fact that the temperature of the charging air is maintained constant by the regulator. High numbers of revolution, however, are accompanied by large losses of output and high temperatures of the charging air reduce the yield of output so that in comparison with normal service conditions the effective output decreases and the consumption of fuel increases.

The problem to provide an aircraft motor for flying in large altitudes as high as to the substratosphere is solved by the present invention by simple and reliable means responding or reacting immediately and by the particular arrangement of such means. The use of a charger, for instance a charger rigidly coupled to the crank shaft by means of gear wheels, is superfluous according to the invention. Any appreciable increase of weight of the motor is prevented and highest safety of operation is warranted.

Hitherto, the design of motors for flying in high altitudes was based upon the conditions of the start, i. e., upon the condition of the atmosphere prevailing at the ground. The present invention starts from the consideration that it is not preferable to base the design of a gear-

ing for an aircraft upon the condition of an atmosphere in which the aircraft has to work by far for the shortest period of its operation only.

In designing a gearing the invention starts from the conditions met by the gearing in operating altitudes, i. e. in an atmosphere in which the temperature of the air is not about +15° C. but for instance —35° C. If the limit temperature is chosen to be 100° C, a substantial higher pressure ratio of the charger may be used warranting the same resistance of the motor to knocking, i. e. warranting the same sensitiveness of the combustion to the temperature of the charger.

If now a motor, designed according to the invention in agreement with the above mentioned principles, approaches the ground from the altitude upon which the calculations for the design of the motor were based, the temperature of the air gradually increases resulting in an increase of the charging temperatures which soon become inadmissible. Therefore, the invention shows steps to allow a motor constructed to operate in certain altitudes to operate in the atmosphere prevailing at the ground also.

According to the invention the number of revolutions of the motor is gradually decreased during descent to thereby also decrease the temperature of the charge. In accordance with the kind of drive of the charger, the number of revolutions of the latter, its pressure ratio and the charging temperature supplied by the charger also are reduced. Whereas, hitherto during flight in higher altitudes the number of revolutions of the motor shaft and therefore also that of the crank shaft remained nearly constant in all altitudes, the number of revolutions of the charger, however, were altered in proportion to the number of revolutions of the crank shaft, the present invention proposes a connection between the charger and the crank shaft, maintaining in a known manner the same number of revolutions and thereby a substantial alteration of the number of revolutions of the crank shaft in dependence on the height of flight.

This alteration of the number of revolutions of the crank shaft in dependence on the height of flight, however, is by itself not sufficient to provide a usable motor for flying in large altitudes, because the number of revolutions of the crank shaft at the ground would have to be reduced so far that due to want of power the start of the aircraft would be impossible. Therefore, according to the invention larger numbers of revolutions of the motor and the crank shaft are again used at the ground and a cooling medium is sprayed in to reduce the charging temperature during start in a reliable manner as far as to prevent knocking of the motor.

To prevent the pilot from maintaining during the start or shortly after the start the high number of revolutions also after the cooling medium is exhausted a time switch may be provided according to the invention which warrants the decrease of the number of revolutions in good time before the reserve of cooling medium is completely exhausted. The gearing according to the invention, therefore, is characterized by a substantial alteration of the number of revolutions of the crank shaft in the range of flight in high altitudes.

To obviate damages regulators, i. e. regulators limiting the number of revolutions, directly depending on the atmosphere are provided which either (with regard to the charging temperature and the knocking of the motor) prevent exceeding the admissible number of revolutions in any height or automatically adjust certain numbers of revolutions, by acting upon the admission to the cylinder or upon the pitch of the air propeller, in accordance with the height of flight. To more clearly explain the advantages obtained by the present invention an example for the calculation of a 100 HP aircraft motor is given below, the curves illustrating the output obtained thereby are shown in Figs. 1 and 2.

Assuming a charging pressure of 1.35 ata would be required in an altitude of 7.5 km the limiting temperature of the charge (limiting value preventing knocking) may be fixed to 110° C. The charger obtains these conditions at a peripheral speed at the runner of the charger of about 43 cm/sec. For 100 HP in a height of flight of 7.5 km the number of revolutions of the crank shaft of the motor may be assumed to be 3400 r. p. m.

From the curve *a*, relating to the number of revolutions, shown in Fig. 1 it may be seen how the number of revolutions of the crank shaft must be reduced in accordance with the invention with decreasing height of flight, i. e. with increasing atmospheric temperature, to warrant that the charging temperature of 110° C is not exceeded. The number of revolutions of the crank shaft at the ground therefore should be allowed only to be 2760 r. p. m. that is about 80% of the number of revolutions at the altitude which was used as the base of calculation. At a uniform charger pressure (as in the assumed height of flight of 7,5 km and of 1,35 ata) a motor efficiency at the ground of about 910 HP results, whereas without the use of the regulation of the number of revolutions of the crank shaft such a motor would not at all be capable of operation at this charging pressure due to the phenomenon of knocking appearing near the ground.

To obtain the object aimed at according to the invention, however, an important step still was required to be considered because it must be prevented that a reduction of the number of revolutions of the crank shaft of about 20% also is accompanied by a reduction of the internal motor efficiency of 20%. To prevent this, the motor is, as may be seen from the curve shown in Fig. 2, operated not only in the hitherto usual manner rather far to the left (point A in Fig. 2) but also to the right of the maximum of its curve of efficiency of number of revolutions in a wide range of numbers of revolutions in which unimportant alterations in efficiency only occur.

In the example given here the motor efficiency between 3400 and 3200 r. p. m. practically is constant and after reducing the number of revolutions of 3400 for about 20%, i. e. to 2760 r. p. m. the motor efficiency is 8% only less than the highest efficiency.

But also the efficiency demand of the charger has been decreased for 95 HP due to the decrease of the number of revolution so that in between the charger-motor-aggregate both influences (decreasing motor efficiency decreasing efficiency demand of the charger) are by the alteration of the number of revolutions of the crank shaft compensated in such a surprising favorable manner that the useful work of the air propeller remains about constant up to the large height of flight of 7,5 km.

Fig. 1 shows as an example a diagram of the efficiency of a gearing according to the inven-

tion obtained in large altitudes. Be it assumed that a motor efficiency of 1000 HP is to be obtained in an altitude as high as possible and that the constructional configuration of the motor allows a number of revolutions of the crank shaft of 3400 r. p. m.

The curve *b* in Fig. 1 characterizes a motor the charger of which is based as hitherto upon a charging air temperature of 110° C. at the ground and at full number of revolutions of motor. If the aircraft climbs the number of revolutions of the motor (1. line *b*) and therewith the height of supply of the charger cannot be further increased. The output of 1000 HP is in the best possible case only just attained in a height of flight of 5,75 km. Above the height of 5,7 km. and particularly above the height of 7,5 km. the superiority of the regulation proposed according to the invention is particularly high (compare *a* in Fig. 1).

A third efficiency diagram is shown as curve *c* in Fig. 1. The charger is the same as that assumed for obtaining the curve *a*. At heights of flight below 7,5 km. knocking of the motor occurs which, if the number of revolutions of the motor and the charger are maintained constant, may be prevented by a continuous decrease of the charging pressure only. Near the ground the charging air of a charger having such a high pressure ratio reaches a temperature of about 160° C. and the charging pressure may amount to about 1,1 at *a* only. The necessary decrease of the charging pressure and the bad degree of supply of air of such a high temperature cause an inadmissibily bad efficiency of the motor on the ground which with 614 HP is not sufficient to lift an aircraft with high load per unit of surface.

For the sake of a better survey of the gain and loss of efficiency respectively of the construction according to *a* and *c* the latter are shown in Fig. 1 in comparison with the hitherto usual design according to *b*.

The motor designed and controlled according to the invention has an efficiency near the ground of 7,5% and in altitudes above 7,5 km. it has a 25% higher efficiency than the ordinary construction using a constant number of revolutions of the motor. In heights of about 5–7 km the efficiencies according to *a* and *b* are nearly equal, but the essential consists in this that the same efficiency of 1000 HP here still could be obtained in a height of flight which is about 43% larger.

By way of purely diagrammatic illustrations modifications are to be described in the following which show the control arrangements with which an altitude gearing controlled by the number of revolutions may be provided. Besides Figures in which for explaining the invention efficiency curves are plotted down other Figures show by way of example the arrangement and cooperation of control devices.

In these drawings:

Fig. 1 illustrates comparing curves and confronts the efficiency of the arrangement according to the invention with that of ordinary arrangements,

Fig. 2 shows an efficiency curve obtained in high altitudes,

Fig. 3 shows the arrangement of a barometer box for influencing the number of revolutions of the motor by altering the pitch of the air propeller,

Fig. 4 shows a barometer box as illustrated in Fig. 3, however, in connection with a hand lever guided by the pilot, and

Fig. 5 illustrates a barometer box as shown in Fig. 3 in connection with the throttling valve of a charger and the hand lever.

In the arrangement shown in Fig. 3 a barometer box acts upon the number of revolutions of the motor by influencing the pitch of the air propeller so that a certain number of revolutions is coordinated to each height of flight, i. e., the larger number of revolutions to the larger height of flight. The variable pitch propeller 1 is driven by the crank shaft 2 of the aircraft motor 3. The charger 3' is connected to the shaft 2 by way of a gearing of unchangeable gear ratio. The adjustment of the propeller blades 4 and 5 is hydraulically effected in a well-known manner not shown in the drawings by a control piston not visible in the drawings and mounted in the hub 6 of the air propeller. Oil under pressure is supplied to and drawn off the control piston by two pipes 7 and 8 respectively. A centrifugal governor 9 is driven by the aircraft motor by way of the bevel gear wheels 10 and 11. The centrifugal force of the governor pendulums 12 and 13 is compensated by a spring 14 acting on the one side of the governor and bearing with its free end against a cam 15 which is mounted upon a rotatable axis upon which also a lever 16 is arranged. The latter is driven by an indirectly acting pressure regulator controlled by pressure oil. Below this regulator and its operation will be described in detail.

On an increase of height of flight the barometer box 18 extends and correspondingly displaces the control slide 19 in such a manner that oil under pressure reaches the cylinder space 20. A piston 21 arranged in the cylinder 20 now moves in the direction of the arrow *p* until the control slide 19 which together with the barometer box 18 is returned by the piston rod 23 under the action of the slotted guide rod 22 again reaches its original center position in which the control edges of the slide 19 close the passages 24 and 25 feeding oil under pressure to the piston 21. The movement of the piston rod 23 is transmitted by way of the lever 16 to the cam 15 so that the spring 14 is tensioned and the control piston 26 of the regulator of the variable pitch propeller is shifted in a direction causing a higher number of revolutions of the air propeller. By a corresponding formation of the cam 15 and the slotted guide 27 of the lever 16 any desired relationship according to physical rules may be obtained between height of flight and number of revolutions of the motor. If the adjusting powers of the barometer box are sufficient for a direct regulation, the indirectly acting regulator 17 controlled by auxiliary power for instance may be replaced by a simple barometer box.

According to the construction shown in Fig. 4 the number of revolutions of the motor is controlled by a barometer box in such a manner that with a variable pitch propeller maintaining a definite number of revolutions a law of control of the number of revolutions depending on the hand lever actuated by the pilot is additionally subjected to the influence of the conditions prevailing in the altitude in which the aircraft operates and affecting the barometer box. As in the example of the invention explained above, the variable pitch propeller is driven by the crank shaft 2 of the aircraft motor 3. In this case also the charger 3' is connected by way of a gear to

the shaft 2 in an unchangeable ratio of gearing. The adjustment of the propeller blades 4 and 5 also is hydraulically effected by a control piston to and from which oil under pressure is fed and drawn off respectively by pipes 7 and 8 respectively. The arrangement of the centrifugal governor 9, 12, 13 and of the spring 14 exactly corresponds to that shown in the construction described above. The construction and operation of the regulator 17 also are as described above. The arms 36 and 37 allow the action of the regulator 17 upon the spring 14. Simultaneously, in this modification the spring 14 and thereby the centrifugal governor 9, 12, 13 are under the influence of the hand lever 32 actuated by the pilot. Connected to the lever 32 is a rod 31 the other end of which is connected to a rod 33. By this arrangement the hand lever 32 is connected to the cam 34 by way of the rods or links 31 and 33. The cam 34 as well as the rod 33 are rigidly connected to the axis 35 which in turn is rotatably journalled. If the aircraft continuously flies in a certain height or altitude and if the piston rod 23 of the regulator 17 remains in its position, then by shifting the hand lever 32 and the connecting rods 31 and 33 the tension of the spring 14 may be altered by way of the cam 34 and the toggle lever system 35, 37, 38. Hereby due to the shifting of the control pistons 26 the control piston not shown in the drawings and mounted in the propeller hub 6 also may be influenced by way of the pipes 7 and 8. Consequently, the position of the pitch angle of the blades of the variable pitch propeller choosen by the pilot is additionally altered by the action of the barometer box. As has already been explained in connection with the construction shown in Fig. 3, the piston rod is moved in the direction of the arrow *p* whereby by way of the toggle lever system the tension of the spring 14 is increased and thereby the number of revolutions of the motor also is increased. By suitably constructing the indirectly acting regulator 17 or by inserting cams, curves, and the like, not shown in the drawings, the relationship according to physical rules between the height of flight and the number of revolutions of the motor may be fulfilled. In this modification also the indirectly acting regulator controlled by an auxiliary power may be replaced by a simple barometer box.

In Fig. 5 a construction is shown according to which the action of the barometer box upon the number of revolutions of the motor influences the admission to the cylinder. The arrangement and operation of the barometer box 17, the centrifugal governor 9, 12, 13 and the spring 14 is the same as described in connection with the above explained constructions. The crank shaft 51 of the aircraft motor 52 drives the air propeller 53 and the charger 54 by way of the gear wheels 55 and 56 and the centrifugal governor 9 by way of the bevel gear wheels 10 and 11. The centrifugal force of the governor pendulums 12 and 13 is compensated by a spring 14 the ends of which bear against the governor 9 and the cam 15 respectively which latter is driven by way of the lever 16 from the indirectly acting regulator 17 controlled by oil under pressure. If the height of flight is increased, the piston rod 23 is, as in the construction described above, moved in the direction of the arrow *p* and by way of the lever 16 displaces the cam 15 which compresses the spring 14 so that the tension of same is increased. To maintain equilibrium between the tension of the spring 14 and the centrifugal force of the pendulum weights 12 and 13 the number of revolutions of the motor must increase. The cam 15 and the slotted portion 27 of the lever 16 show curves through which in any desired height of flight an exactly set and prescribed highest number of revolutions of the motor automatically is adjusted which number of revolutions for instance may be determined by the knocking limit.

Up to this prescribed highest number of revolutions any desired number of revolutions may be adjusted by opening and closing the throttle valve arranged in the air admission pipe of the charger and operated by the hand lever 57 by way of the linkage 58, 59, 60, 61 and 62. The rod 60 swings around the fixed pivot of the two-armed lever 64 and the slotted portion 65 of the rod 66 of the centrifugal governor 9 slides along the bolt 67 of the lever 64.

If for instance owing to a too far opening of the throttle flap 63 or for any other reason the admissible highest number of revolutions is exceeded in a certain height of flight, the rod 66 attacks the lever 64 and lifts the latter off its fixed stop 68 against which it is pressed by the spring 69. By the movement of the lever 64 the toggle levers 59 and 61 are stretched and the throttle flap 63 is closed so far that the number of revolutions is reduced to the prescribed highest number of revolutions. This regulating device under all circumstances prevents that the highest numbers of revolutions prescribed for the various heights of flight are exceeded whereby the danger of knocking of the motor is safely removed. The regulating arrangement shown in Fig. 5 for instance may also be used in connection with a charging pressure regulator connected between the hand lever 57 and the throttle flap 63 and which is influenced by the lever 64 actuated by the centrifugal governor 9. Below the leading ideas forming the basis and the gist of the present invention may once more be summarized:

To meet the particular atmospheric conditions prevailing in high altitudes the motor together with its charger has been provided with an unchangeable mechanical gearing for transmitting the power from the crank shaft upon the charger.

The increase of temperature of the outer air on flying downwardly is compensated by a substantial reduction of the number of revolutions.

Sufficient power for starting is obtained in a manner known per se by temporary cooling the charge whereby when the cooling medium is exhausted, the number of revolutions of the motor is automatically reduced in accordance with the invention.

The motor is operated in the flat portion of its efficiency curve, i. e. beyond its efficiency maximum and also downwardly as far as to its number of revolutions lying about 80% below the mechanically admissible highest number of revolutions, the efficiency demand of the charger and the internal motor efficiency practically compensating each other.

FRITZ GOSSLAU.

PUBLISHED
MAY 18, 1943.
BY A. P. C.

F. GOSSLAU
GEARING FOR AIRCRAFTS FLYING
IN LARGE ALTITUDES
Filed Nov. 9, 1939

Serial No.
303,551
5 Sheets-Sheet 1

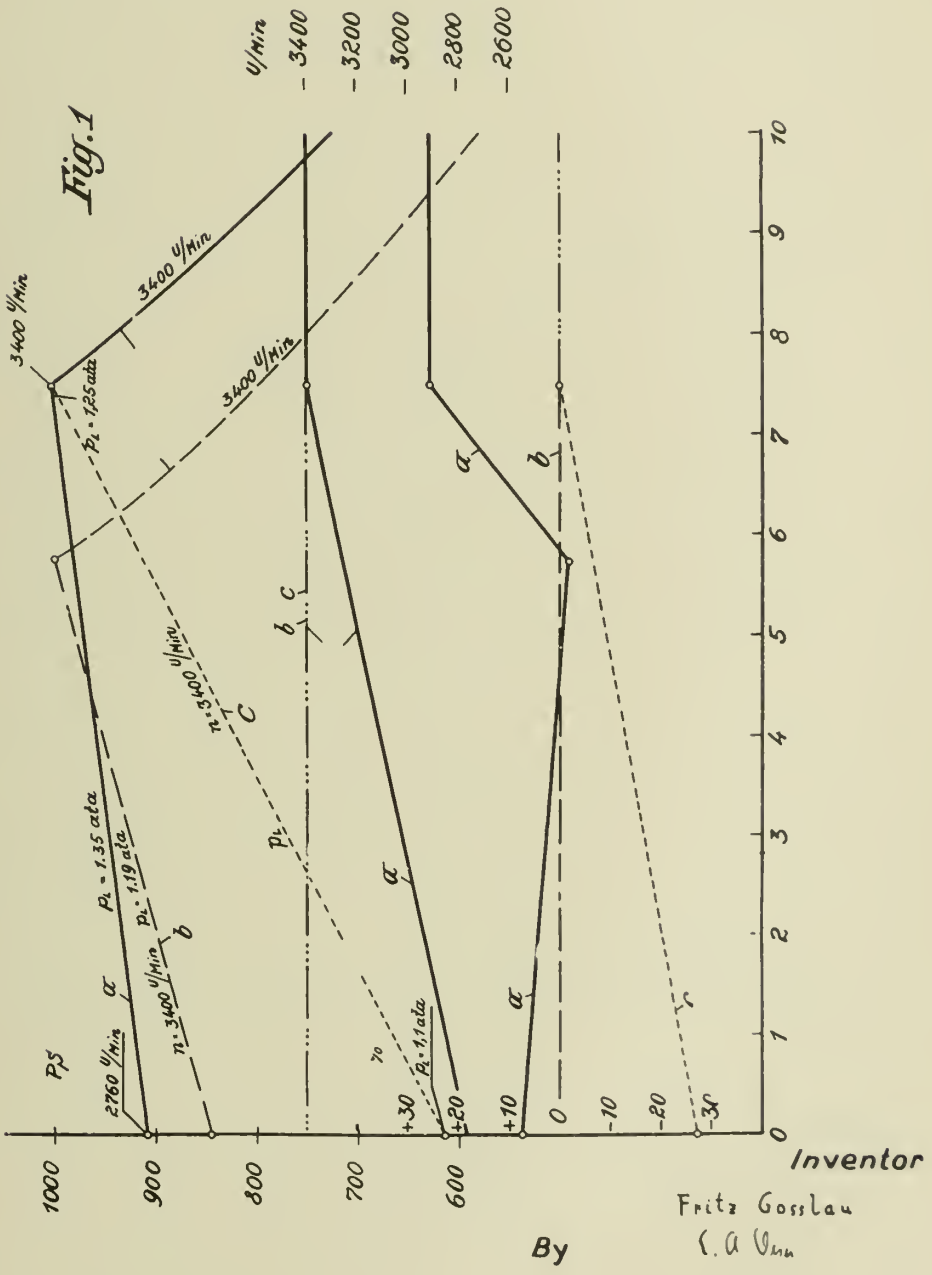


Inventor
Fritz Gosslau
By C. A. Vun
Agent

PUBLISHED
MAY 18, 1943.
BY A. P. C.

F. GOSSLAU
GEARING FOR AIRCRAFTS FLYING
IN LARGE ALTITUDES
Filed Nov. 9, 1939

Serial No.
303,551
5 Sheets-Sheet 2

*Fig. 2*

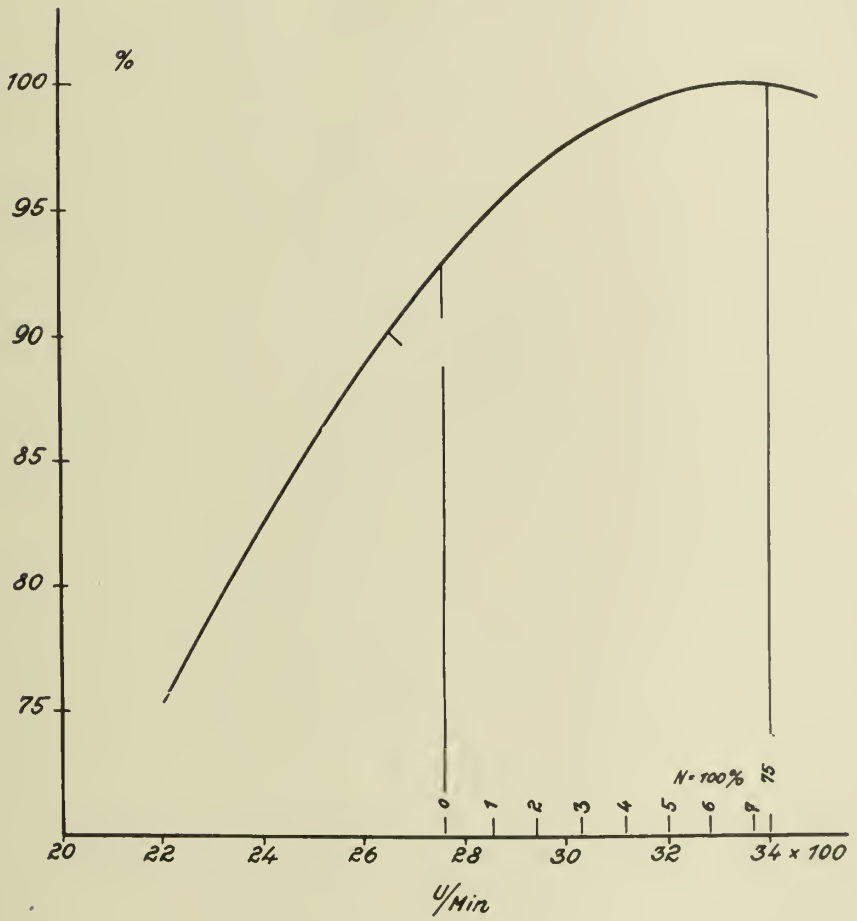


*Inventor*
Fritz Gosslau

*By*
C. A. Brun
Agent

PUBLISHED
MAY 18, 1943.
BY A. P. C.

F. GOSSLAU
GEARING FOR AIRCRAFTS FLYING IN LARGE ALTITUDES
Filed Nov. 9, 1939

Serial No.
303,551
5 Sheets-Sheet 3

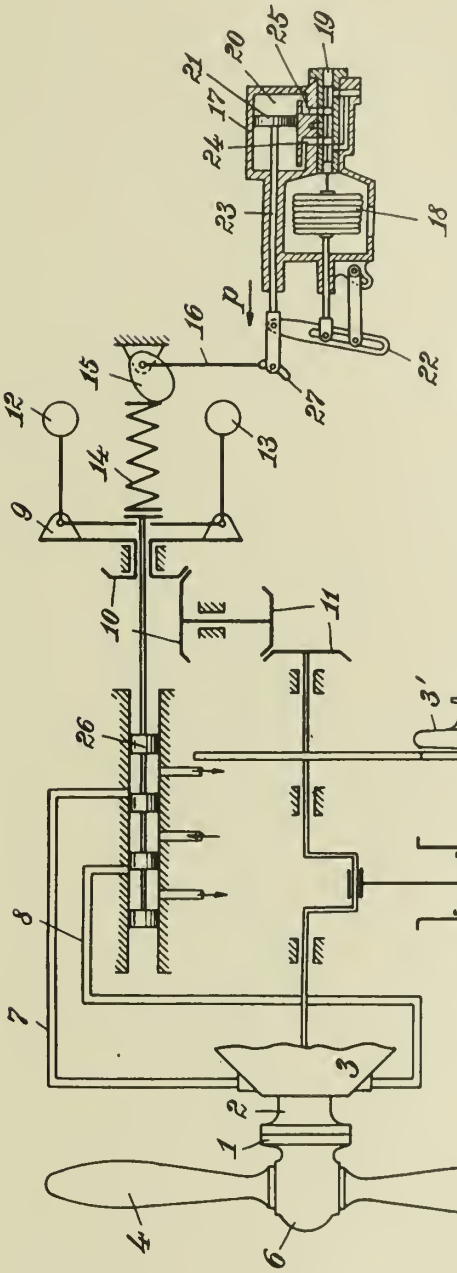


Fig. 3

Inventor

By Frits Gosslau
C. A. Olsen.
Agent

PUBLISHED
MAY 18, 1943.
BY A. P. C.

F. GOSSLAU
GEARING FOR AIRCRAFTS FLYING IN LARGE ALTITUDES
Filed Nov. 9, 1939

Serial No.
303,551
5 Sheets-Sheet 4

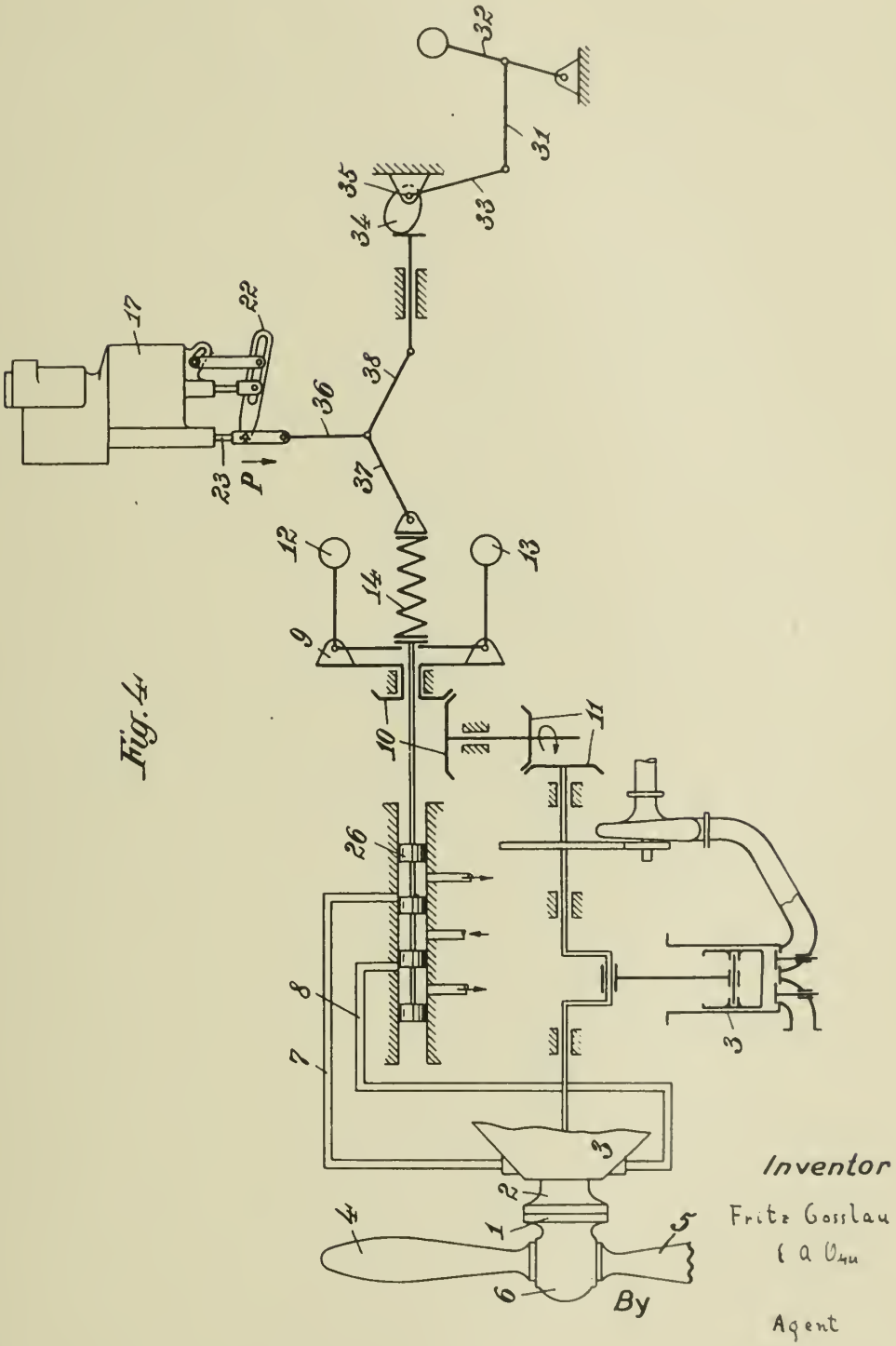


Fig. 4

Inventor
Fritz Gosslau
I a Uhu

Agent

PUBLISHED
MAY 18, 1943.
BY A. P. C.

F. GOSSLAU
GEARING FOR AIRCRAFTS FLYING
IN LARGE ALTITUDES
Filed Nov. 9, 1939

Serial No.
303,551
5 Sheets-Sheet 5

Fig. 5

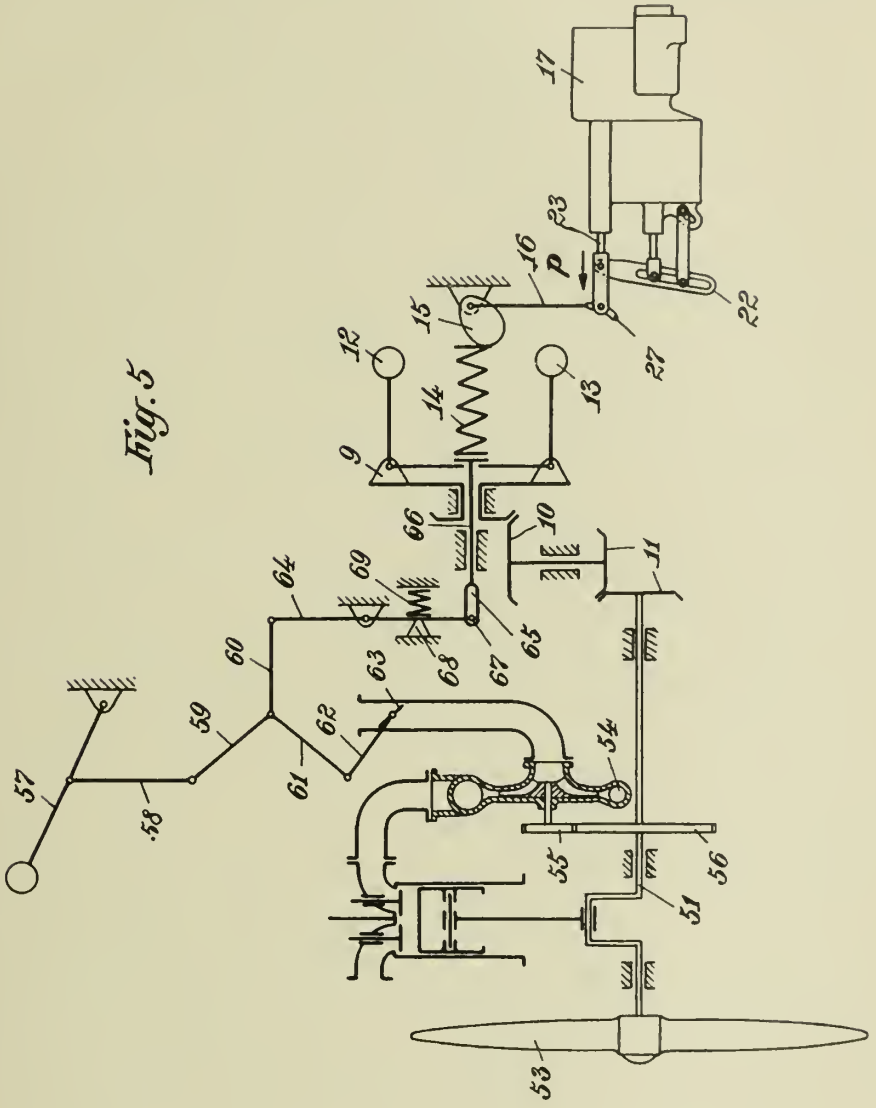


Inventor

Fritz Gosslau

By

Agent

Published May 18, 1943 Serial No. 303,854

# ALIEN PROPERTY CUSTODIAN

## ELECTRIC MULTIPLE-WAY SWITCH

Hans Peterreins, Nuremberg, Germany; vested in the Alien Property Custodian

Application filed November 10, 1939

The invention relates to an electric multiple-way switch and has for its purpose a construction which avoids the undesired sparking and enables a proportionally small construction without large air clearances between the metal parts. It has further for its purpose to provide such a multiple-way switch also with a particular device for increasing the security against sparking during the switching operation. Further the multiple-way switch is fitted with a device which disconnects electric apparatus (relays or the like) being in circuit with the switch during the switching operation. The new switch can be used according to requirement for the one or the other purpose.

The invention is shown by way of example in the annexed drawings in which

Fig. 1 is a longitudinal section across the switch,

Fig. 2 is a section on line II—II of the Fig. 1 seen in the direction of the arrow,

Fig. 3 is a rear view of a further form of execution,

Fig. 4 is a section on line IV—IV of the Fig. 3 and

Fig. 5 is a partial section on line V—V of the Fig. 3.

The drawing shows a three-pole switch. The invention may be realised in multiple-polar switches as well as in unipolar switches.

The switch casing consists of the top plate 1 and the base plate 2 which are connected with each other by bolts 3 and arranged at distance from each other. The axle 4 is situated in these plates 1 and 2 made of insulating material and can be turned by means of a hand-wheel $r$.

On the plates 1 and 2 contact terminals $k^1$, $k^2$ and $k^3$ for the current supply are fixed. Between the spring tongues of these terminals slide the disks $s^1$, $s^2$ and $s^3$ being turned by aid of the axle 4 and made of conducting material.

Each of the disks $s^1$, $s^2$ and $s^3$ is provided with a forked terminal $p^1$, $p^2$ and $p^3$ consisting of two tongues elastic towards each other. These forked terminals $p^1$, $p^2$ and $p^3$ coact with the contact tongues $z^1$, $z^2$ and $z^3$ which are bent angular and arranged on the insulating plates 1 and 2, as indicated by the drawing. Several of the contact tongues $z^1$ as well as several of the contact tongues $z^2$ and several of the contact tongues $z^3$ are arranged radially on the plates 1 and 2 respectively around the axle 4 in a circle and that in a number corresponding to the plurality of the switch steps. The contact tongues $z^1$ are illustrated in Fig. 2. The tongues $z^2$ and $z^3$ are arranged above and underneath the plate 2 in the same manner.

In turning the axle 4 and also in turning the disks $s^1$, $s^2$ and $s^3$ the forked terminal $p^1$ is brought into contact with all the attached contact tongues $z^1$ one after the other as well as the forked terminal $p^2$ with the contact tongues $z^2$ and the forked terminal $p^3$ with the contact tongues $z^3$.

The axle 4 is surrounded by a sleeve made of insulating material. In the example shown in the drawing the sleeves 5 and 6 serve to receive the switch members $s^1$, $p^1$ and $s^2$, $p^2$ and $s^3$, $p^3$ respectively. The disks $s^1$, $s^2$ and $s^3$ are fixed accordingly on the side surface of a flange of the sleeves 5 and 6.

The screws 7 serve for fastening the disk $s^1$, the skewed screws 8 for fastening the disk $s^2$ and the screws 9 for fastening the disk $s^3$.

It is not necessary to arrange the disks $s^1$ and $s^2$ on the same sleeve but according to circumstances two insulating sleeves may be provided.

On the upper collar 10 of the sleeve 5 adjoins the sleeve 11 serving for bearing the axle in the plate 1 and supports against the plate 1 by means of a flange-like edge part 12. A corresponding sleeve 13 adjoins the lower collar 14 of the sleeve 5. This sleeve 13 can be screwed tight by the nut 15 consisting also of insulating material, so that for all sleeves a good fastening and a good tightening is secured.

On the sleeve 5 is also fixed the disk 16 consisting of insulating material and provided with notches, grooves 17 or the like. In these cavities a guide roller 18 engages which is supported by a lever 20 swinging around the pivot 19 and consisting of parallel flat bars, as shown in the example of execution. This lever 20 is influenced by a spring 21 which has the tendency to engage permanently the roller 18 with the cavity in which it just is. This locking device serves to secure the snap movement. By this device an unvoluntary loosening of the connected stop is reliably avoided.

It is possible to provide further intermediate sleeves for high tension switches which fill the clearance between the sleeve 5 and the plate 1 or the clearance between the sleeves 5 and 6 and the plate 2 respectively so that any sparking can be avoided reliably.

In any circumstances the axle 4 can be also constructed of insulating material, for instance of synthetic-press-material. In this case it is of a special advantage to construct the axle

with one of the sleeves, for instance with the sleeve **5** in one piece.

According to a further feature a contact member is intersected before the forked terminal $p^1$ serving for leading the current away. Said contact member serves as initial step and consists of the slider **22** being arranged on the disk $s^1$. This slider is placed in such a manner that it reaches accordingly the contact point $z^1$ of the next step before the forked terminal $p^1$ leaves the contact point of the proceding step. The slider is fixed on the disk $s^1$ by aid of a small socket **23** made on insulating material and connected with the current supply terminal $k^1$ by aid of the spiral **24** acting as a resistance, the terminal **25** and the disk $s^1$.

The resistance **24** being connected on the one side with the terminal **25** and on the other side with the socket **23** is arranged around the circumference of the sleeve **5**.

The same device of initial step is provided for the disks $s^2$ and $s^3$. This device is not illustrated in the drawing by reason of clearness.

In moving the switch from one step to an other the initial step member **22** reaches the contact point of the next step before the forked terminal $p^1$ leaves the contact point of the preceding step. Thereby a weak current flow takes place through the resistance **24**, the slider **22** and the contact point of the next step. Therefore no sparking occurs. When the forked terminal $p^1$ then comes into contact with the contact point of the next step the slider **22** leaves this contact point and remains during the adjusted connection between this and the following contact point. The normal current flow now takes place through the disk $s^1$ and the forked terminal $p^1$.

The multiple-way switch may also be provided with a device which disconnects during the switch operation such electrical apparatus (relays or the like) which are connected with the switch. Such a device is shown in Figs. 3–5.

The lever **20** carries a contact member **26** coacting with a counter contact **27** which may be placed on a suitable point of the casing of the switch, for instance on the top plate **1** and is connected in circuit of an apparatus put in circuit of the switch, for instance a relay, switch gear or the like. In switching, i. e. in turning the disks $s^1$, $s^2$ and $s^3$ and **16** the lever **20** is moved in direction of the arrow $x$ before it is possible for the roller **18** to engage with the notch **17**. Thereby the contact member **26** is released from the counter contact **27**, while both these contacts touch in the switch position of the switch. Therefore the connection **26** and **27** is interrupted during the switch operation, i. e. during the time in which the forked terminals $p^1$, $p^2$ and $p^3$ are moved towards the next corresponding contact tongues $z^1$, $z^2$ and $z^3$, so that the apparatus being connected in circuit with the contact **27** is interrupted.

If both the devices, the initial step device **22**, **23**, **24** and **25** as well as the disconnecting device **26**, **27** are provided the switch represents a universal apparatus. It may be used according to requirements.

HANS PETERREINS.

PUBLISHED
MAY 18, 1943.
BY A. P. C.

H. PETERREINS
ELECTRIC MULTIPLE-WAY SWITCH
Filed Nov. 10, 1939

Serial No.
303,854
2 Sheets-Sheet 1

Fig.1

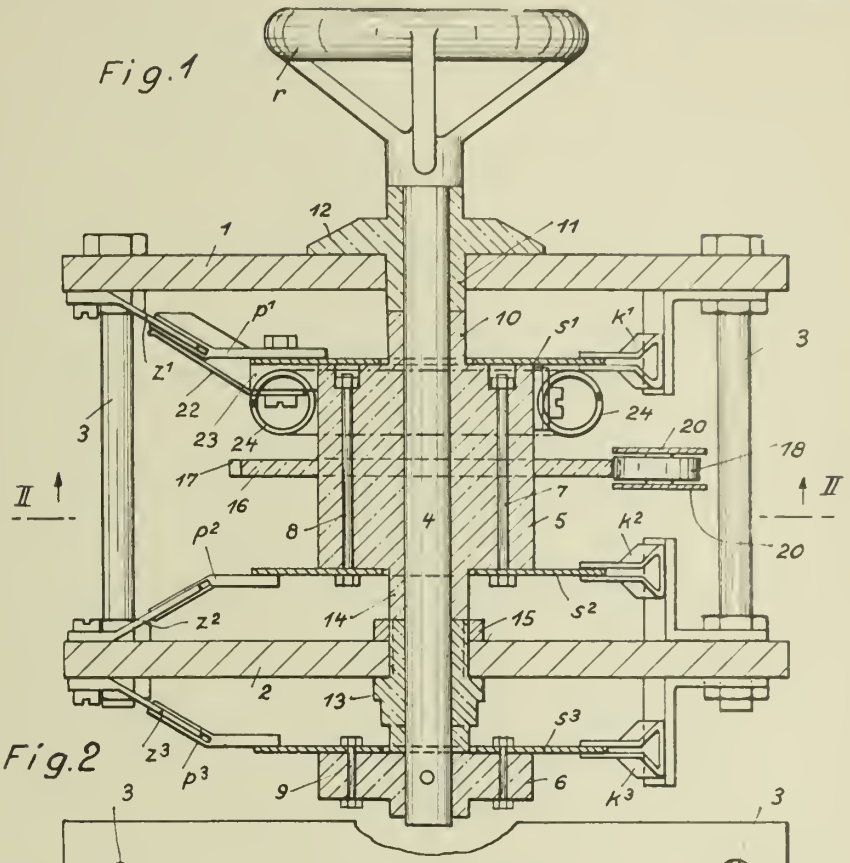


Fig.2

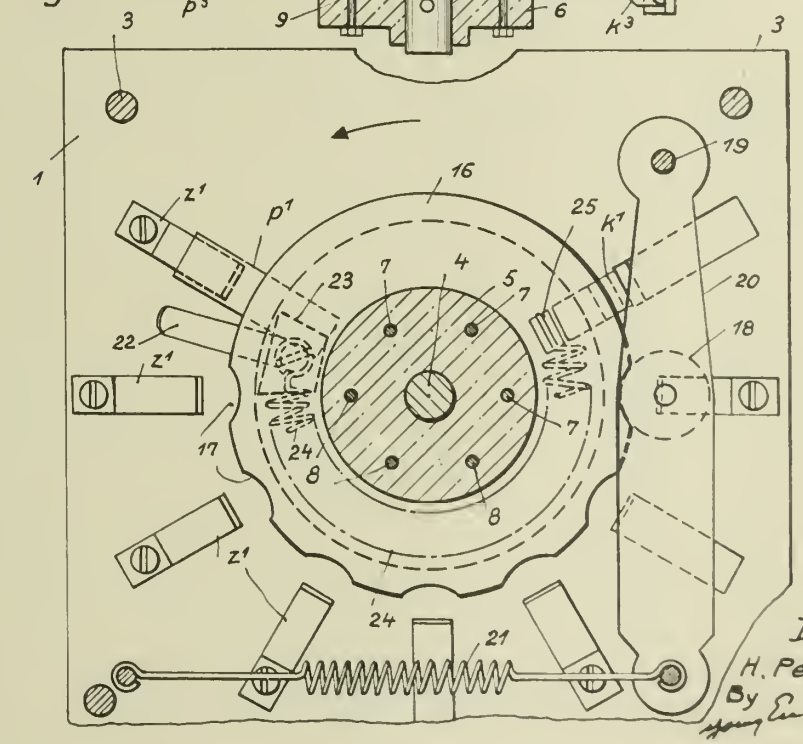


Inventor:
H. Peterreins
By Emery & Thompson
Attorneys

PUBLISHED
MAY 18, 1943.
BY A. P. C.

H. PETERREINS

ELECTRIC MULTIPLE-WAY SWITCH

Filed Nov. 10, 1939

Serial No.
303,854

2 Sheets-Sheet 2

Fig. 3

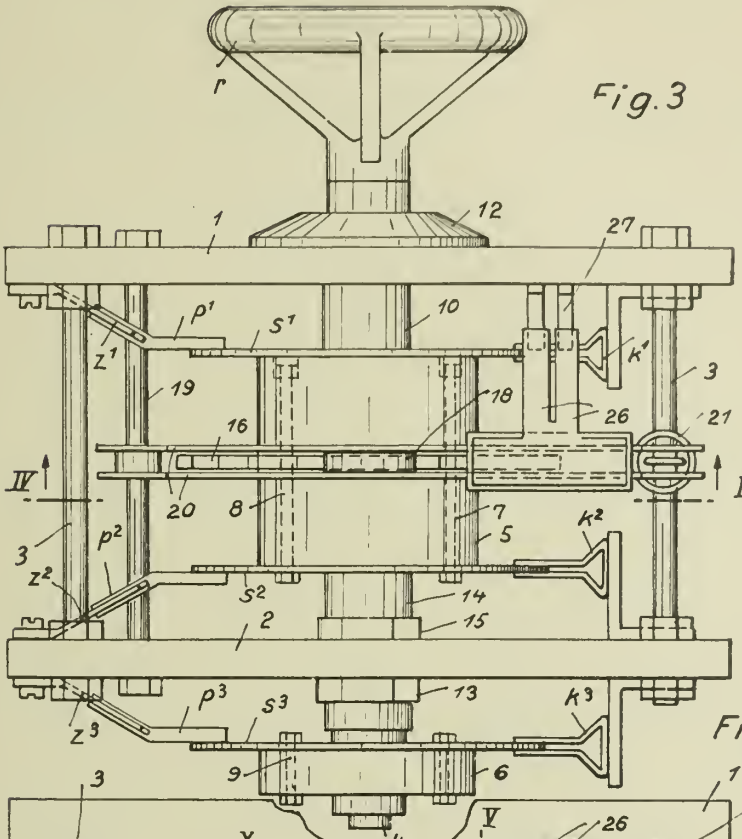


Fig. 4

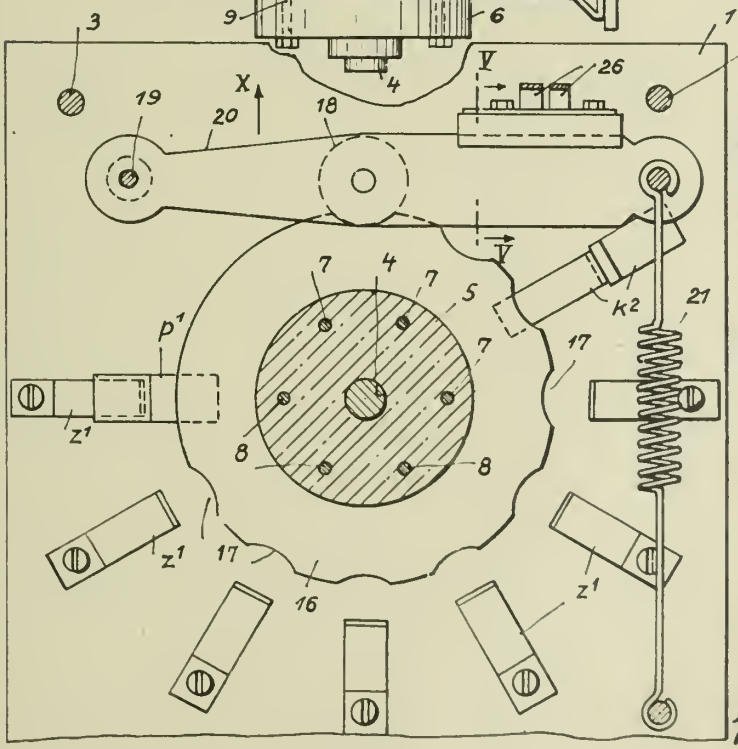


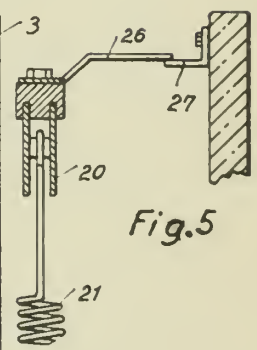


Fig. 5

Inventor:
H. Peterreins
By Emery & Thompson
Attorneys

Published May 18, 1943 Serial No. 303,885

# ALIEN PROPERTY CUSTODIAN

## OSCILLATION ABSORBERS

Oscar Cüpper, Diessen/Ammersee, Germany;
vested in the Alien Property Custodian

Application filed November 10, 1939

The present invention relates to a method of and means for absorption of oscillations more particularly for absorbing relative movements between the axis and the body of vehicles. The absorption may hydraulically as well as mechanically be effected.

The known oscillation absorbers generally are so constructed that the absorption effect either remains equal over the entire range of absorption or steadily increases according to a linear or a curve in a definite ratio to the magnitude of the oscillations. Moreover, so-called balancers, heeling absorbers, are known in which the relative movement between the axis and the body of a vehicle on the one side of the vehicle effects an equal or nearly equal relative movement on the other side of the vehicle to thereby maintain the body of the vehicle in a position substantially parallel to the road or track.

Now, the invention starts from the fact that a vehicle taking a curve is considerably more lifted on the inner side of the curve than on the outer side. The reason for this is that in the first case the power of the spring during release acts in the sense of the centrifugal force, whereas on the other side the spring counter-acts the centrifugal force. Hitherto the inclination of a vehicle taking a curve could only be prevented by means of the above mentioned balancers. Now the inventor has recognized that with regard to the relative small inclination on the outside of the curve it is only necessary to prevent lifting of the vehicle on the inside to obtain, besides absorption of oscillations, an extended steadying action without mutual connection between the absorber means at both sides of the vehicle.

The method of absorbing oscillations according to the invention consists in this that in a first range of absorption an absorption of the oscillations is effected, on exceeding a definite magnitude of oscillations the oscillation movements are entirely or nearly entirely braked and thereafter, in a second range of absorption further absorption of oscillations is effected as soon as a definite strain is reached between the body and the axis of the vehicle.

These two ranges of absorption may have different absorption effects. For instance, in the first range of absorption the absorption effect may increase according to a curve with the magnitude of the oscillations, whereas in the second range this effect increases according to a linear. Also each range may be subdivided in a plurality of individual ranges of different absorption.

The devices for carrying out the method according to the invention may be constructed as hydraulical as well as mechanical oscillation absorbers.

In connection with hydraulical oscillation absorbers the desired effect may be obtained by the fact that the flow of liquid in the absorber is interrupted between the two ranges of absorption, whereby the relative movement between the axis and the body of the vehicle also is interrupted. To this purpose the liquid displaced during the first range of absorption may be received by an additional space and the second range of absorption then may begin only if after filling of the additional space the pressure of the liquid has exceeded a predetermined value.

According to the invention the two ranges of absorption may be formed by throttling devices of different throttling action arranged one after the other, an additional space being connected to the pipes provided between the throttling devices. The additional space preferably consists of a cylinder in which a spring-loaded piston is arranged. On a one-sided movement of the oscillation absorber the one side of the piston is connected to the pressure space of the absorber and the other side of the piston to the reserve or space chamber, whereas in connection with double-acting oscillation absorbers the two sides of the piston each are connected to a pressure chamber.

In a very simple manner the effect also may be obtained by arranging two valves having different throttling actions in parallel in the path of the liquid displaced from the absorber cylinder. One of these valves, i. e. the one having the smaller throttling effect is closed on exceeding a definite relative movement between the axis and the body of the vehicle, whereas the other valve is opened for a certain amount after a further increase of pressure. Between the point of time in which the valve having the smaller throttling effect is closed and the point of time in which the valve having the larger throttling effect is opened there is a period of time during which no relative movement occurs between the axis and the body of the vehicle.

A mechanical oscillation absorber may for this purpose consist of two or more friction absorbers arranged one behind the other, the maximum absorbing power of the one absorber being smaller for a definite amount, depending on the desired magnitude of the intermediate range, then the minimal friction power of the second friction absorber. To obtain a smooth change between the individual steps the two friction absorbers

are connected together by a resilient intermediate member the elasticity of which is chosen in accordance with the absorption efficiency of the two friction absorbers. Moreover, the distance the spring may move preferably is limited by stops to thereby fix the maximum mutual movement.

Further details of the invention may be seen from the following description of the drawings which show various examples of devices for carrying out the method according to the invention.

In these drawings:

Figs. 1 and 2 show diagrams explaining the operation of the device according to the invention,

Fig. 3 is a view of an absorber fitted to a vehicle,

Fig. 4 is a longitudinal section through a single-acting hydraulic oscillation absorber.

Fig. 5 illustrates a section through a double-acting hydraulic oscillation absorber,

Fig. 6 is a section through a hydraulic telescope-oscillation absorber,

Fig. 7 is a sectional view of a detail of the device shown in Fig. 6,

Figs. 8 and 9 show sectional views of two further modifications of double-acting hydraulic oscillation absorbers,

Fig. 10 shows a section through another construction of a detail of the device illustrated in Fig. 9,

Fig. 11 is a section of a further hydraulic oscillation absorber,

Figs. 13 and 14 show a longitudinal section and cross section respectively through a single-acting mechanical oscillation absorber, and

Figs. 15 and 16 show a longitudinal section and a section on line XVI—XVI of Fig. 15 respectively of a double-acting mechanical telescope-oscillation absorber.

In the diagram shown in Fig. 1 the relative movements between the axis and the body of a vehicle are plotted on the ordinate, whereas the distance of the road traversed by the vehicle is plotted on the abscissa. If the vehicle traverses the distance I absorption according to the curve A occurs, the relative movement obtaining a magnitude $a$. Then suddenly (in praxis of course with a certain change) interruption of the relative movement occurs during which time the distance II corresponding to the straight line B is traversed. Then again during traversing the distance III relative movement of the magnitude $b$ is effected according to a linear C.

In Fig. 2 the centrifugal force acting upon the absorber is plotted on the ordinate and the relative movement is plotted on the abscissa. The centrifugal force of the magnitude $x$ produces a relative movement of the magnitude $a$. During further increase as far as to the magnitude $y$ the relative movement is positively interrupted and further relative movement is effected only after exceeding of this magnitude of power.

From Figs. 1 and 2 it may be seen that the distance II is the shorter the sooner the magnitude of power $y$ is reached. The magnitudes $x$ and $y$ may exactly be determined by correspondingly constructing and dimensioning the devices.

Fig. 3 shows the arrangement of the oscillation absorber on the vehicle. The rear axis 1 is rigidly connected to the spring 2 of the vehicle. Fixed to the frame 3 of the vehicle is the oscillation absorber 4 which is connected to the axis 1 of the vehicle by means of a linkage 5, 6.

Fig. 4 shows a single-acting oscillation absorber in the casing 7 of which a cylinder 8 containing a piston 9 is provided. The absorber shaft 10, driven by the lever 5 (see Fig. 3), effects the drive of the piston 9 by way of a pair of levers 11, 12. In the casing 7 a second cylinder 13 of considerably smaller dimensions is provided in which operates a piston 14 loaded by a spring 15. Fixed to the piston 14 is an extension 16 which cooperates with a preferably elastic stop 17. The space of the cylinder 13 between the piston 14 and the stop 17 is connected to the spare chamber 19 by way of a passage 18 so that on movement of the piston 13 the corresponding change of space between the piston and the stop is possible. The tension of the spring 15 may be adjusted by a screw 20. The end of the cylinder 8 is provided with two bores 21 and 22 which are closed by spring-loaded valve cones 23 and 24 respectively. In the valve cone 23 a passage 25 is provided. By way of a bore 27 the space 26 in front of the valve cone 23 is connected to the space of the cylinder 13 in front of the piston 14, whereas the space 28 in front of the valve cone 24 is connected to the spare chamber 19 by way of a passage 29.

The operation of the oscillation absorber shown in Fig. 4 is as follows:

If due to relative movement between the spring 2 and the frame 3 of the vehicle (see Fig. 3), for instance on mutual separation, the piston 9 is moved in the direction of the arrow 30, the liquid displaced from the cylinder 8 flows through the passage 25 or at a larger pressure by opening the valve 23 into the space 26 and from there by way of bores 27 into the cylinder 13 the piston 14 of which is shifted against the action of the spring 15 until the rod 16 abuts against the stop 17. Now, no further reception of liquid by the cylinder 13 is possible and the movement of the piston 9 is completely braked. A further relative movement of the members 2 and 3 (see Fig. 3) and therefore of the piston 9 now cannot occur as long as the spring power of the valve 24 is larger than the liquid pressure in the cylinder 8. If then this pressure is increased so far as to open the valve 24 the liquid may escape into the spare chamber 19 by way of the chamber 28 and the passage 29.

If now the piston 9 returns again against the direction of the arrow 30 liquid is sucked in from the spare chamber 19 by way of the snifting valve 31.

In case the oscillation absorber need be used without steadying action a connection 32 capable of being shut is provided between the chambers 26 and 28.

Fig. 5 shows a double-acting oscillation absorber operating in the one direction with and in the other direction without balancers. The absorber is provided with two cylinders 40 and 41 in which operate pistons 42 and 43 respectively. These pistons are driven by means of a cam lever 45 fixed upon the absorber shaft 44. Th cylinder 40 is connected to a cylinder 50 containing the spring-loaded piston 51 by way a valve 46 having a passage 47, a chamber 48 and a bore 49. Moreover, the high pressure cylinder 40 may be connected to the low pressure cylinder 41 by means of a high pressure valve 52 and passages 53, 54. The low pressure cylinder 41 in this case, therefore, corresponds to the spare chamber 19 of

the construction shown in Fig. 4. The space 55 behind the piston 51 may also be connected to the passage 53 by way of a bore 56. The passage 53, moreover, has a further bore 57 discharging into the cylinder 40 and closed by a low pressure valve 58.

The operation of this device is as follows:

If the pistons are moved in the direction of the arrow 59 the operation exactly corresponds to that of the device shown in Fig. 4, the valve 58, however, remaining closed. If the pistons are moved in the direction of the arrow 60 the liquid from the low pressure cylinder 41 flows by way of the passages 54, 53, 57 and the valve 58 into the high pressure cylinder 40.

The telescope-oscillation absorber shown in Fig. 6 has a cylinder 70 with a piston 71 which against the action of a spring 73 may be shifted upon its rod 72. The cylinder space 70 may be connected to the space 76 below the piston 71 by way of a bore 74 provided in the piston rod 72 and a high pressure valve 75.

The operation of this absorber is as follows:

If the piston rod 72 is moved in the direction of the arrow 77 the piston 71 first of all is not shifted, but the spring 73 is compressed about the distance *d*. Only if the pressure in the space 77 is so high that the valve 75 may be opened further movement of the piston rod 72 together with the piston 71 may occur.

Whereas according to the construction shown in Fig. 6 the space 78 containing the spring 73 is in open connection with the space 76, the corresponding space 79 of the construction according to Fig. 7 is closed and provided with a passage 80 as well as with a valve 81 which together correspond to the members 46, 47 shown in Fig. 5 and discharge into the space 82.

In Fig. 8 another double-acting oscillation absorber having a high pressure cylinder 90 and a low pressure cylinder 91 is shown which are provided with pistons 92 and 93 respectively. By way of bores 94, 95, valves 96, having a passage 97, and passages 98, 99 the space 90 is connnected to the space 91. The bore 94 may be closed by a valve 100 controlled by the piston 92. The stroke of the valve 100 is limited by a stop 101. Moreover, a high pressure valve 102 and a low pressure valve 103 are provided between the passage 98 and the cylinder 90. This arrangement operates in such a manner that if the piston 92 is moved in the direction of the arrow 104 the valve body 100 also is moved until it comes to bear against the walls of the bore 94 and thereby interrupts the flow of liquid through the valves 96, 97. On a corresponding increase of pressure flow of the liquid occurs by way of the high pressure valve 102. As the valve body 100 slides in the piston 92 the way of the piston 92 is independent on the stroke of the valve body 100.

The double-acting oscillation absorber shown in Fig. 9 also is provided with two cylinders 110 and 111 in which operate pistons 112 and 113 respectively. In the direction towards the driving cam 114 a smaller piston 115 and 116 respectively is provided in the pistons 112 and 113 respectively. The smaller pistons 115 and 116 are loaded by springs 117 and 118 respectively. The space 119, 120 between the large and the small pistons respectively is connected to the spare chamber 124 either by way of a bore 121 in the large piston 113 or by a slot 122 in the small piston 115 or according to Fig. 10 by way of a bore 123 in the small piston 115. The cylinder 110 is provided with a low pressure valve 125 and a high pressure valve 126 which are connected to the cylinder 111 by way of a passage 127.

With this absorber the absorption of small oscillations is effected by displacement of the small pistons and a movement of the large pistons is only possible if after the relative movement of the small pistons a corresponding pressure is produced in the cylinders 110 and 111.

The oscillation absorber illustrated in Fig. 11 also is provided with two pistons 130 and 131 slideably arranged one in the other between which a spring 132 is inserted. The space 133 between the pistons 130 and 131 is connected to the spare chamber 134 by way of a passage 135 and a valve 136, whereas the high pressure cylinder space 137 is connected to the spare chamber 134 by way of a valve 138 and a passage 139 or in connection with double-acting oscillation absorbers with the cylinder at the other side.

The oscillation absorber shown in Fig. 11 is provided with a vane piston 145 and the high pressure space 146 of this absorber is connected to an additional receiving space 148 having a spring-loaded piston 149 by way of a passage 147. Moreover by way of a passage 150 and the high pressure valve 151 the high pressure space 146 is connected to the low pressure chamber 152. Above the two chambers 146 and 152 a spare chamber 153 is provided.

A first mechanical oscillation absorber having a step-like action is shown in Figs. 13 and 14. An annular casing 161 with recesses 162 containing balls or rollers 164 loaded by springs 163 is arranged at a lever 160 connected to the axis of the vehicle. The lever 160 corresponds to the lever 5 shown in Fig. 3. As explained later on the spring-loaded balls or rollers 164 act as free wheel mechanisms. Upon an axis 166 fixed to the frame of the vehicle by screws 165 a bushing 167 having radially directed flanges 168 is pivotally mounted. The bushing 167, moreover, carries two circular discs 169 and 170 against the outer faces of which bear friction discs 171 and 172 respectively. These friction discs are covered by the base plate 173 and a plate 175 mounted upon a square-head 174 of the axis 166. The members 173, 171, 169, 167, 170, 172 and 175 may resiliently be pressed together by nuts 176 screwed upon the threaded portion 177 of the shaft 166 and leaf springs 178 arranged between the nuts 176 and the cover plate 175. Loosely mounted in the casing 161 is a ring 179 having flanges 180 which are radially directed inwardly and bear against the flanges 168 of the bushing 167 by means of springs 181.

The operation of the device just described is as follows:

If the lever 160 is moved in the direction of the arrow 182 the casing 163 and, by way of the free wheel mechanisms 163, 164 which are effective in this direction only as the recesses 162 are broader at one end, the ring 179 are moved in the same sense. The springs 181 are compressed between the flanges 168 and 180 until either their convolutions bear against each other or their tension becomes larger than the friction power of the absorber to be overcome. From this moment the bushing 167 and the discs 169, 170 are moved by means of the flanges 168 and after overcoming the friction produced by the friction discs 171, 172 are rotated with regard to the fixed plates 173, 175.

The double-acting telescope-friction absorber shown in Figs. 15 and 16 consists of a sleeve **185** with guide cover **186** fixed for instance to the frame of the vehicle. Upon the rod **187** fixed to the axis of the vehicle and formed at its end as a solid cone **188** the following members are arranged one behind the other. A slotted or multi-part cone **189**, a spring **190**, a solid cone **191** provided with a sleeve-like extension **192** and a flange **193**, an elastic disc **194** and a nut **195** with washer **196**. The cone **191** is surrounded by a multi-part or slotted cone **197** pressed against or upon the cone **191** by means of a spring **198** bearing against the flange **193**. The outer surfaces of the cones **189** and **197** carry a brake lining **199, 200**.

The operation of this device is as follows:

If when the sleeve **185** is fixed the rod **187** is moved in the direction of the arrow **201** first of all by the tension or power of the spring **190** the cone **189** is pressed against the cone **188** and thereby against the wall of the sleeve **185**. Due to the high friction with regard to the sleeve **185** and the free play or large clearance with regard to the rod **187** the cone **197** and the cone **191** with the extension **192, 193** are not moved by the rod **187** but remain in rest as long as the spring **190** for instance is completely compressed. Only then the two cones **190** and **197** are moved by the rod **187**.

Therefore, with the friction absorbers according to Figs. 13 and 14 as well as with the friction absorbers shown in Figs. 15 and 16 an absorption in two stages is obtained.

OSCAR CÜPPER.

PUBLISHED
MAY 18, 1943.
BY A. P. C.

O. CÜPPER

OSCILLATION ABSORBERS

Filed Nov. 10, 1939

Serial No.
303,885

4 Sheets-Sheet 1

Fig. 1

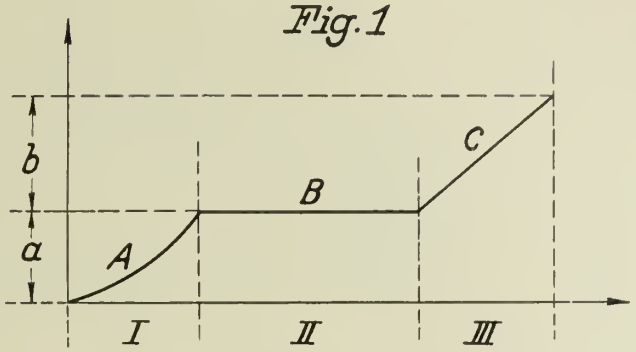


Fig. 2

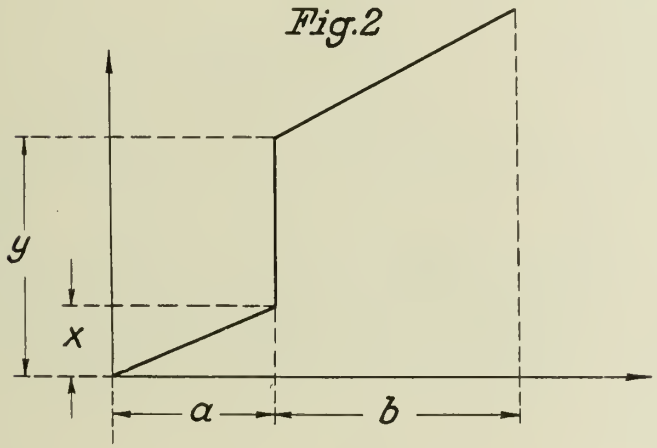


Fig. 3

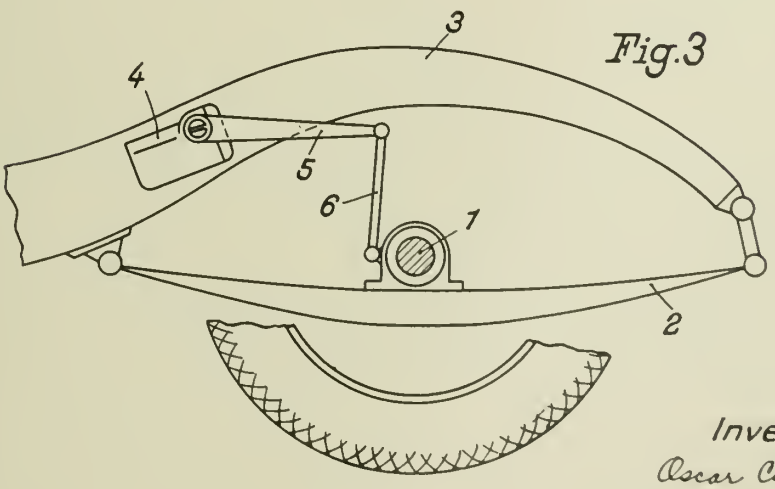


Inventor:
Oscar Cüppers
By
Watson, Cole, Grindle & Watson
Attys

PUBLISHED
MAY 18, 1943.
BY A. P. C.

O. CÜPPER
OSCILLATION ABSORBERS
Filed Nov. 10, 1939

Serial No.
303,885
4 Sheets-Sheet 2

Fig. 4

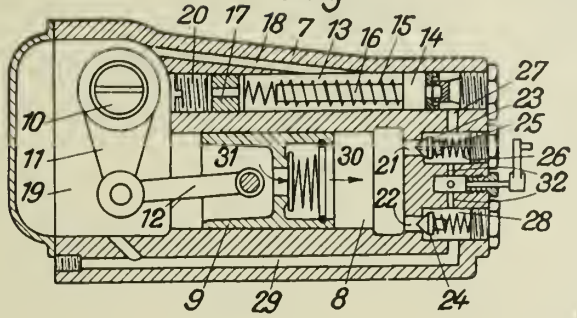


Fig. 6

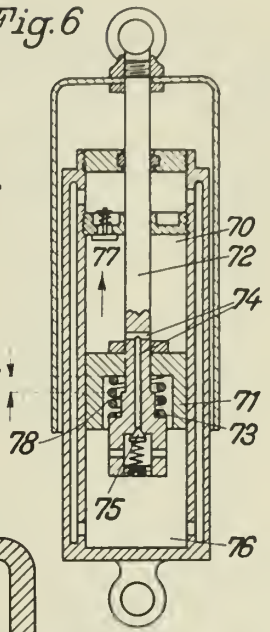


Fig. 5

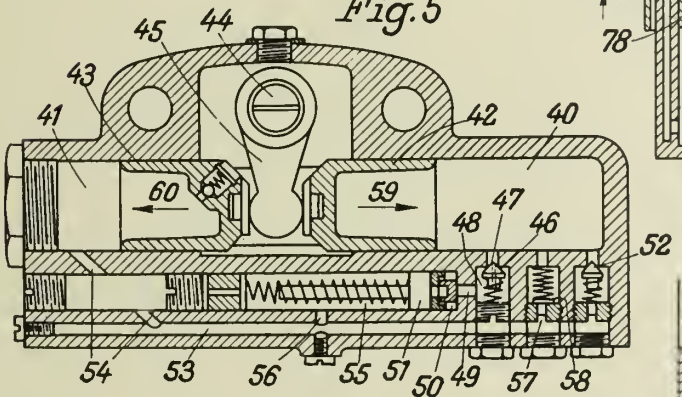


Fig. 7

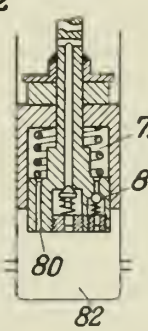


Fig. 8

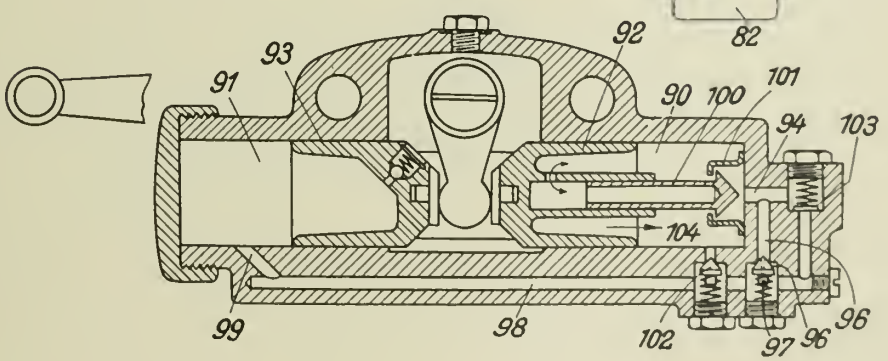


Inventor:
Oscar Cupper
By
Watson, Cole, Grindle & Watson
Attys

PUBLISHED
MAY 18, 1943.
BY A. P. C.

O. CÜPPER

OSCILLATION ABSORBERS

Filed Nov. 10, 1939

Serial No.
303,885

4 Sheets-Sheet 3

Fig. 9

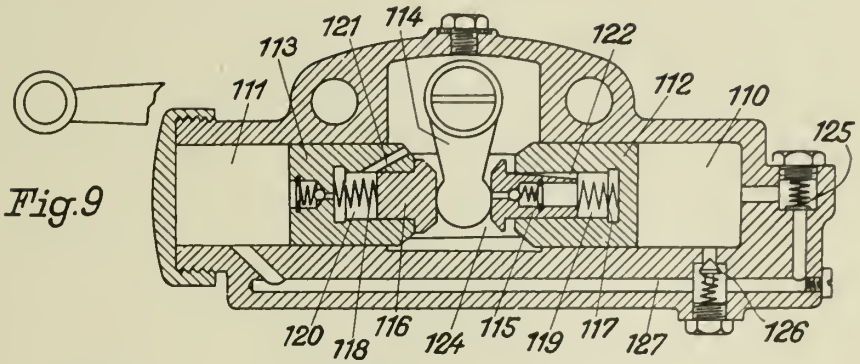


Fig. 10

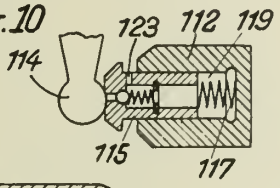


Fig. 11

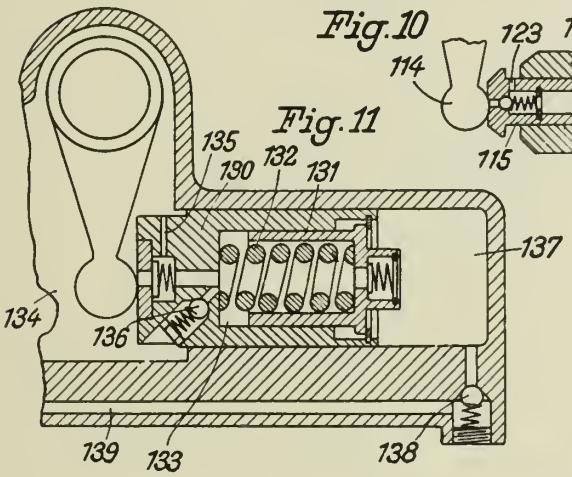


Fig. 15

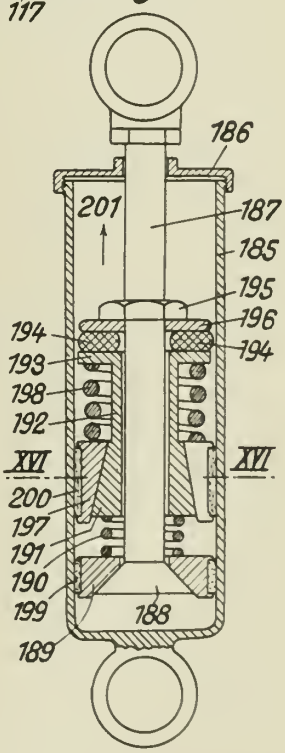


Fig. 12

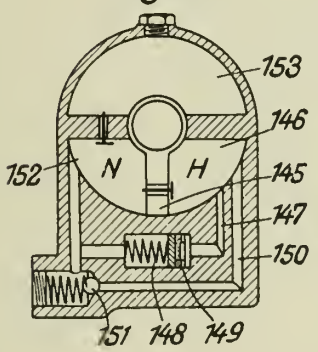


Fig. 16

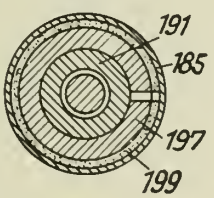


Inventor:
Oscar Cüpper
By
Watson, Cole, Grindle & Watson
Attys.

PUBLISHED
MAY 18, 1943.
BY A. P. C.

O. CÜPPER

OSCILLATION ABSORBERS

Filed Nov. 10, 1939

Serial No.
303,885
4 Sheets-Sheet 4

Fig. 13

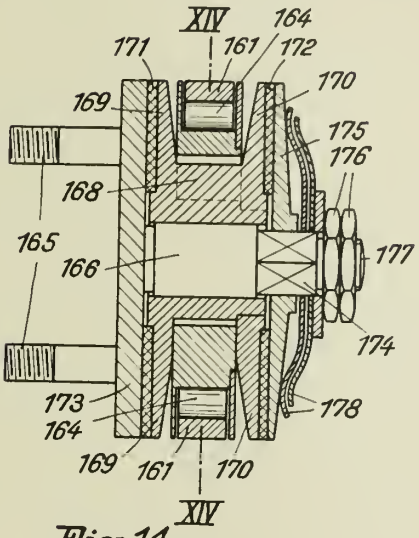


Fig. 14

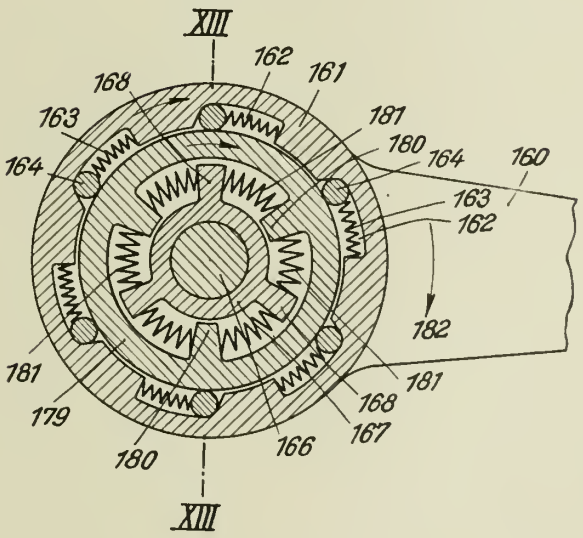


Inventor:
Oscar Cüpper
By
Watson, Cole, Grindle & Watson
Attys.

Published May 18, 1943 Serial No. 304,154

# ALIEN PROPERTY CUSTODIAN

## MAGNETIC SEPARATOR

Karl Sigwart, Leverkusen-I. G.-Werk, Germany;
vested in the Alien Property Custodian

Application filed November 13, 1939

The present invention relates to magnetic separators, and more particularly to such separators in which the material to be separated is delivered to a moving surface of unmagnetic material as for instance, a rotating drum or a conveyor-belt, and, at and near the point of delivery, is subjected to the action of a magnetic field which may be produced by a stationary electro-magnet. The unmagnetic constituents of the material pass this arrangement and fall off without being affected by the magnetic field. The magnetic particles adhere to the surface of the drum or belt and are carried out of and thereby removed from the material; when, by further rotation of the drum or belt, they have left the magnetic field, they finally drop off.

The hitherto known magnetic separators of this type have certain disadvantages. If the surface of the drum or belt is smooth, the magnetic particles, instead of leaving the magnetic field, often tend to glide on the surface and thereby to remain in the field. The same phenomenon can be observed inside the field, at such points or lines, where the intensity of the field varies suddenly because the drum or belt material is not homogeneous. Of course, this disadvantage is especially apparent when the strength of the magnetic field, in order to have a good separation, is increased as much as possible. It has been proposed to avoid this gliding of the material by arranging slightly protruding ribs on the moving surface vertically to the direction of its movement, or by roughening the surface. But thereby the deposition of a permanent layer of material on the surface of the belt or drum is facilitated, which cannot or only with great difficulty be removed therefrom by brushing or scrubbing. This layer, while smoothing the surface again, also diminishes the strength of the magnetic field. Moreover, unmagnetic particles may be carried across the magnetic field by the ribs, so that separation is bad.

It has also been proposed, in order to increase the efficiency of magnetic separators at strong magnetic fields, to arrange a great number of parallel bars of magnetic material on the surface of the smooth drum or belt, vertically to the direction of its movement. The distance between two such bars, however, was so small, that many particles, instead of leaving the magnetic field, were attracted by the next successive bar and thereby taken back into the field, so that they could not drop off from the belt or drum.

It is the object of this invention to avoid these disadvantages and to furnish a magnetic separator which, even at strong magnetic fields, will allow efficient and complete separation of magnetic and unmagnetic material.

In the following, the invention will be described as applied to a magnetic separator of the drum type. As above stated, such separators consist of a drum of unmagnetic material. Inside the drum there is placed a stationary magnet which, at and near the point at which the material is delivered to the surface of the drum, produces a strong magnetic field. According to my invention, the drum has a smooth surface, and is provided with one or at the most a few bars of magnetic material, especially iron, being preferably placed vertically to the direction of movement of the drum-surface. It is essential that, if several such bars are used, they are placed at such a distance that no appreciable magnetic flux is created between successive bars. Moreover, the bars should not protrude above or sink below the level of the surface. Therefore, the bars are arranged either flush with the surface of the drum, or, if they are placed below the surface, the gap is filled by unmagnetic material so that the surface remains smooth. The latter arrangement, although the magnetic field is weakened thereby, may sometimes be preferable, for instance, if the material to be separated tends to corrode the magnetic material of the bars. The bars may consist of iron-sheeting which is welded and/or riveted to the unmagnetic drum-material. Their breadth may be adapted to the size of the particles to be separated and to the dimensions of the drum. It was found that in the ordinary drums of 200 mms diameter, two bars placed opposite each other and having a breadth of about 25–30 mms give good results in almost every case, whereas in 400 mms drums, four such bars placed at right angles may be advantageously used. Drum and bar may be of equal thickness, for example 2–3 mms.

By the magnetizable bar or bars according to my invention, the magnetic flux is concentrated in a certain area of the surface of the drum during its passage across the magnetic field. Magnetic particles, therefore, are especially attracted in that area and are carried across and outside of the magnetic zone without gliding. It is possible, therefore, to apply very strong magnetic fields without diminishing the efficiency of the separator. Separation itself is very good because there are no protruding elements of the surface which might carry unmagnetic material across the field. Nor is there any weakening of the strength of the field by the formation of a per-

manent layer of material on the surface of the drum. And, last not least, these advantages are obtained with a drum which is as simple and inexpensive as possible.

It is self understood that my invention can be applied with the same result to other magnetic separators of similar type, for instance, to the belt separator in which a smooth conveyor-belt of unmagnetic material is used instead of a drum. A bar or bars of magnetizable material are placed in or beneath the surface of the belt, about parallel to each other and vertically to the direction of its movement. If several bars are used, their distance should be such as to prevent any appreciable magnetic flux between two successive bars which might draw back the material which is about to leave it, into the magnetic zone.

KARL SIGWART.

Published May 18, 1943 Serial No. 304,170

# ALIEN PROPERTY CUSTODIAN

## CONTROL CONDENSERS FOR ALTERNATING CURRENT CIRCUITS

Walter Kalbskopf, Nurnberg, Germany; vested in the Alien Property Custodian

Application filed November 13, 1939

The invention is concerned with means for controlling or tuning alternating current circuits and makes use of dry rectifiers of the kind comprising units or discs which are each composed of a base plate electrode, a semi-conductive layer, a blocking layer, and the second or so-called counter-electrode. The semi-conductive layer may be of selenium or copper oxide, for instance, the rectifiers being accordingly termed as selenium or copper oxide rectifiers.

Rectifiers of this type may be represented in well-known manner by a so-called equivalent or substitute circuit diagram which shows them to be in the nature of a circuit arrangement in which a capacity and a high-ohmic resistance are connected in parallel while a low-ohmic resistance is connected in series with these two. This capacity or condenser is constituted by the said semi-conductive layer, counter-electrode and blocking layer, the latter acting as a di-electric. The high-ohmic resistance connected in parallel with such condenser is the ohmic resistance of the blocking layer while the low-ohmic resistance connected in series with this condenser and said high-ohmic resistance is the resistance of the base plate electrode combined with the resistance of the semi-conductive layer and that of the counter-electrode.

The ohmic resistance of dry rectifiers is known to depend greatly upon voltage. The rectification effected by these devices resides in this special property.

Experiments have shown that also the capacity of the aforesaid rectifier units or discs varies in dependence on the intensity of the voltage applied to it.

In the accompanying drawing, Fig. 1 represents a curve which illustrates the capacity variation which a rectifier disc undergoes in dependence upon the continuous voltage applied to it. Fig. 2 is a diagram showing the circuit arrangement of one embodiment of the invention. Fig. 3 is a diagram that relates to a second embodiment thereof. Fig. 4 is a diagrammatic view of a unit or disc of rectifiers forming part of these embodiments.

From the curve represented in Fig. 1 it will be seen that the capacity of a rectifier disc decreases whenever a continuous voltage, applied to such disc in the choking direction, increases and that this capacity rises with the voltage, applied in the other or traversing direction, increasing. The capacity variation effected by a voltage applied in the traversing direction, however, is not suitable for technical purposes because with rising voltage the traversing resistance, located in parallel with the capacity, decreases to such extent as to practically short-circuit the condenser, the purely ohmic proportion of current thus being by far in preponderance of the capacitive one.

In the case of the choking direction, however, the capacity variation of a rectifier disc is different from the former, because in this case the resistance located in parallel with the capacity thereof is very great and hence the leakage angle of the triangle of currents very small.

The fact that the capacity of a rectifier disc is dependent upon the control voltage applied in the choking direction may be utilized for various purposes.

Arrangements as provided by the invention enable a continuous or stageless electric control or tuning of alternaitng current circuits and thus are a pendant to a stageless current control effected through influencing from without the inductance of a choke coil premagnetized by unidirectional currents, or are a pendant to controlling direct current circuits by means of an electron tube.

Fig. 2 illustrating an embodiment of the invention, shows a circuit supplied with alternating voltage, as indicated at U, and which contains a consuming device J of any kind. This circuit is associated with four rectifiers V1, V2, V3, V4 arranged in the well-known Graetz connection. The alternating current flows over the capacitance of these rectifiers. By means of a variable battery U' a continuous voltage is applied to the bridge connection of the rectifiers in a manner to be effective in the choking direction of these.

The rectifiers V1 to V4 have been represented in the drawing by symbols intended to express that it is not the valve effect of the rectifiers which is relied upon here but the capacitance thereof. By varying the control voltage U' the capacity of the rectifiers is varied, thus affecting the alternating current to be controlled. Raising the voltage U' causes the capacity of the rectifiers and hence the alternating current to be decreased, as will be obvious from Fig. 1.

If such an arrangement has to control alternating currents of low frequency, the capacitive impedance of the rectifiers being here relatively high as compared with the choking resistance, the control voltage U' should be higher than the alternating voltage U in order to prevent the rectifying effect from prevailing. In the case of voice frequency and high frequency, however, the capacitive impedance of the rectifiers is negligeable in view of the choking resistance, and

the voltage U′ may hence be smaller than the alternating voltage to be controlled. The bridge arrangement of the rectifiers shall prevent continuous currents from flowing into the alternating current circuit, and vice versa, because the respective junction points of the bridge are in this way given the same potential.

Fig. 3, representing a second embodiment of the invention, shows a rectifier V and a larger-sized ordinary condenser K, both included in the alternating current circuit to be controlled. By means of the variable battery U′ a continuous control voltage is applied to the rectifier V over a choke coil D. Coil D and condenser K here form an electric filter in order to prevent continuous currents from flowing into the alternating current circuit and equally to prevent alternating currents from entering the direct current circuit.

In this arrangement the alternating current is likewise controlled by varying the capacity of the rectifier V through a variation of the control voltage from battery U′.

According to Fig. 4 the rectifiers V1, V2, V3, V4, V comprise discs which are each composed of a base plate electrode 1, a semi-conductive layer 2, a blocking layer 3, and a counter-electrode 4. Layer 2 may be of selenium or copper oxide, for instance. Layer 3 may in well-known manner be arranged as a film of insulating material or may be produced by chemical reaction.

Control condensers as provided by the invention may be employed also in rectifier devices in a manner to control the alternating voltage in dependence upon the direct current load, this case being similar to a regulating choker being premagnetized from the direct current side.

Furthermore, the novel condensers may be employed in connection with voice frequency as well as high frequency circuits, such as those of voice buzzers and electronic transmitting tubes, in order to serve here as an electrically adjustable capacity for tuning oscillatory circuits. Also these condensers may be used in connection with remote control systems by which devices of this kind are controlled over lines.

The invention is not limited to the use of rectifiers but may be effected also with the aid of cells of the kind not possessed of a rectifying effect but having an intermediate layer which is equivalent to the blocking layer, such as layer 3, for instance, provided that the capacity of these cells can be varied by means of variable continuous voltage applied to them.

WALTER KALBSKOPF.

PUBLISHED
MAY 18, 1943.
BY A. P. C.

W. KALBSKOPF

CONTROL CONDENSERS FOR ALTERNATING CURRENT CIRCUITS

Filed Nov. 13, 1939

Serial No. 304,170

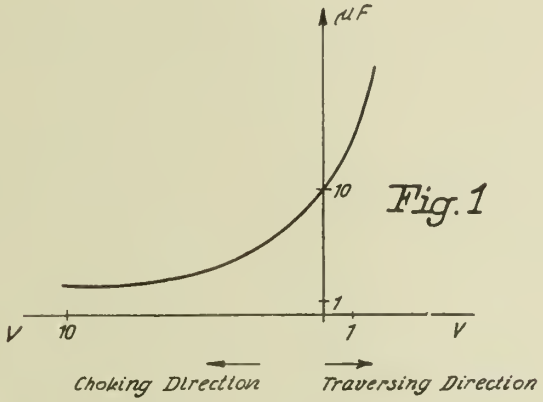


Fig. 1

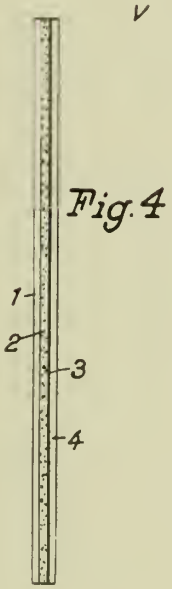


Fig. 4

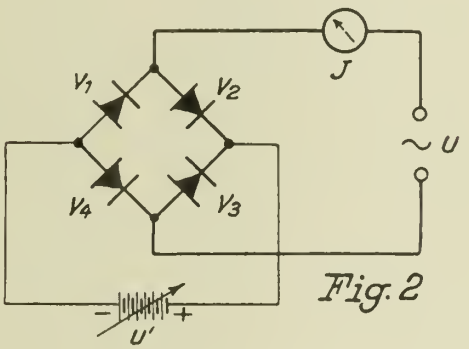


Fig. 2

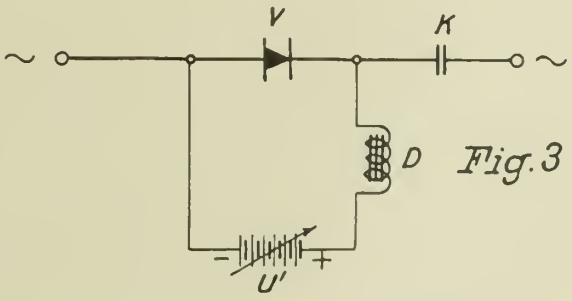


Fig. 3

Inventor:
Walter Kalbskopf
by E. W. Kinnicutt
Att'y

Published May 18, 1943 Serial No. 305,883

# ALIEN PROPERTY CUSTODIAN

## ELECTRIC LAMPS

Anton Kratky, Vienna XV, Germany; vested in the Alien Property Custodian

Application filed November 24, 1939

The present invention relates to electric lamps for illuminating or therapeutic purposes, the object being to provide a lamp wherein a metallic filament in liquid form during the operation of the lamp, constitutes the principal light source of the lamp or the principal source of radiant energy.

In the accompanying drawings Figure 1 is a sectional view of one illustrative embodiment of the invention in semi-diagrammatic form, and Figure 2 is a similar sectional view of another embodiment of the invention, the section of each view being through the vertical axis of the lamp and mounting.

Referring to Figure 1, a transparent lamp body 1 which may be generally conical in shape is provided with an annular groove 2 at the point of greatest diameter which, if the lamp is used in a vertical position, will coincide with the base of the lamp body. The bottom 3 of the lamp body is domed slightly and at one point in the groove 2 a barrier 4 may be formed as shown. The groove 2 is adapted to receive a body of a metal, or of an alloy of metals, which will be liquid at all times, or which will easily become liquid during operation of the lamp. For example, the groove may contain a body of mercury, sodium or potassium, or a suitable alloy of these or similar metals. In the further description of the invention it will be assumed that mercury is employed and that other suitable metals may be substituted therefor.

The lamp body may be provided with the usual threaded shell 5 attached to the transparent material of the lamp body by non-conducting cement 6 which also carries a terminal 7 to which one of the wires 8 of the lamp circuit is attached, the other wire 9 being attached to the shell 5. The two wires 8 and 9 may extend into the lamp body through a tube 10 lying along one wall of the lamp body and terminating near the groove 2, the said wires projecting through the end of this tube to form terminals 8′ and 9′ extending into the groove 2. If the barrier 4 is used the terminals 8′ and 9′ will be positioned as shown, one on each side of the barrier 4 where they dip into a body of mercury 11 carried in this groove. Where the wires 8 and 9 pass through the end of the tube 10 they are sealed in the usual manner. In case the barrier 4 is omitted the terminals 8′ and 9′ should be arranged to dip into the mercury at substantially diametrically opposed points in the ring of mercury. If desired in connection with the arrangement shown in Figure 1, a high resistance wire 12 of tungsten or other suitable material may be placed in the groove and connected at its ends with the terminals 8′ and 9′ in order to form a closed circuit as an auxiliary conductor.

The interior of the lamp body may be evacuated or may be filled with a reducing or neutral gas at relatively low pressure. For this pressure hydrogen or nitrogen may be used and if it is desired to modify the color of the light neon, argon or krypton inividually or in suitable combinations may be used.

Assuming that the lamp is to be operated in the vertical position shown in Figure 1 and that a suitable direct or alternating current is supplied through the wires 8 and 9, the mercury within the groove 2 will become very highly heated. When the temperature has been increased sufficiently mercury will vaporize and mercury vapor will tend to fill the interior of the lamp body. The vaporization of mercury will diminish the supply of mercury in the groove 2, thus increasing the resistance in the lamp circuit. As the mass of liquid mercury decreases it will tend to divide itself into separate particles and a number of minute arcs may be formed between adjacent particles. The high resistance wire 12 when used will prevent the electrical circuit from becoming entirely broken.

In order to prevent undesirable fluctuations in the lamp circuit, should they occur, a line series resistance or ballast may be connected into the lamp circuit exteriorly of the lamp.

According to the present invention the liquid metallic filament is maintained or restored continuously by the condensation of the mercury vapor upon the conical sides of the lamp body and by returning the liquid mercury to the groove 2. Thus the supply of mercury in this groove is replenished and maintained so that the electrical circuit through the mercury is not completely interrupted.

As will later be described, means are provided to facilitate the condensation of mercury vapor by conducting heat away from the lamp body, particularly from the upper conical part. The cycle of operation consisting of the vaporization of the mercury and the condensation and return thereof to the groove, prevents the building up of unduly high pressure within the lamp body.

The lamp body may be of glass having a melt-

ing point of about 1000° C., or quartz glass having a melting point of about 1500° C., and in order to protect the material of the lamp body from the high temperature developed in the groove 2 this groove may be provided with a lining 2' of an oxide having a still higher melting point such, for example, as magnesia or thorium oxide.

The means above referred to for cooling the upper part of the lamp body may consist of a conical shell 15 lying in close proximity to the walls of the lamp body and adapted to receive heat therefrom. This heat may be absorbed by a cooling fluid circulating within a chamber 16 and supplied thereto by a tube 17 and carried away by a tube 18 or may be radiated to the surrounding air by a number of fins 19 attached to the shell 15 or by both.

The shell 15 is conveniently formed as a part of or attached to a supporting member 20 in which an internally threaded socket 21 is mounted and separated from the supporting member 20 by an insulating member 22, which in turn carries a contact member 23, the socket 21 and the contact member 23 constituting terminals for the lead wires 21' and 23', which when the lamp is in place connect respectively with the wires 9 and 8.

When in operation in a vertical position as shown in the drawings, gravity may be relied upon to return the condensed mercury vapor to the groove 2, but if the lamp is to be operated in any other position or if it is not desired to rely entirely upon the force of gravity to return the condensed mercury to the groove 2, the entire lamp body and its mounting may be rotated so that centrifugal force will act to return the condensed mercury vapor rapidly to the groove 2 in the lamp body.

For this purpose the lamp mounting 20 may be carried upon a shaft 25 journaled in a fixed member 26 and arranged for rotation in any suitable manner as by a motor M carrying a pulley 27 which is connected by belt 28 with a belt groove 29 formed in the mounting 20.

In order to effect an electrical connection between the conductors of the rotatable mounting 20 and fixed member 26, the mounting 20 may be provided with commutator rings 30 and 31 against which brushes 32 and 33 are arranged to bear. These brushes 32 and 33 may be connected to a suitable source of electrical energy, either alternating or direct current at suitable potential, which may be 110 or 220 volts either direct or alternating current.

If it is desired to operate the lamp upon a three-phase alternating current a third lead, brush, commutator ring and lead-in wire may be provided in a readily understood manner, and in such case three terminals, instead of the two terminals, 8' and 9' as shown, will be positioned equi distant from each other in the groove 2 of the lamp body.

In order to supply a cooling fluid to the cooling chamber 16 when the lamp housing is rotated, the tubes 17 and 18 may be extended through the shaft 25 and arranged to open into channels 35 and 36 formed in the member 26, these channels being in turn connected through passages 37 and 38 with a suitable source of cooling fluid which may be caused to circulate through the cooling system in any suitable manner as by a pump or by gravity.

The radiant energy developed within the lamp body may be used alone or partly or entirely for the stimulation of a florescent coating which in turn will then produce desirable light rays. For this purpose the lamp body may be provided at suitable places, for example, upon the outside of the conical section, with a florescent film or coating 39 of known material. A suitable florescent coating may consist of one part each of beryllium oxide, zinc oxide, and silicon dioxide with which there is incorporated $\frac{5}{16}$ of 1% of thorium oxide.

The modification of the invention shown in Figure 2 operates upon the same principle and in much the same manner as the form of the invention shown in Figure 1, except for the fact that the heating of the liquid metallic filament within the lamp body is effected by an electrical current induced therein by a coil located in close proximity thereto.

Referring to Figure 2, a lamp body 40 generally frustro conical in shape, is provided and a circular groove or channel 41 formed at the lower and outer edge. An axial passage 42 may be provided through the lamp body for a mounting member 43 which, as shown, is adapted to be fastened to the shaft of a motor M.

Means are provided adjacent the upper part of the lamp body for conducting away heat and may conveniently take the form of a metallic shell 44 provided with heat radiating fins 45. The lamp may be held on the mounting member 43 in any convenient manner as by a nut 46 threaded on the mounting member 43 and the mounting member 43 may be suitably keyed or fastened to the shaft of the motor as by a set screw 47.

If it is desired to use this lamp in the vertical position as shown, the force of gravity may be relied upon to return the condensed mercury vapor to channel 41, as previously explained in connection with Figure 1, but if it is desired to augment gravity by centrifugal force or if the lamp is to be operated in any position other than the one shown, it may be rotated upon the shaft of the motor M.

The heating of the liquid metallic filament 50 within the groove 41 is effected according to well known principles by placing in close proximity to the lamp a coil 51 through which a suitable alternating current is passed to induce a current in the ring of mercury, or other suitable metal, lying in the groove 41 within the lamp body 40. The coil 51 may be so designed and energized as to induce within the liquid metallic filament a current of relatively low voltage, say from 10 to 20 volts, but of an amperage sufficiently high to heat the mercury beyond the vaporization point. This arrangement will permit the use within the groove 41 of a mercury filament of greater cross sectional diameter and of the generation of a greater light output for the lamp than in the arrangement illustrated in Figure 1. As previously described, the lamp body may be coated with a florescent material and the groove 41 may be filled with suitable metals other than mercury.

In lamps constructed in accordance with the present invention it is possible to obtain very high temperatures approaching 2900° C. instead of the maximum temperature hitherto possible in the neighborhood of 2200° C. Inasmuch as the light rays emitted do not, in accordance with well known laws, increase proportionately with the temperature but according to the fourth power of the temperature, very considerable economy and efficiency will be secured by lamps made according to the present invention.

The utilization of metals in liquid form as the

filament of a lamp in accordance with the present invention, permits the heating of the filament to a point not hitherto attained. The degree of heat which may be imparted to solid metallic filaments is limited by the temperatures at which such filaments will soften, melt or vaporize, the maximum filament temperature possible in such lamps ranging from 2000 to 2400° C. Where an electrical current is passed through vaporized metal less light will be generated than when the same current is passed through the same metal in a solid or liquid state. According to the present invention the metallic filament in liquid form may be heated above its vaporizing temperature and maintained at a very high temperature because the vaporized metal is continuously condensed and returned to its liquid form and again becomes a part of the electrical circuit.

ANTON KRATKY.

PUBLISHED
MAY 18, 1943.
BY A. P. C.

A. KRATKY

ELECTRIC LAMPS

Filed Nov. 24, 1939

Serial No.
305,883

2 Sheets-Sheet 1

Fig. 1.

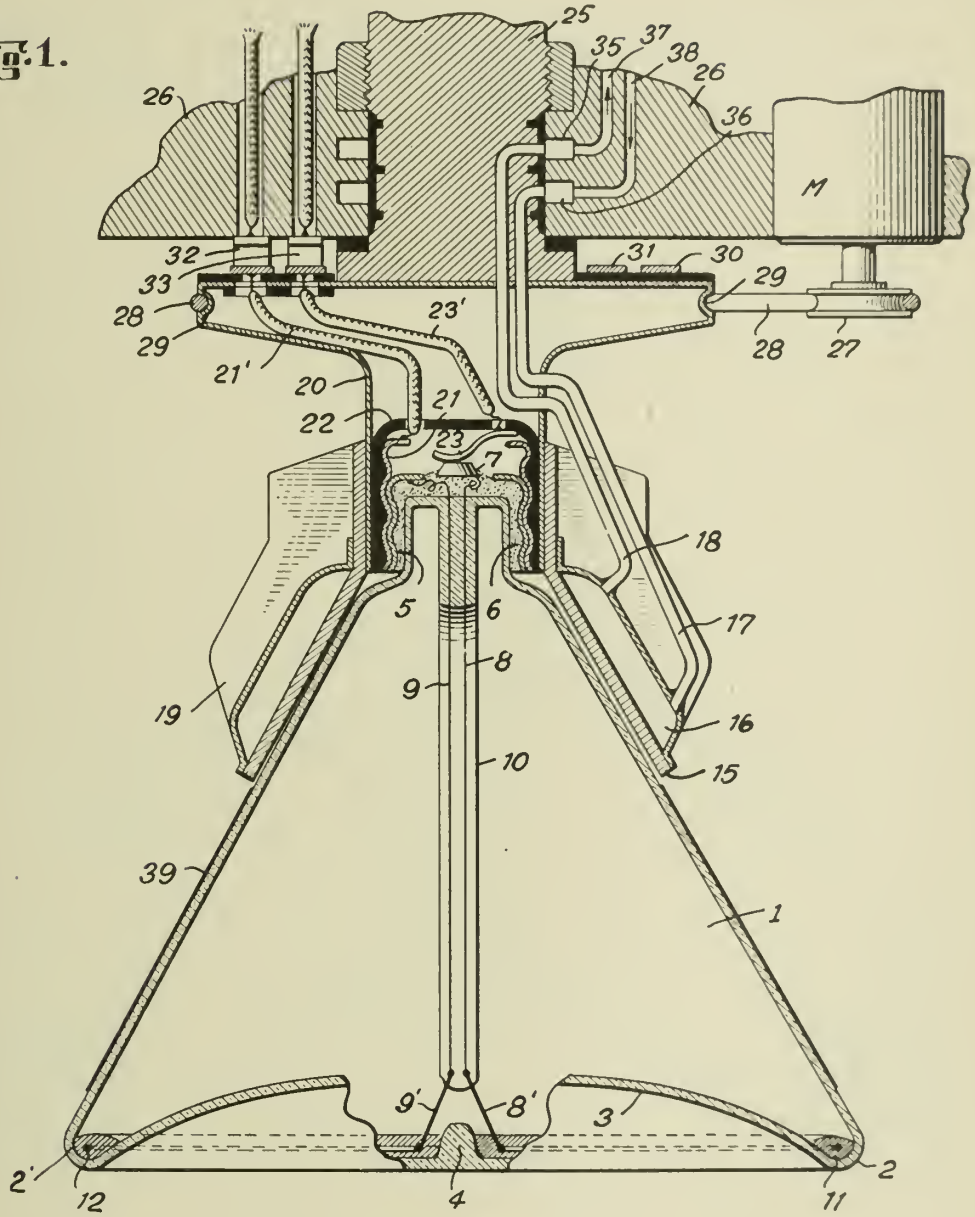


INVENTOR

Anton Kratky

BY

ATTORNEY

PUBLISHED
MAY 18, 1943.
BY A. P. C.

A. KRATKY

ELECTRIC LAMPS

Filed Nov. 24, 1939

Serial No.
305,883

2 Sheets-Sheet 2

Fig. 2.

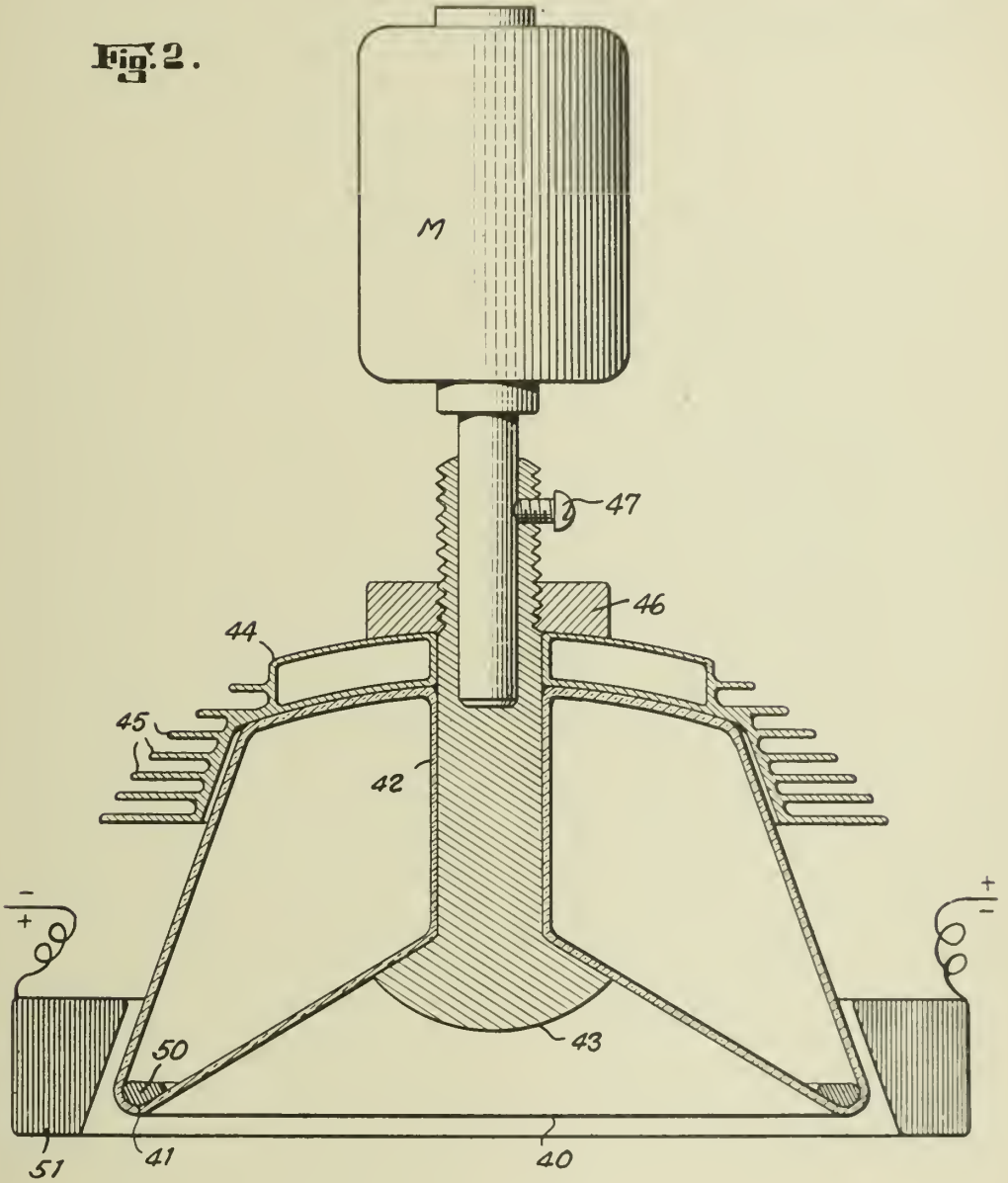


INVENTOR
Anton Kratky
BY
Young Quigg Thurston & Dis
ATTORNEY

Published May 18, 1943

Serial No. 305,982

# ALIEN PROPERTY CUSTODIAN

## OZONIZERS

Shozo Tsuno, Kobe-shi, Japan; vested in the Alien Property Custodian

Application filed November 24, 1939

This invention relates to improvements in ozonizers, and has for its object to provide an ozonizer, simple and compact in construction, and efficient in operation.

In the accompanying drawings;

Fig. 1 is a perspective view of an ozonizer according to the invention with a battery connected thereto;

Fig. 2 is a vertical sectional view of the ozonizer shown in Fig. 1 in larger scale with the battery connected thereto; and

Fig. 3 is a cross sectional view on line III—III of Fig. 2.

Referring to the drawings, 1 represents a casing provided with an intermediate partition 2 and a bottom 3 to form an upper chamber 4 and a lower chamber 5. The casing is also formed with a number of perforations 6 and 7 in the side of the upper and lower chambers respectively. The partition and the bottom are made of an insulating material, such as ebonite, Bakelite or the like. A cylinder 8 of aluminum is securely mounted in the upper chamber 4 on the partition 2, which is painted with a paint non-corrosive for aluminum and is coated with a surrounding mica cylinder which in turn is coated with a surrounding cylinder 10 made of nickeled brass wire network. A silver wire 11 is arranged around the outer cylinder 10. A base 12 of an insulating material is securely mounted in the lower chamber 5 at a suitable distance from the bottom 3 by means of supports 13 secured on the said bottom.

An induction coil 14 is securely mounted in the lower chamber 5 on the base 12, of which the core and primary and secondary coils are indicated at 15, 16 and 17 respectively. A spring 18 is at one end secured on the underside of the base 12 by means of a distance piece 19 and a screw 20, the free end of the spring carrying an armature 21 and a contact piece 22. Another spring 23 substantially of a U-shape is at its one arm secured to the bottom 3 by means of a bolt 24 and a nut 25, the other arm carrying a contact piece 26 and being adjustable by means of an adjusting screw 27 passing through a threaded hole 28 of the bolt 24 to adjust the gap between the contact pieces 22 and 26.

The primary coil 16 is at one end connected to the positive terminal of a source of electricity, such as a battery 29 through a conductor 30, the contact piece 22, the gap between the contact pieces 22 and 26, the contact piece 26, the spring 23, conductors 31 and 32, a switch 33 and a conductor 34, the other end being connected to the negative terminal of the battery by a conductor 38. A condenser 36 is inserted between and across the conductors 30 and 32. The secondary coil 17 is at one end connected to the aluminum cylinder 8 by a conductor 37, the other end being connected to the silver wire 11 by a conductor 35. A container 39 of a meshwork for perfumery is put on the top of the casing 1.

In operation, the switch 33 is closed, and then a current of high voltage is generated in the secondary coil by induction, which produces an electric discharge between the cylinder 10 of brass wire network forming a positive electrode and the aluminum cylinder 8 forming a negative electrode, whereby ozone is continuously produced and diffused through the perfumery container 39 of a meshwork on the top of the casing 1 and the perforations 6 in the upper chamber 4. The perforations 7 in the lower chamber 5 provide the passages for circulation of cooling air in the lower chamber 5 enclosing the induction coil 14.

It will be understood that the casing 1 may be formed to two separate ones, one corresponding to the upper chamber 4 and the other the lower chamber 5, within the scope of the invention.

SHOZO TSUNO.

PUBLISHED
MAY 18, 1943.
BY A. P. C.

S. TSUNO
OZONIZERS
Filed Nov. 24, 1939

Serial No.
305,982

Fig. 1.

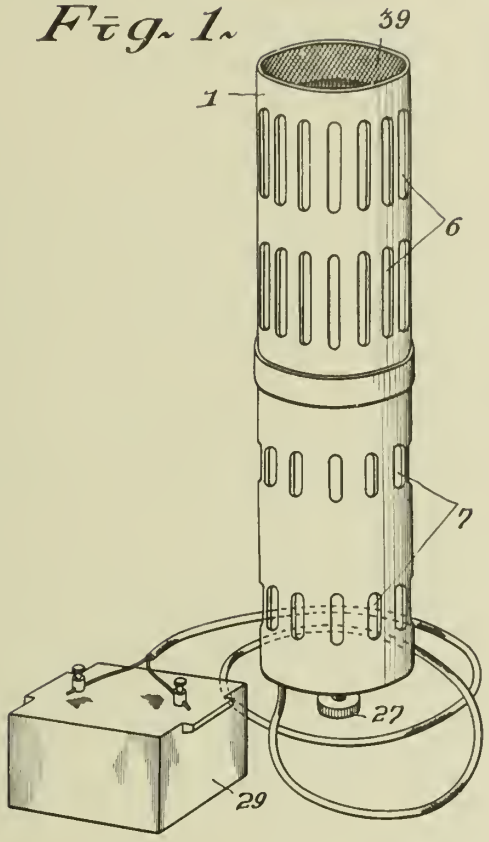


Fig. 2.

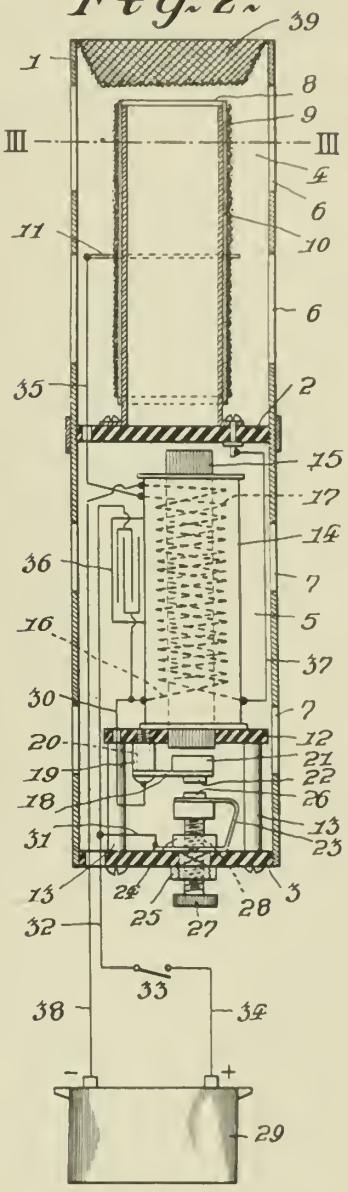


Fig. 3.

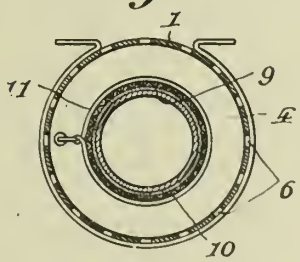


INVENTOR,
S. Tsuno

BY:
Glascock Downing & Seebold

ATTORNEYS.

Published May 18, 1943 Serial No. 305,991

# ALIEN PROPERTY CUSTODIAN

## ELECTROMAGNETIC MULTIPLE-DISC CLUTCH

Anton Ryba, Bolzano, Italy; vested in the Alien Property Custodian

Application filed November 24, 1939

The present invention relates to electromagnetic multiple-disc clutches as used in change speed gears of power driven vehicles.

As clutches of this kind must have a very high specific efficiency the friction discs must perfectly bear against each other upon their entire surface and the magnetic circuit must be closed without intervening air spaces.

The object of the invention which is a part continuation of my pending U. S. application Ser. No. 176,339 filed November 24, 1937, for "Electromagnetic multiple-disc clutch" is to provide an electromagnetic multiple-disc clutch which to a high degree fulfills all the above mentioned conditions.

To this purpose the armature serving as the return path for the magnetic flux instead of consisting of a single plate is composed of a plurality of flexible discs which yield upon the action of a magnetic force so that the armature bears with uniform pressure against both pole surfaces, but it is commendable that the friction discs have radial slits in order to prevent tensions in consequence of heat, so that the inner and the outer parts of the discs are able to extend freely, and not arise deformations from the heat, resulting in a uniform loading of the entire friction surface of the discs.

In the accompanying drawings some constructions of clutches according to the invention are shown by way of example.

In these drawings:

Fig. 1 shows a longitudinal section through a clutch in which the magnetic flux twice traverses the set of discs,

Fig. 2 shows a longitudinal section through a clutch in which the armature discs simultaneously serve as friction surfaces,

Fig. 3 shows an elevation of an armature disc having slots to increase the flexibility,

Figs. 4 and 5 show an inner and an outer friction disc with radial slits in order to compensate extensions of heat.

As shown in the drawings a gear wheel 5 is rotatably mounted upon a shaft 8. An electromagnet 1 is according to Figs. 1 and 2 fixed to the shaft 8 and the gear wheel 5 respectively and in its annular space carries the exciting coil 2 the two terminals of which are connected to mass on the one hand and to a slip-ring 3 on the other hand. The latter is pressed upon the electromagnet 1 and an insulating layer 4 is arranged between the ring 3 and the electromagnet 1. Connected to the latter is also a ring 12 provided with claws 12*a* into which engage the outer discs 10. In Fig. 1 the gear wheel 5 is provided with an elongated hub having notches into which engage the inner discs 9. According to the construction showns in Figs. 2 and 3 the inner discs 9 engage into a notched hard sleeve 7. The armature 6 consists of a plurality of thin flexible discs which, as hown in Fig. 3, may be provided with slots 6*a*, 6*b* to increase their flexibility. The armature discs may either all be connected to one and the same clutch member or with none of the clutch members or alternately with both clutch members. With the exception of the last mentioned case the armature discs may be connected at suitable points, for instance as shown in Fig. 1 by rivets 11. Such connection, however, must be as not to impair the flexibility of the discs.

Fig. 4 shows an outer disc with slits in the inner ring.

Fig. 5 shows an inner disc with slits in the outer ring. By this means are prevented tensions of heat, because the parts of the rings are able to extend. The number of the slits is free.

When the circuit is closed a magnetic field is produced in the sense of the dotted line under the action of which the flexible armature discs perfectly uniformly bear against the set of friction discs and thereby warrant a uniform bearing of same at iron closed magnetic circuit.

ANTON RYBA.

PUBLISHED
MAY 18, 1943.
BY A. P. C.

A. RYBA

ELECTROMAGNETIC MULTIPLE-DISC CLUTCH

Filed Nov. 24, 1939

Serial No.
305,991

2 Sheets-Sheet 1

- Fig. 1 -

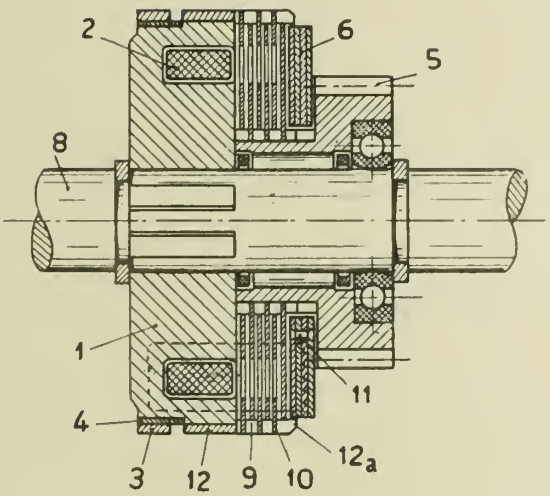


- Fig. 2 -

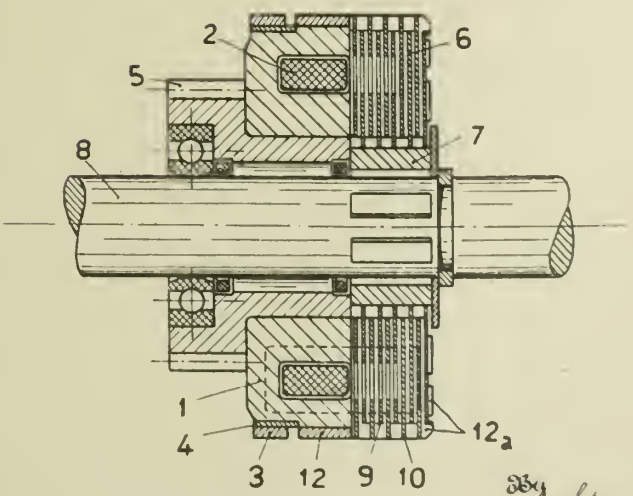


Inventor
Anton Ryba

By Strauch & Hoffman
Attorneys

PUBLISHED
MAY 18, 1943.
BY A. P. C.

A. RYBA

ELECTROMAGNETIC MULTIPLE-DISC CLUTCH

Filed Nov. 24, 1939

Serial No.
305,991

2 Sheets-Sheet 2

- Fig. 3 -

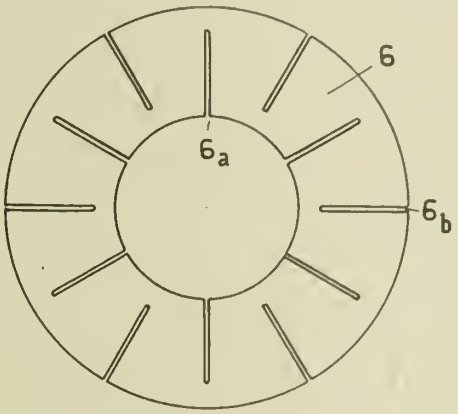


- Fig. 4 -

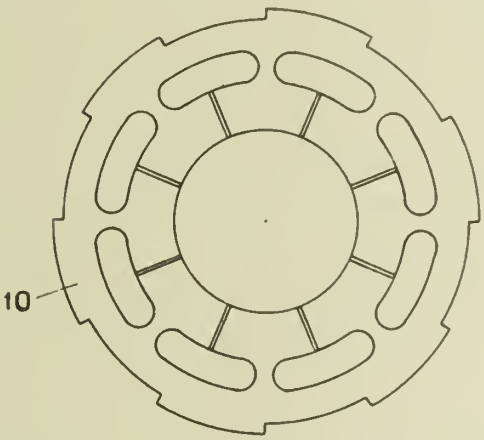


- Fig. 5 -

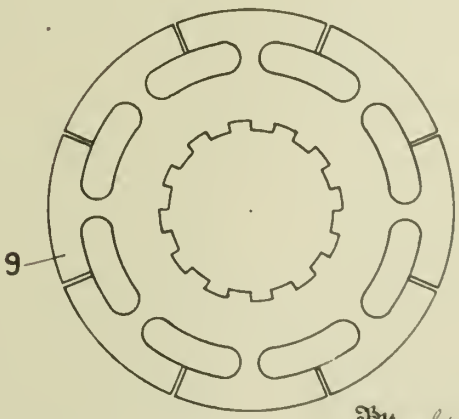


Inventor
Anton Ryba

By Strauch & Hoffman
Attorneys

Published May 18, 1943 Serial No. 306,390

# ALIEN PROPERTY CUSTODIAN

## DRIVE MECHANISM FOR OFFICE MACHINES

Erich Dronigke, Sommerda, and Hugo Schüler, Siegmar-Schonau, Germany; vested in the Alien Property Custodian

Application filed November 27, 1939

This invention relates to drive mechanism for office machines especially typewriters and calculating typewriters, of the kind in which the parts to be driven are actuated by cam discs which can be coupled by means of controllable connections with a rotary shaft for a limited rotational movement of the latter. Such drive mechanisms serve for the power actuation of driven parts, for example, type carriers, calculating means, shift devices, setting up means, control shafts, and other elements of such machines.

The object of the invention is to provide a reliable drive mechanism of the above kind which is simple, compact, cheap to manufacture, rapid and certain in operation, and of great durability. According to the present invention each cam disc is provided with a plurality of coupling connections which rotate with the disc and are subject to a common control.

A machine embodying the invention is illustrated in the accompanying drawings by way of example. In these drawings:

Figure 1 is an elevation partly in section of a typewriter having a drive unit of the mechanism according to the invention, the parts being shown in position of rest,

Fig. 2 is a similar view of a drive unit of the mechanism with a key depressed,

Fig. 3 is a plan view of a plurality of drive units, taken on the line 3—3 of Fig. 1, and in which some of the members of some of the drive units are omitted for sake of clearness,

Fig. 4 is an elevational view of a drive unit showing the driven parts in operative position, and

Fig. 5 is an elevational view of a drive unit in uncoupled position with the key held depressed.

The machine illustrated comprises a frame 1 in which a shaft 2 is mounted capable of rotation, by means not shown, said shaft being driven from a source of power, also not shown, and being in constant rotation when the machine is in working condition. Each unit of the drive mechanism comprises a cam disc 3 loosely mounted on the shaft 2 and which can be coupled to a gear wheel 4 fixed on the shaft 2. This coupling of the cam disc 3 is effected by a plurality, preferably two, coupling connections 5, 5' which are separately pivoted to the cam disc 3 and which are operatively connected by means of a common transmission member which in this instance is a plate 6 which can turn loosely on a hub 4' of the gear wheel 4, Fig. 1.

Control of engagement of the coupling connections 5, 5' is effected by means of a key lever 10 having a forked end serving as a control member 9 provided with control elements 7, 8. When the key lever 10 is rotated about its pivot 12 in clockwise direction, Fig. 1, against the action of a tension spring 13 attached to the control member 9, which action is effected by depressing a key 11, the control element 7 releases a contact lug 14 of a stop lever 15, which moves along with the coupling connection 5, Fig. 2. As a result of this release the coupling connection 5, under the action of a spring 18 attached to the shank portion 17 of the connection, is rocked in counter-clockwise direction, Fig. 2, about its pivot 16 on the cam disc 3, whereby a drive tooth 19 on the shank portion 17 engages the gear wheel 4. The stop lever 15 associated with the coupling connection 5 is guided in the plate 6 by means of a pin 20. A similar stop lever 15' moving with the coupling connection 5' is similarly guided in the plate 6 by means of a pin 20', so that the rocking of the coupling connection 5 is transmitted through the plate 6 to the coupling connection 5' whereby the latter is rocked in counter-clockwise direction, Fig. 2, about its pivot 16' on the cam disc 3. In this manner, with the aid of a tension spring 18' attached to the shank portion 17', a drive tooth 19' on said shank portion is also brought into engagement with the gear wheel 4. The plate 6 is provided with guide slots 46 cooperating with pins 47 on the cam disc 3.

A key lock arranged on a guide comb 21 for the key levers 7 and consisting of rollers 22 movable in a casing 23, prevents the simultaneous operation of more than one key, since the depressed key completely fills the gap between the rollers 22 which corresponds to the thickness of a key lever 10.

By means of this coupling of the cam disc 3 to the shaft 2 rotating in clockwise direction, the cam disc 3 is set in rotation. As a result a roller 25 rotatably mounted on the lever 24 and cooperating with cam curves 45, 45' of the cam disc 3 causes the lever 24 to rotate counter-clockwise about its pivot 12, from the position of Fig. 2 into the position of Fig. 4. The lever 24 is forked at its left-hand end and one fork arm 26 is provided with an adjustable stop member 27 cooperating with a stop member 28 arranged on the machine frame. The stop member 27 has a contact plate 29 of leather or other noise damping material. The other arm 30 of the forked left-hand end of the lever 24 is jointedly connected to a tension unit 34 composed of two links 31, 32, and a tension spring 33. The links 31, 32 are so connected to each other and with the tension

spring 33 that they permit variation in length of the tension unit 34 due to the yielding of the spring 33.

The link 31 of the tension unit 34 is jointed by means of a pin 38 to a lever 37 which can rotate clockwise about a fixed pivot 35 against the action of a compression spring 36. This lever 37 in its movement actuates through the agency of a bell crank lever 39 a type lever 40, and also actuates through an adjustable link 41, a calculating mechanism 42. By these means a digit corresponding to that of the pressed key 11 is printed on the platen 43 and also the calculating mechanism 42 transmits the digital amount to a numeral wheel of an accumulator, not shown.

On further rotation of the cam disc 3 in clockwise direction out of the position shown in Fig. 4, the lever 24 turns backwardly about its pivot 12 in clockwise direction corresponding to the movement of its roller 25 upon the cam disc 3. The return movement of the lever 24 also brings the parts 34, 37, 39, 40, 41 driven thereby into their initial position, under the action of the compression spring 36 attached to the lever 37, Figs. 1 and 2.

The cam disc 3 remains coupled to the gear wheel 4 until one of the coupling connections, in the present case the connection 5', encounters with its contact lug 14' the control element 7 and is thereby rotated in clockwise direction about its pivot 16'. This movement is limited by a pin 44'. Consequently the drive tooth 19', and by the action of the plate 6 also the drive tooth 19, come out of engagement with the gear wheel 4 whereby the cam disc 3 comes to rest.

At the instant of disengagement of the coupling connections 5, 5' from the gear wheel 4, the roller 25 on the lever 24 is held by the spring 36 in one of the two notches 45, 45' provided in the cam disc 3, in the present case in the notch 45', so that the cam disc 3 is held in this position of rest.

Owing to the relatively high speed of rotation of the shaft 2 and of the cam disc 3, the roller 25 jumps from its outermost operative position, Fig. 4, right into the next notch 45'. Thereby the lever 24 is arrested by means of the adjustable contact member 27 on its fork arm 26 engaging the fixed stop 28, and the blow which would result from such a jump does not take place between the roller 25 and the notch 45', but between the contact member 27 with its leather shock absorbing plate 29 and the stop member 28 on the machine frame 1.

On actuating a key it will be seen that coupling between one of the cam discs 3 and the rotating shaft 2 is effected so that the cam disc 3 in question takes part in the rotation of the shaft 2. If the operated key is retained in depressed condition, Fig. 5, then the control element 8 of the control member 9 of the actuated key lever 10 remains in the path of the rotating contact lug 14 on the coupling connection 5. The lug 14 encounters in its path the control element 8 and effects a disengagement of the coupling connection 5 and also of the coupling connection 5' connected thereto through the plate 6. Consequently even when the key is held down disconnection of the cam disc 3 from the gear wheel 4 takes place. In this manner independently of the time taken to operate a key, only one operation of the drive mechanism takes place.

As soon as the depressed key is released the control element 8 rocks out of the path of movement of the contact lug 14 whereby under the action of the springs 18, 18' the coupling connections 5, 5' again establish driving connection between the cam disc 3 and the gear wheel 4. The cam disc 3 upon release of the key will therefore perform a short further rotation until the contact lug 14' encounters the control element 7 and again effects uncoupling of the connections 5, 5', whereby the cam disc 3 finally comes to rest.

The mechanism may also be so constructed, for example by suitable formation of the cam disc 3, that in the position of Fig. 5 with the key held down, the roller 25 will stand just at the highest point of the cam curve 46 and will then remain in this position as long as the key is held down. This result can be obtained for example by suitably extending the cam curve 46. Return movement of the roller 25 and lever 24 and also the engagement of the roller 25 in the notch 45', would then take place only after release of the key. This modification is suitable for example in the case of shift mechanisms for instance for case shifting of the type segments, or platen shifts, in which instances the position of the driven member must be maintained for a definite interval, namely, the time of key depression.

In the example of an embodiment of the invention herein described and illustrated the cam disc 3 is shown with two cam curves and two coupling connections 5, 5' and each working operation extends through a half rotation of the shaft 2. Obviously the cam disc 3 may have more than two cam curves and more than two connecting members 5 without departing from the scope of the invention.

ERICH DRONIGKE.
HUGO SCHÜLER.

PUBLISHED
MAY 18, 1943
BY A. P. C.

E. DRONIGKE ET AL

DRIVE MECHANISM FOR OFFICE MACHINES

Filed Nov. 27, 1939

Serial No.
306,390
4 Sheets-Sheet 1

Fig. 1

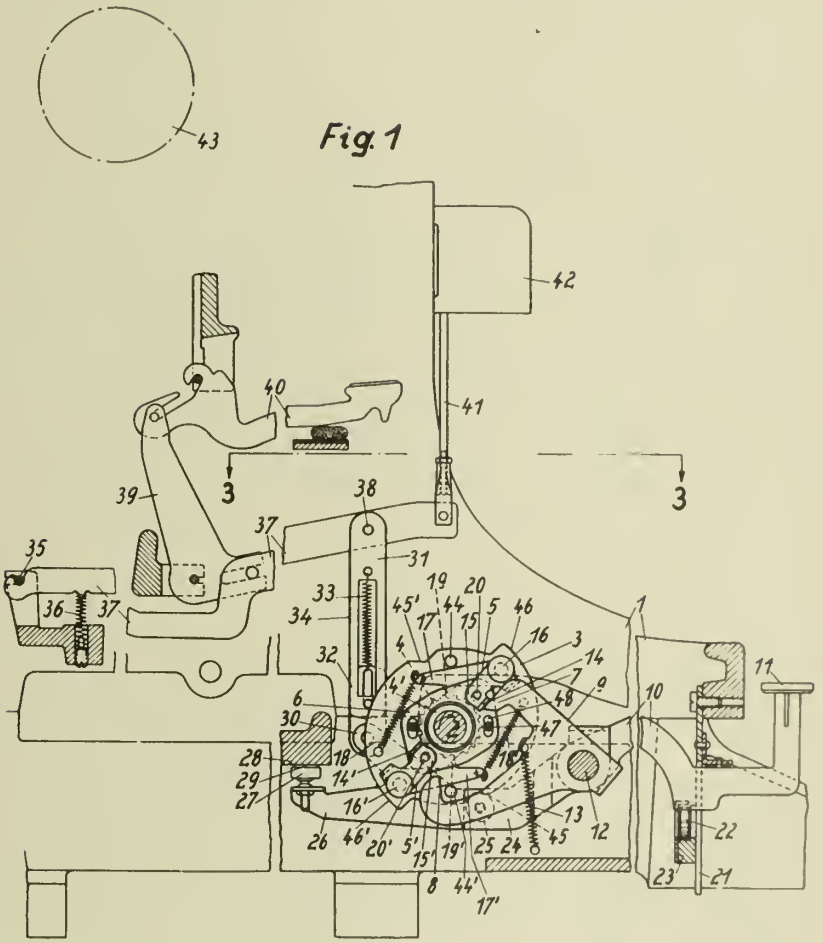


Inventors:
Erich Dronigke and
Hugo Schüler
By
Young, Emery & Thompson
Attorneys

PUBLISHED
MAY 18, 1943.
BY A. P. C.

E. DRONIGKE ET AL

DRIVE MECHANISM FOR OFFICE MACHINES

Filed Nov. 27, 1939

Serial No.
306,390

4 Sheets-Sheet 2

Fig. 2

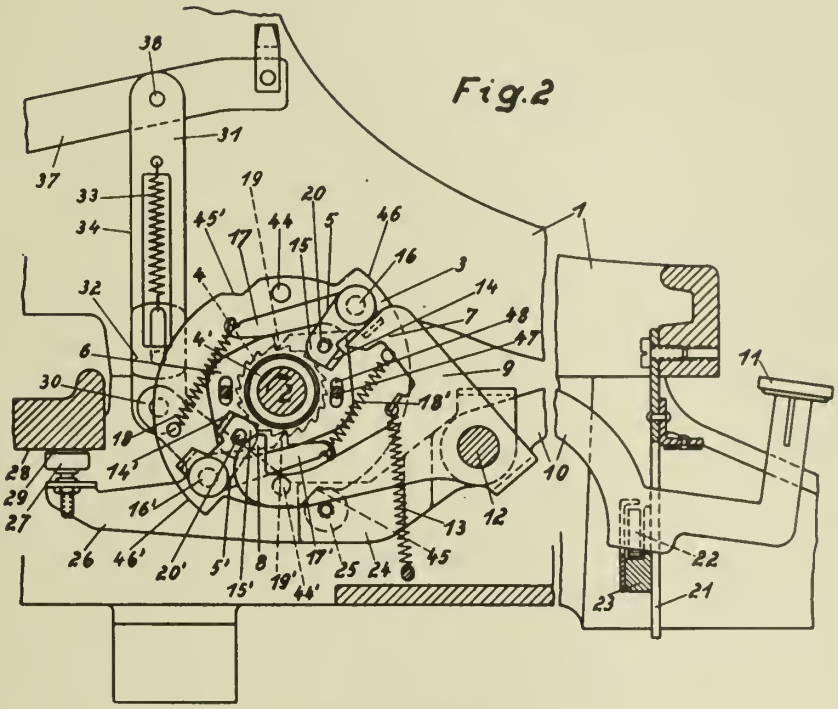

Fig. 3

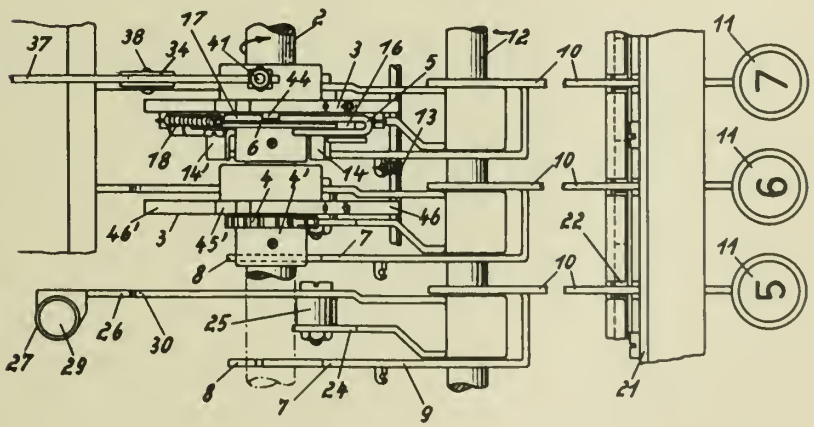

Inventors:
Erich Dronigke and
Hugo Schüler
By
Young, Quigg & Thompson
Attorneys

PUBLISHED
MAY 18, 1943.
BY A. P. C.

E. DRONIGKE ET AL

DRIVE MECHANISM FOR OFFICE MACHINES

Filed Nov. 27, 1939

Serial No.
306,390

4 Sheets-Sheet 3

Fig. 4

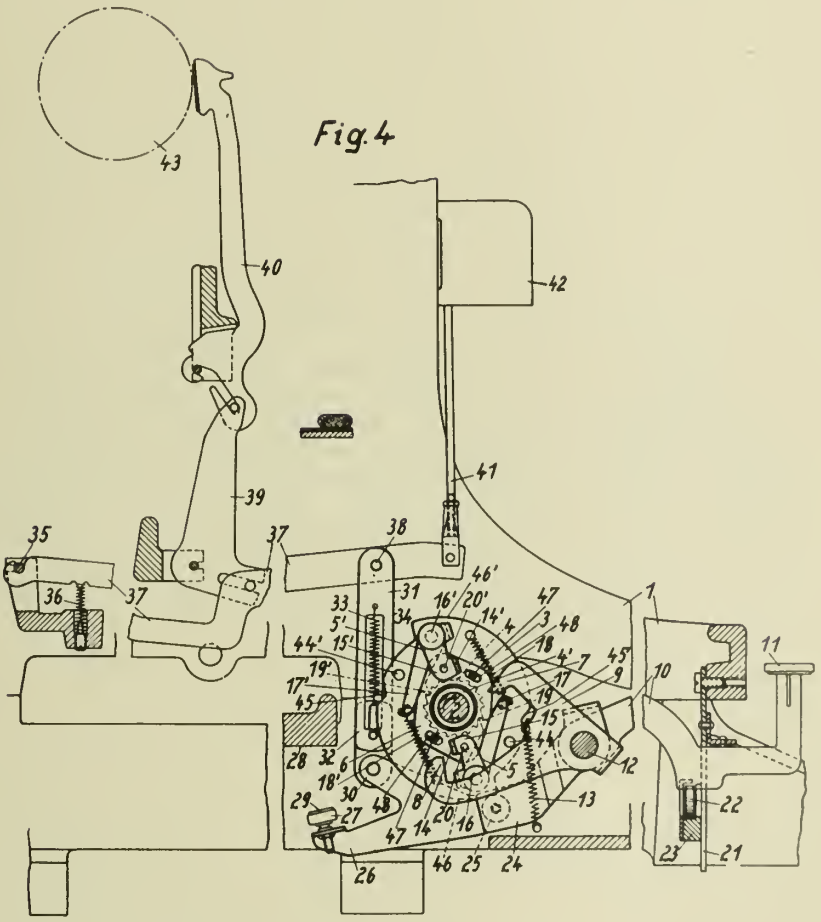


Inventors:
Erich Dronigke and
Hugo Schüler
By
Young, Quigg & Thayer
Attorneys

PUBLISHED
MAY 18, 1943.
BY A. P. C.

E. DRONIGKE ET AL

DRIVE MECHANISM FOR OFFICE MACHINES

Filed Nov. 27, 1939

Serial No.
306,390

4 Sheets-Sheet 4

Fig. 5

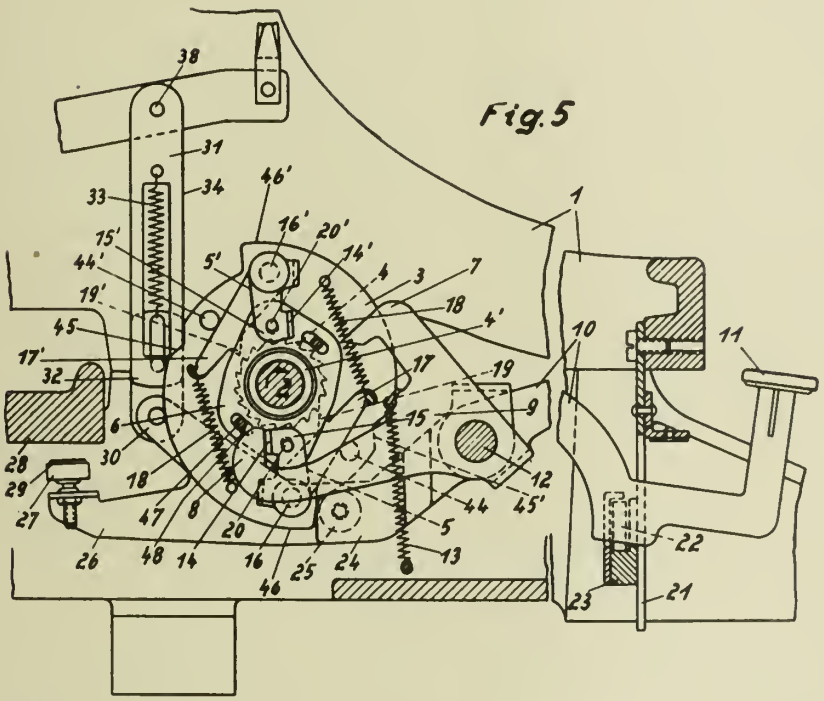


Fig. 6.

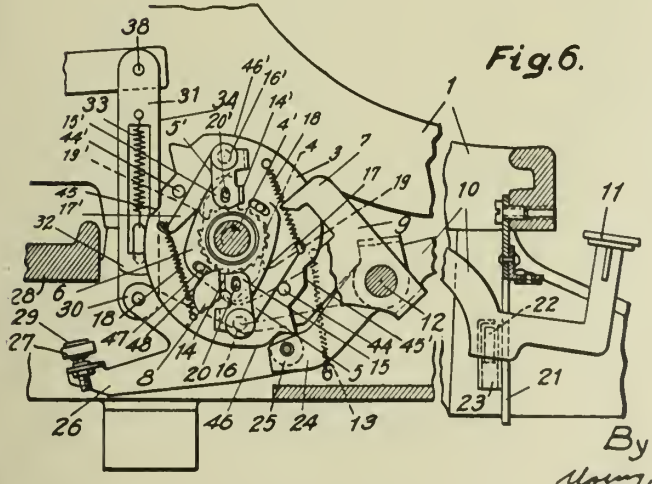


Inventors:
Erich Dronigke and
Hugo Schüler

By Young, Emery & Thorpe
Attorneys

Published May 18, 1943 Serial No. 307,990

# ALIEN PROPERTY CUSTODIAN

## PROCESS FOR DRESSING COALS BY EMPLOYING AN AQUEOUS HEAVY SUSPENSION PRODUCED FROM SILT

Hirosaburo Osawa, Kaji-mura, Iruma-gun, Saitama-ken, Japan; vested in the Alien Property Custodian

No Drawing. Application filed December 7, 1939

This invention relates to a process for dressing coals or the like by means of specific gravity separation, characterized by employing as a medium an aqueous heavy suspension produced from water and silt of the grain size 0.05–0.005 mm. or a material consisting largely of the silt.

There are various kinds of heavy solutions known for dressing or separating coals for laboratory use, which however are defective in being hard to obtain cheaply and claiming a big cost for recovering the solution attached on the surface of the coal to be treated. Thus it is an important object of study for experts how to prepare a cheap heavy liquid, in other words, how to reduce the cost of the heavy liquid employed for coal dressing. Of the known processes of this kind for dressing coals, the so-called Lessing's method is the only one that employs a heavy solution. It uses a saturated aqueous solution of calcium chloride and therefore has the drawback of requiring a big cost for the solution employed and accordingly is unfit for general use. There is also a method known as De Vooy's method which employs a heavy suspension prepared by dispersing clay and barite powders in water. It requires a smaller cost for the solution employed than Lessing's process and is considered only as being superior to the latter. Moreover, such suspension prepared by dispersing clay in water has the disadvantage of having high viscosity, although it is stable. It therefore is unsuitable as a medium for dressing coals. The clay is found anywhere in the world, so that but for the above disadvantage there would have been adopted a process for dressing or separating coals by employing as a medium an aqueous suspension prepared from the clay and water. As it is, such process has not been realized anywhere on account of the above fatal defect. This clay is only used together with other heavy solid materials as one of the materials for a heavy suspension.

After several year's hard study and various experiments conducted on the property of fine soils and the like to remove such defect of the clay and to investigate the most economical liquid as a medium, the inventor has succeeded in finding a heavy liquid to meet the requirement of heavy liquid coal separation by preparing an aqueous heavy suspension from water and silt or a material consisting largely of the silt collected from fine soils, sludgy tailings at ore dressing works or pulverized sand powder or obtained from silt deposit.

The present invention relates to a process for dressing coals or the like by means of specific gravity separation, characterized by employing as a medium an aqueous heavy suspension of the specific gravity of about 1.35–1.70 which suspension is produced from water and silt or a material consisting largely of silt collected from fine soils, the said sludgy tailings or pulverized sand powder or obtained from silt deposit and by dispersing this silt or the like in water in suitable proportion, about 0.7% of solid material : 1 of water to about 1.8 : 1 of same. The thus prepared aqueous heavy suspension has so low viscosity and stable density that it cannot only effect the desired coal dressing or separation with high efficiency, but also is more economical than in the above known processes.

Fine soils or the like under 2 m.m. according to the mechanical analysis for determining their grain sizes may be roughly classified into three kinds, viz. sand (2–0.05 mm.), silt (0.05–0.005 mm.) and clay (0.05–0 mm.) and the above sand may be subdivided into five kinds, namely, very coarse sand (2–1 mm.), coarse sand (0–0.5 mm.), medium sand (0.5–0.25 mm.), fine sand (0.25–0.1 mm.) and very fine sand (0.1–0.5 mm.), and then the above clay into two kinds, viz. clay (0.005–0.001 mm.) and colloid (0.001–0 mm.). If the samples classified by the above sub-division are dispersed in water, those having bigger grain size than the very fine sand all sink quickly in water and do not form stable suspensions. The suspension prepared from the clay has high viscosity, and the one produced from colloid has much higher viscosity. Thus, neither of them is fit for dressing coals. According to this invention, it has been found that the aqueous heavy suspension produced from water and silt or material consisting largely of silt has stability and low viscosity so that it is very suitable as a medium for dressing coals or the like. In experiments, the density of the aqueous heavy suspension according to this invention can be maintained uniformly without any special mechanical agitator during dressing or separating operation, and the low viscosity indicates the viscosity of such degree as is fit for coal dressing or separation, namely, the viscosity shown by a saturated aqueous solution of calcium chloride. The above silt may be collected in such way that coarse one is removed with sieve, while fine one is obtained by dispersing it in water in a very dilute state and thus utilizing the difference of the sinking velocity due to the difference of the grain size.

This invention has the advantage of being able

to dress coals or the like more economically than the methods which employ the known heavy suspension.

The following is the limit allowed to sand, clay and colloid to be contained in the above silt employed in this invention. It is advisable that the sands should be contained in silt as little as possible to maintain the density of the liquid in a stable condition, Especially, a coarser one than medium sand must not be contained in it. Moreover, in order that the viscosity of the liquid may not be high, the limit allowed to the quantity of clay and colloid to be contained in silt is narrowed with the increase of the desired specific gravity of the liquid. Above all, the removal of the colloid which is most powerful for increasing the viscosity is essential. For example, when the desired specific gravity of the aqueous suspension to be produced from water and the silt of specific gravity of about 2.65 is about 1.4, this silt is allowed to contain less than about 20% of clay and less than about 3.0% of colloid, whereas when it is about 1.6, more than 5% of clay and more than 0.5% of colloid must not be contained in it.

If the aqueous heavy suspension produced from water and the above silt is kept still in a separating tank, it will produce a relatively clear upper portion, which gradually increases its quantity, but when the coal or the like to be treated is thrown into it and the separation is started, the suspension has its density restored to the original condition quickly by the floating and sinking phenomena of the material to be treated and the operation of removing it, so that it maintains uniform density, thus making it almost unnecessary to stir it to stabilize its density. To easily separate the liquid attached on the surface of the material treated with a small quantity of water after the separation, the material to be treated had better have its surface wetted sufficiently with water before it is thrown into a separating tank. Also, when the desired specific gravity of the suspension is high, it is preferable to raise the temperature of the suspension as the means of lowering its viscosity.

For the said fine soil or the like from which the above silt is produced, it is preferable to have high specific gravity containing a larger quantity of silt and smaller quantities of sand, clay and colloid. Especially the one containing the smallest quantity of colloid should be chosen. The specific gravity of the above silt is about 2.4 to 3.0, although it varies according to the kind of the constituent, but is generally about 2.6 to 2.8.

The following is an example of the quantities of the above silt and water needed for preparing one litre of the aqueous heavy suspension used in this invention:

If the desired specific gravity of the suspension is 1.45 when the said silt of the specific gravity 2.65 is employed, the quantities of the silt and water may be 725 gr. and 725 c.c., while if it is 1.5, they may be 815 gr. and 692 c.c.

Thus, the present invention is a process for dressing coals or the like by means of a specific gravity separation, characterised by employing as a medium an aqueous heavy suspension which is prepared by dispersing in water the cheap and easily accessible silt and which can display the same as or higher dressing efficiency than the process employing the known heavy suspension. Therefore, this process is very effective to realize economical coal dressing.

HIROSABURO OSAWA.

Published May 18, 1943 Serial No. 307,581

# ALIEN PROPERTY CUSTODIAN

## MULTI MOTOR DRIVING MECHANISM, PARTICULARLY FOR AIR PROPELLERS

Fritz Nallinger, Stuttgart-N, Germany; vested in the Alien Property Custodian

Application filed December 5, 1939

The invention relates to a craft particularly an air craft with an air propeller commonly driven by more than one motor by means of a gear mechanism and consists therein that for each of these motors as well as for the gear mechanism an independent lubricant circuit is provided. These circuits have, when required, their own radiator and preferably their own supply pump for the lubricant. The supply pump for the gear circuit is driven in a suitable manner by the shaft of the gear at one side of the air propeller.

With respect to the known multi-motor driving mechanisms, wherein all or many of the motors are connected to a common radiator and collecting receptacle, the arrangement according to the invention has the advantage that the cooling and the lubrication is ensured in the fullest measure. In this manner the cooling circuit and the lubrication circuit is not influenced when the collecting receptacle or the radiator leak or when one of the motors stops and the same is still rotated by the other motors, its lubricating and cooling device also still works, until the corresponding motor is disengaged and entirely stopped. Moreover the stopped motor does not influence the cooling and lubrication of the other motors.

The gear mechanism for the commonly driving is advantageously provided also wtih a particular lubricant circuit, wherein the lubricant may also be the cooling fluid. If more auxiliary gear mechanisms are applied, e. g. for more air propeller shafts, then the lubricant circuit of the main gear supplies either the auxiliary gear with lubricant or each auxiliary gear has also its particular lubricating circuit.

The pump or pumps producing the circuit of the gear lubricant are all driven dependent on the common driven shaft so that a circulation of the gear lubricant and cooling fluid takes place as long as the common driving mechanism is driven and independent of the number of the just then driving motors.

The drawing shows a diagrammatical form of execution according to the invention and the figure shows indeed two motors 1 and 2, commonly driving an air propeller shaft 6 by means of a disengageable claw clutch 3, 4 and a gear 5, 6, 7.

According to the invention, there belongs to each motor a lubricating pump 9, sucking for instance from a collecting receptacle 10 oil and pressing the same to the lubricated spots 11 and 12 of the cylinders and the crankshaft. The return pipe 13 passes a radiator 14. Moreover a filter 15 is at the required place in the oil circuit.

Further each motor drives a cooling water pump 16. This motor gets its cooling liquid from a collecting receptacle 17 and presses the same to the spots of the motor to be cooled, e. g. to the cylinder jacket 1, 2. The return pipe 18 for the cooling liquid passes a radiator 19.

The gear 5, 6, 7 is also provided with a particular lubricant circuit, driven by a pump 20 and also provided with a radiator 21 cooled by the relative wind. The pump 20 is driven from the shaft 8, e. g. by means of a transmission gear 22.

The working of the shown arrangement appears without more from the drawing. Within the scope of the invention it is not essential in what manner the motors are constructed, in what manner and by what fuel they are driven, how many motors are driving the shaft 8 and where the radiator is placed in particular. The radiator and the receptacle for each circuit may be divided in order to mount the same in the most advantageous manner with respect to the available room and the safety. The separate parts may be separately disengageable and if necessary the liquid cooling may be replaced by a blower cooling.

FRITZ NALLINGER.

PUBLISHED
MAY 18, 1943.
BY A. P. C.

F. NALLINGER
MULTI MOTOR DRIVING MECHANISM, PARTICULARLY FOR AIR PROPELLERS
Filed Dec. 5, 1939

Serial No.
307,581

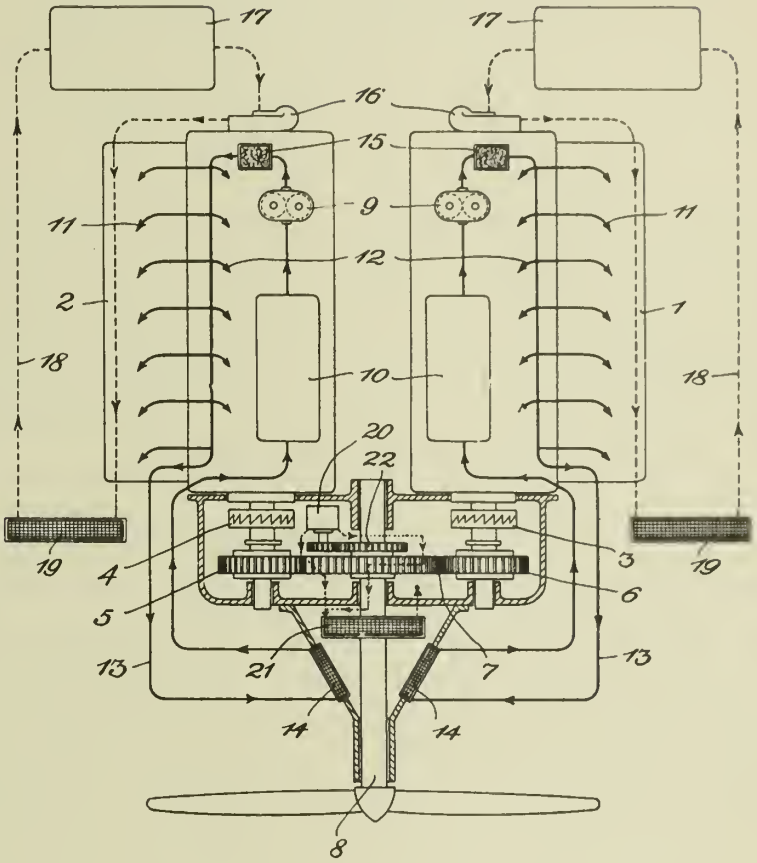


Fritz Nallinger
INVENTOR
BY
ATTORNEY.

Published May 18, 1943 Serial No. 308,290

# ALIEN PROPERTY CUSTODIAN

## PREPARATION OF NOURISHING SOLUTIONS FOR THE PRODUCTION OF CITRIC ACID BY THE FERMENTATION METHOD

František Kanhäuser and Josef Streubel, Kaznejov, near Plzen, Bohemia; vested in the Alien Property Custodian

No Drawing. Application filed December 8, 1939

It is known that certain kinds of moulds of the species Aspergillus, Citromyces, Mucor and Penicillium are capable of converting sugar from its solutions into citric acid. Further it is known, that it is possible to use as the fermentation solution diluted sugar making molasses (German Patent No. 461356) whose content of nourishing materials may be enhanced, if necessary, by the addition of mineral nourishing substances, particularly phosphates, which usually are present in the molasses in an insufficient proportion. The fermentation is effected by inoculating a sterile nourishing solution of molasses with spores of suitably selected and cultivated moulds of the above mentioned species. These spores germinate rapidly on the surface of the nourishing solution at a suitable temperature, e. g. 30 degrees Centigrade, and form there a continuous mould mycelium in which the biochemical process of conversion of the sugar into citric acid takes place. During such a biochemical process a part only of the sugar is converted into citric acid while a part of the same is spent for building the organic substance of the mould mycelium and another part of the sugar is burnt to carbon dioxide by respiration whereby the energy necessary for the process is provided. For the commercial success of the whole process it is necessary to have the largest possible proportion of the sugar converted into citric acid as rapidly as possible. Therefore, the amount of sugar which is converted into mould substance and that amount which is lost as carbon dioxide by respiration should be as small as possible. For this reason it has been proposed to reduce the respiration of the moulds by the addition of poisons in order to increase the yield of citric acid (German Patent No. 544.589), or to restrict the development of the mould mycelium beyond the necessary limit by destruction of the growth-producing substances. Since, however, the region where the process of producing citric acid from sugar takes place is the mould mycelium on the surface of the fermentation solution, it is necessary for the mould mycelium to be formed rapidly, in a sufficient amount and with a correct and intense functioning capacity. Sound mould mycelium of high efficiency is not too thick, forms a continuous crack-free resistant film having a dry surface which is strongly undulated, and shows a highly articulated growth in depth and an otherwise smooth inner surface which is in contact with the nourishing solution.

Upon inoculation of molasses solutions, or also of other nourishing solutions, with spores of the before mentioned moulds it may be observed in many cases that although the spores germinate well a very thin mould film is formed which becomes wetted through and then drops below the level of the solution, or no continuous mould film is formed at all but only separate spots of moulds. If such an "unhealthy" mould mycelium becomes wetted through or broken, or drops below the level, it is necessary to effect a new inoculation whereupon generally a continuous new mould mycelium is formed. However, the duration of the fermentation period is thus increased due, on the one hand, to the increase of the time necessary for the mycelium to be formed and, on the other hand, to the fact that the wetted mycelium, which has sunk deep, impedes the free diffusion of the nourishing solution into the new sound mycelium. Such wetting through of the mould mycelium also increases the danger of infection, since the moist surface of the mould film may be infected much more easily by bacteria and other micro-organisms. Further it has been found that a mould film which shows an inclination for becoming wetted through, or forms a continuous film at a slow speed only, is rough on its inner surface, instead of being smooth, and shows a bad permeability for the nourishing solution into the cells.

Now it has been found that this "unhealthy" formation of mould mycelium on molasses solutions is the result of superficially active substances, which accumulate on the surface of the nourishing solution without separating from the same as a new surface phase. These substances modify the surface tension and impart to the solution a tendency to foaming. It has been ascertained that this unfavourable phenomenon may be eliminated by removing the said substances influencing the surface tension of the solution, i. e. the strongly superficially active substances. The provisions permitting to remove these substances and to eliminate the above mentioned unfavourable effects of the same may be of various character. Sometimes it is sufficient merely to strip off the surface. However, far more efficient are such steps which permit an adjustable removal of the superficially active substances. Among such steps belongs first of all the production of foam in the nourishing solution by blowing in finely divided air or other gases. The active substances are discharged from the surface of the nourishing solution with the foam produced, and it is possible to regulate such removal by altering the amount and pressure of the air blown, or the duration of the

foaming period. By varying these factors the most favourable conditions for the growth and fermentation may be ascertained by the aid of a series of experiments on laboratory scale before undertaking the actual fermentation process on commercial scale.

Another intervention permitting to remove completely or partially the superficially active substances consists in the application of adsorption during the preparation of the nourishing solution. In such a case the working method may be carried out by admixing with the nourishing solution preformed insoluble adsorbing bodies which after a predetermined period of action are removed from the solution by decantation or filtration. As such bodies, charcoal or activated coal, clays (bleaching clays), silica gel or alumina gel may be conveniently employed.

According to another method precipitation is effected, in the nourishing solution, of bodies which have a considerable adsorption effect. This method covers for instance the production of precipitates of barium sulphate, insoluble sulphides, hydroxides or carbonates or of other insoluble compounds of the heavy metals or of the alkaline earths, the precipitant being added to the nourishing solution. By modifying the amount of the adsorbing bodies added, or of the kind and amount of the precipitant, of the cource and speed of the formation of the precipitate, it is possible to ascertain by preliminary experiments the most favourable conditions and extent of the removal of the superficially active substances and thus the best working conditions for the preparation of nourishing solutions.

It is obvious that the described methods for preparing the nourishing solution may be combined one with another to obtain the most favourable effect.

The following description refers to several examples, which facilitate the understanding of the working process and explain the influence of the described provisions.

To carry out the process according to this invention on laboratory scale enamelled vessels are used having a diameter of 20 cm. (fermentation surface 315 sq. cm) and a depth of 10 cm. These vessels are filled with two liters of a nourishing solution which has been prepared by diluting 600 grams of sugar molasses. The nourishing solution is acidified with about 20 cubic cm. of binormal (2n) sulphuric acid and about 4 cubic cm. of a 10% phosphoric acid solution are added. The solution is sterilized by boiling and introduced into the experimental vessels in a sterile space. The solution cooled down to about 35 degrees Centigrade is inoculated in a manner known per se with specially cultivated spores of appropriate moulds. After a twelve-day fermentation at a temperature of about 30 degrees Centigrade the well fermented solutions contain only about 2 to 5% of unfermented sugar, calculated on the original amount. The fermentation is then interrupted, and the mycelium is removed, pressed and extracted. The liquid extract is added to the fermented solution, and by the addition of lime under boiling conditions calcium citrate is precipitated. The analytically determined citric acid in the same, calculated on 100 parts of the sugar present, represents the fermentation yield.

In each of the following examples five similar experiments are carried out under uniform conditions in order to obtain a good average. Each vessel has been charged with 600 grams of molasses, that is 300 grams of sugar.

*Comparative example*

In the first group of experiments the above mentioned fermentation solution of molasses was treated without any further provision. After inoculation a very moist mould mycelium was obtained upon expiration of 24 hours, and in three amongst the five vessels the mycelium dropped into the solution so that it was necessary to inoculate these vessels anew. In two other vessels the mould mycelium recovered after 24 hours. In two vessels a rather strong infection was ascertained; these two vessels had a soft uneasily pressable mould film. After a twelve-day fermentation 993 grams of dry lime citrate containing 705 grams of citric acid were obtained from the 1500 grams of sugar, so that the yield amounted to 47 grams of citric acid per 100 grams of sugar.

*Example 1*

The same molasses as in the comparative example were used and a similar fermentation solution was prepared. However, after sterilization the total amount of 10.5 liters of nourishing solution was caused to foam by blowing in air which was distributed by means of a porous ceramic slab under a pressure of 100 millimeters of mercury during a period of 10 minutes. From the 10.5 liters of nourishing solution half a liter was removed by the foaming operation. The remaining 10 liters were distributed to five fermentation vessels and subjected to fermentation. The growth of the mould mycelium and the entire fermentation were perfect. A strong and sound mould film free from infection was obtained. After a twelve-day period of fermentation 1345 grams of dried lime citrate containing 976 grams of citric acid were obtained from the 1500 grams of sugar, so that the fermentation was effected with a yield of 65 grams of citric acid per 100 grams of the sugar present.

*Example 2*

The same molasses as in the comparative example were used and the fermentation solution was obtained in a similar manner. The difference consisted in that, for the total charge of 10 liters, 25 grams of activated coal were added during the sterilization. After agitation for half an hour of the boiling solution the latter was filtered and after cooling the inoculation was effected as in the preceding example. A sound mould mycelium was obtained and the entire fermentation was effected without infection. After a twelve-day fermentation 1280 grams of dried lime citrate were obtained in total, with a content of 952 grams of citric acid, from the 1500 grams of sugar, so that the yield amounted to 63.5 grams of citric acid per 100 grams of the sugar present.

*Example 3*

With the molasses of the preceding examples a similar nourishing solution was obtained. 5 grams of zinc sulphate were added to the solution and during sterilisation of the same an addition of a sodium sulphide solution in small excess was made to form a strongly adsorbing precipitate of zinc sulphide which was separated by filtration. After inoculation a strong and sound mould mycelium was obtained. The fermentation process was very uniform. After twelve days 1408 grams of lime citrate having a content

of 1038 grams of citric acid were obtained from the 1500 grams of sugar. Thus the yield in this case was 69.2 parts of citric acid per 100 parts of sugar present in the molasses.

The present invention is not limited to the application of any predetermined working method, or of predetermined bodies for removing from the nourishing solution the superficially active substances, which modify the surface tension of the same, and on the contrary covers all suitable working methods and the utilization of any desired bodies by means of which at least a partial removal of the superficially more strongly active substances from the nourishing solution is secured. The expression "strongly superficially active substances" is used in this specification and in the claims to denote such substances which even in small amounts modify substantially the surface tension of the nourishing solution at the level of the same, that is lead to an increase of such tension, but incidentally may also lead to a reduction of the surface tension.

In addition to molasses other carbohydrate containing mashes, such as sugar solutions having various degrees of purity, pressed juices or sugared starch containing mashes which subsequently are fermented to citric acid, may be treated by the process of the present invention in a similar manner.

The provisions referred to hereinbefore, by means of which the superficially active substances are removed, have been used already in the fermentation art, but for a purpose quite distinct from the fermentation of carbohydrate containing mashes, such as molasses, to citric acid. Thus with yeast charges for alcoholic fermentation, which by itself is connected with heavy foam formation due to the production of gases, the foam which is formed during boiling of the yeast charge is removed by a stripping-off operation. Also fermentation products, such as beer or wine, may be improved and made more durable by the addition of preformed clarifying agents or by precipitation of such agents from added salt solutions. However, all these provisions have a distinct purpose and are effected in a manner different from that which is applied in the present process.

FRANTIŠEK KANHÄUSER.
JOSEF STREUBEL.

Published May 18, 1943 Serial No. 308,425

# ALIEN PROPERTY CUSTODIAN

## MEASURING INSTRUMENT

Albert Palin, Berlin, Germany; vested in the Alien Property Custodian

Application filed December 9, 1939

This invention relates to a measuring instrument and refers more particularly to an instrument, the indicating hand of which should be capable of swinging within a comparatively large range, namely, to an angle of 180° and more. The invention is particularly concerned with a measuring instrument comprising a unipolar magnet system combined with a variable resistance.

Systems of this type are most advantageously utilized in equalizing bridge connections, such as Wheatstone bridge connections, the coils of the system constituting a part of the zero or neutral line of the bridge connection. The devices are particularly suitable for bridge connections wherein changes in the resistance of a bridge arm caused by an externally actuating force result in the movement of a coil system included in the diagonal or neutral line of the bridge connection.

In prior art, unipolar magnet systems have not been used to any large extent, since the induction of the air gap of these systems is comparatively small as compared to that of the instruments the indicating hand of which is movable to an extent of 90°. Furthermore, it was found that whenever unipolar magnet systems are used, it is difficult to provide for a homogeneous induction of the air gap, which is absolutely necessary for measuring purposes.

An object of the present invention is the provision of a measuring instrument having a unipolar magnet system, the indicating hand of the instrument being capable of moving within a comparatively large range, the positions of the hand corresponding exactly to any amount to be indicated, irrespective of the uniformity of the induction of the air gap.

Other objects of the present invention will become apparent in the course of the following specification.

The objects of the present invention may be realized by means of a unipolar magnet system which is provided with a comparatively thin resistance ring contacted by one or more slidable contacts which are connected mechanically with the axle of the system and which are connected electrically with one end of a coil system. The coil system constitutes the indicating means of the measuring instrument and may swing within a range of 180° or more.

The invention will appear more clearly from the following detailed description when taken in connection with the accompanying drawing showing by way of example a preferred embodiment of the inventive idea.

In the drawing:

Figure 1 is a diagram showing a receiving instrument having a unipolar magnet system combined with a variable resistance and a coil; and

Figure 2 is a diagram illustrating the arrangement of the devices shown in Figure 1 in a bridge connection.

The receiving instrument shown in the drawing comprises an annular permanent magnet having the poles N, S.

Obviously, any other suitable unipolar magnet system may be used in lieu of the one illustrated.

The annular magnet N, S is enclosed by a casing 1 consisting of soft iron or magnetic iron and used for transmitting the flow of the magnetic lines of force. Thus, a magnetically inducted air gap 2 is formed between the magnet and the casing 1.

The coil 3 is so arranged that it can swing within the air gap 2. For this purpose, the coil 3 is connected with a support (not shown), which is swingably mounted upon an axle 8, so that the coil 3 can swing about the axle 8.

The coil 3 is mechanically connected with an indicator or contact 5 which is in contact with an annular resistance 4 and which slides over that resistance.

The resistance 4 may consist of a single bent resistance wire, preferably of a very small diameter, or it may consist of a resistance wire which is wound about an annular support (not shown). If the last-mentioned construction is used, then in order to change the resistance substantially without steps the resistance wire should be extremely thin and it should be wound one winding next to the other upon the annular support.

The contact 5 is electrically connected with one end of the coil 3. The opposite end of the coil 3 is connected with a conducting ring 6, which is movable along with the coil 3, and which is in engagement with an immovable contact or brush 7 connected to a terminal (not shown).

The contact 7 may be substituted by a current-conducting soft spring which does not exert any substantial directional forces upon the coil 3, or with a small current conducting band.

The described construction may be advantageously included in a bridge connection illustrated in Figure 2, although the bridge connection may be conveniently substituted by any suitable equalizing connections.

A transmitting device G comprises a contact 10 which is in contact with and slidable over an

annular resistance 9. The contact 10 is swingable about an axle 11.

Any suitable device not shown in the drawing may be used for actuating the contact 10 and for moving it in relation to the resistance 9. The movements of the contact 10 may be caused by any physical quantity, for instance, by the changes in the lever of a liquid filling the tank, by a temperature-measuring device, by a change in pressure, or the like. The movements of the contact 10 should be a function of changes in a certain physical quantity.

Furthermore, the illustrated device G may be substituted by a thermal element or by an ohmic resistance which is influenced by changes in temperature.

An important task of the present invention is that changes in the resistance of the device G should be transmitted to the receiving instrument shown in Figure 1 and should be exactly reproduced by that receiving instrument.

For that purpose, the contact 10 is connected with a wire 12 the opposite end of which is connected to the immovable contact 7. One end of the resistance 9 is connected by a wire 13 with an end of the resistance 4, while the opposite ends of the resistances 9 and 4 are connected with each other by the wire 14. The wires 13 and 14 are connected to a source of electrical energy which is diagrammatically indicated in Figure 2.

Thus, the receiving device of Figure 1 and the transmitting device G are included in a Wheatstone bridge connection. The contact 10 is connected by means of the wire 12, the contact 7, and the ring 6 with one end of the rotary coil 3 of the receiving device, and is also connected by means of the contact 5 which is electrically connected to an end of the coil 3, with the resistance 4. Thus, the contact 5, the coil 3, the wire 12, and the contact 10 constitute the diagonal or neutral line of the Wheatstone bridge.

The arms of the bridge are constituted on the one hand by the conduit 13, a portion of the annular resistance 9, and a portion of the annular resistance 4, and, on the other hand, by the wire 14 and the other portions of the annular resistances 4 and 9.

The illustrated unipolar magnet system may be so constructed that the device can be advantageously utilized in connection with an alternating current.

The operation of the device is as follows:

As soon as some physical quantity causes a movement of the contact 10 over the resistance 9, the balance of the bridge connection is disturbed and a current flows through the diagonal or neutral line of the bridge, that is, through the contact 10, the wire 12, the contact 7, the ring 6, the coil 3 and the contact 5. The current flowing through the coil 3, which is situated in the magnetic field of the magnet N, S, will exert a force upon the coil which will cause the coil to swing within the gap 2, along with the contact 5, which is mechanically as well as electrically connected to the coil 3. The coil 3 will continue its movement until the position of the contact 5 again corresponds to the position of the contact 10, i. e., until the voltages are balanced at both parts of the bridge connection.

The new position of the indicator 5 will, therefore, correspond exactly to the changes in the physical quantity which are to be measured by the instrument. The contact 5 may swing over a scale which will clearly indicate the extent of such changes.

It is apparent that the specific illustrations shown above have been given by way of illustration and not by way of limitation, and that the structures above described are subject to wide variation and modification without departing from the scope or intent of the invention. For example, the single contact 5 shown in the drawing may be substituted by a plurality of comparatively thin contacts.

Whenever necessary, the receiving device may be combined not only with an indicating device, particularly with one comprising a hand movable over a scale, but it can release, depending upon the movements of the contact 5, certain steering or regulating forces. One or more additional contacts engaging the resistance 4 may be utilized for such steering or regulating purposes, and it is not absolutely necessary that these additional contacts be electrically and conductively connected with the transmitting device G, but they may be utilized to influence currents in secondary circuits. Furthermore, in addition to the coil 3 through which the bridge current flows, other coils may be provided each of which is dependent on different transmitting devices, so that each of the coils will additionally influence the position of the contact 5. For example, in a transmission level gauge, the air pressure may be additionally considered and may have a correcting effect upon the measuring device, or certain corrective forces may be utilized along with the principal forces for steering purposes. Furthermore, it is possible to provide a construction wherein the annular resistance 3 will be mechanically connected with the coil 3 and will swing along with the coil, while the contact 5 will remain immovable and be firmly connected with the casing of the instrument. All of such and other variations and modifications are to be included within the scope of the present invention.

ALBERT PATIN.

PUBLISHED
MAY 18, 1943.
BY A. P. C.

A. PATIN

MEASURING INSTRUMENT

Filed Dec. 9, 1939

Serial No.
308,425

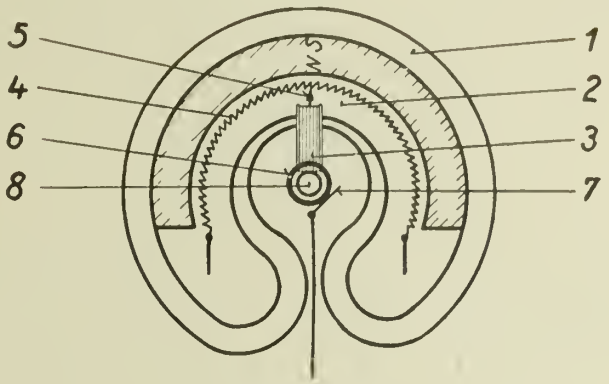


Fig. 1

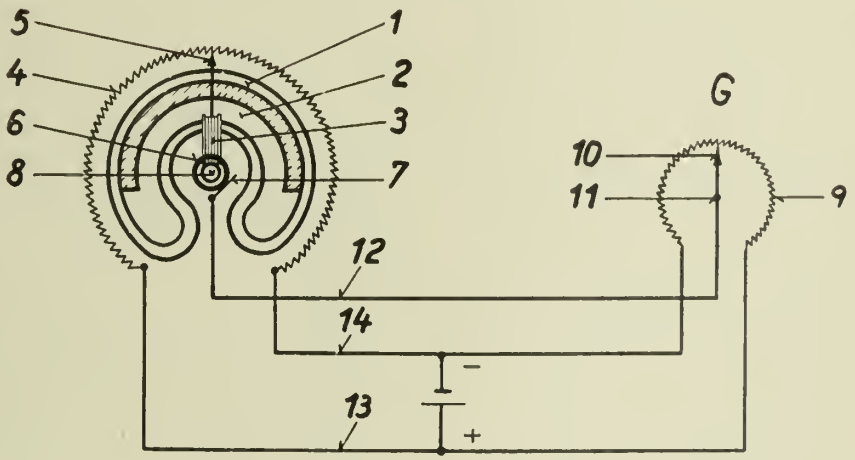


Fig. 2

Inventor:
ALBERT PATIN

By: Richards & Geier
Attorneys:

Published May 18, 1943 Serial No. 308,479

# ALIEN PROPERTY CUSTODIAN

## ELECTROMAGNETIC MULTIPLE-DISC CLUTCH

Anton Ryba, Bolzano, Italy; vested in the Alien Property Custodian

Application filed December 9, 1939

The present invention relates to electromagnetic multiple-disc clutches particularly adapted for use in the gearing of motor vehicles.

Clutches of this kind hitherto were not adapted to fulfil practical requirements owing to too small specific efficiency, too small durability and annoying remanence phenomena,.

The object of my invention which is a continuation in part of my copending U. S. Application Ser. No. 176,339 filed November 24, 1937 for "Electromagnetic multiple-disc clutches" is to provide an electromagnetic multiple-disc clutch which obviates the above mentioned deficiencies. To this purpose my clutch is provided with discs consisting of ferromagnetic material tempered to about 40 degrees Rockwell, said discs being so thin that on a magnetic force acting upon them they elastically yield and mutually are shifted to perfectly bear against each other. I have found that on cutting out the current such thin and tempered discs mutually disengage without any remanence action and that such discs, moreover, have the required resistance to wear to render the clutch usable to the highest degree for all practical purposes.

Discs made as explained above may be used in clutches in which the magnetic flux once only traverses the set of discs in an axial direction as well as in clutches in which the magnetic flux traverses the discs twice in an axial direction. In the latter case the discs in the annular zone of the exciting coil are provided with a number of perforations.

Ferromagnetic materials suitable for the manufacture of the clutch discs are well known. For instance I have found that kinds of steel having about O, 7% carbon, O, 25% silicon, O, 5% manganese and some thousandths of sulphur and phosphorus are extremely suitable.

To direct the magnetic flux mainly in an axial direction through the discs a notched sleeve of non-magnetisable material is provided into which engage the inner discs.

To reduce as far as possible the losses due to idle running of clutches running in oil, the use of well known means is recommended, for instance deforming the discs by means of hollow presses, corrugating or simply bending or inserting of resilient members.

In the accompanying drawings some constructions of clutches according to the invention are shown by way of example.

In these drawings:

Fig. 1 is a longitudinal section through a clutch in which the magnetic flux twice traverses the set of discs,

Fig. 2 shows a longitudinal section through a clutch in which the magnetic flux only once traverses the set of discs,

Fig. 3 is a view of an inner disc of the clutch according to Fig. 1.

Fig. 4 is a view of an outer disc of the clutch illustrated in Fig. 1,

Fig. 5 is a view of an inner disc of the clutch shown in Fig. 2, and

Fig. 6 is a view of an outer disc of the clutch illustrated in Fig. 2.

As may been seen from the drawings, the electromagnet 1 is connected to a gear wheel 2 which is rotatably mounted upon the shaft 3. In the concentrical annular space of the electromagnet 1 an exciting coil 4 is inserted the terminals of which are connected to mass on the one hand and to a slip-ring 5 on the other hand. The latter is pressed upon the electromagnet 1 and an insulating layer 6 being interposed between the ring 5 and the electromagnet 1. Also fixed upon the electromagnet 1 is a ring 7 which is provided with projections or dogs 7*a* cooperating with the outer discs 8. The inner discs 9 engage into a notched sleeve 10 consisting of a preferably non-magnetisable material. This sleeve in the construction shown in Fig. 1 is directly connected to the shaft 3, whereas said sleeve in the construction shown in Fig. 2 is fixed to a ferromagnetic sleeve 11. The latter is connected to the shaft 3 and at a point of contact with the armature 12 its outer diameter is as large as that of the non-magnetic sleeve 10. The armature 12 serves as return path for the magnetic flux. The discs shown in Figs. 3 and 4 belong to the clutch illustrated in Fig. 1 and in the annular zone of the exciting coil are provided with a row of perforations. The discs shown in Figs. 5 and 6 belong to the clutch illustrated in Fig. 2 and are formed as simple narrow rings.

If current traverses the coil 4 a magnetic field is produced in the sense of the dotted line which traverses the discs and causes the thin tempered discs to perfectly bear against each other, whereby the two members of the clutch are connected together by friction. On cutting out the current the remanence is opposed by the multiple subdivision of the set of discs, the low thickness of the discs as well as the elastic reaction of the discs.

ANTON RYBA.

PUBLISHED
MAY 18, 1943.
BY A. P. C.

A. RYBA

ELECTROMAGNETIC MULTIPLE-DISC CLUTCH

Filed Dec. 9, 1939

Serial No.
308,479

2 Sheets-Sheet 1

Fig. 1

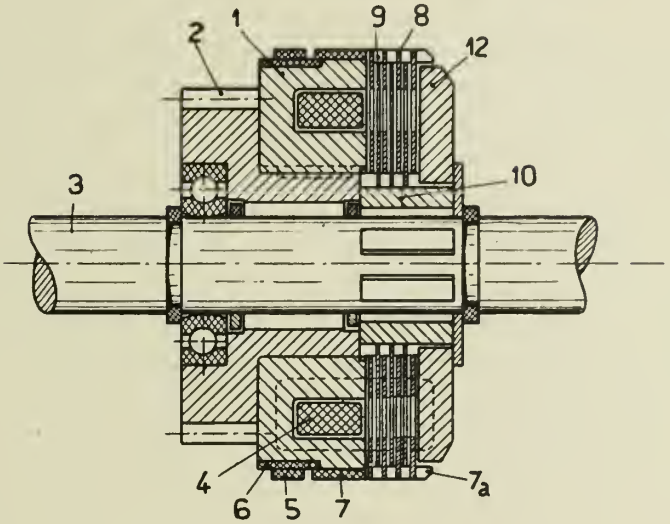


Fig. 2

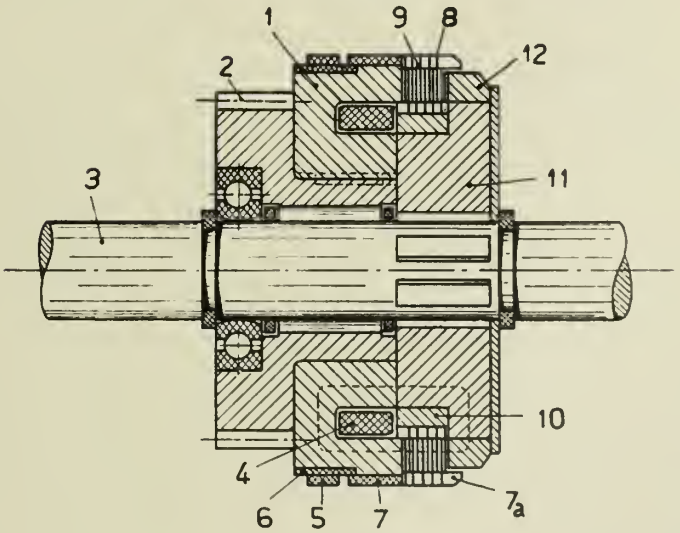


Inventor;
A. Ryba

by Glascock Downing & Seibold
Attys.

PUBLISHED
MAY 18, 1943.
BY A. P. C.

A. RYBA

ELECTROMAGNETIC MULTIPLE-DISC CLUTCH

Filed Dec. 9, 1939

Serial No.
308,479

2 Sheets-Sheet 2

Fig. 3

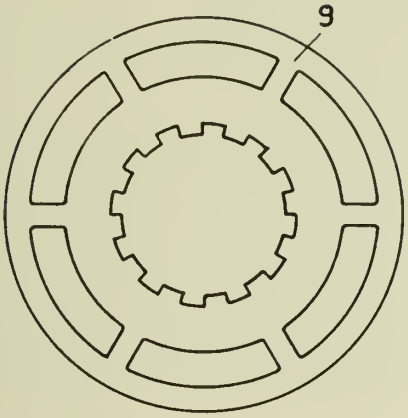


Fig. 4

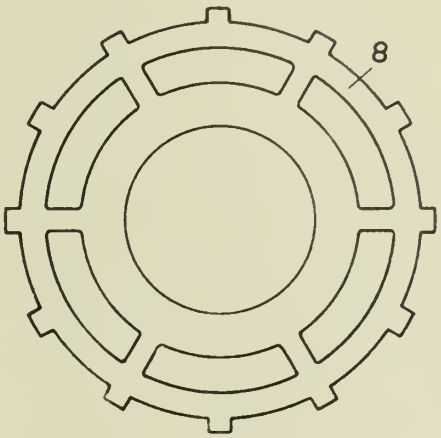


Fig. 5

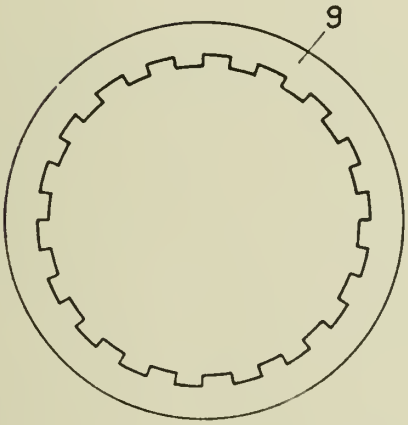


Fig. 6

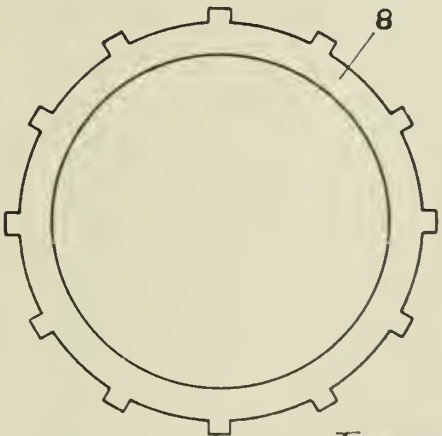


Inventor;
A. Ryba

By: Glascock, Downing & Seebold
Atty's

Published May 18, 1943 Serial No. 308,738

# ALIEN PROPERTY CUSTODIAN

## METHOD AND DEVICE FOR INCREASING, ON ALTERNATING CURRENT SUPPLY SYSTEMS, THE EFFICIENCY OF ELECTRIC LIGHTING INSTALLATIONS AND FOR SUPPLYING ELECTRICAL APPARATUS OPERATING AT VERY LOW TENSION

Charles Franchini, Paris, France; vested in the Alien Property Custodian

Application filed December 11, 1939

It is known that for an equal expenditure of energy, the luminous flux emitted by metal filament electric lamps operating at very low voltage (between 6 and 20 volts for example) is greater than that emitted by lamps operating directly on the usual supply mains voltage (110–220 volts, etc.).

The following table shows, by way of example, the luminous efficiencies, on the one hand of lamps supplied at 20 volts, and on the other hand of lamps supplied at 115 and 220 volts respectively.

| Consumption in watts | Luminous flux expressed in lumens for voltages of— | | |
|---|---|---|---|
| | 20 volts | 115 volts | 220 volts |
| 15 | 185 | 135 | 120 |
| 25 | 355 | 260 | 220 |
| 40 | 640 | 460 | 375 |
| 60 | 1050 | 760 | 600 |
| 75 | 1380 | 1000 | 850 |
| 100 | 1850 | 1450 | 1200 |
| 150 | 2750 | 2250 | 2000 |
| 200 | 4000 | 3000 | 2750 |
| 300 | 6500 | 5000 | 4500 |

It would appear to be logical, in a household lighting installation operating on an alternating current supply system, to reduce the voltage of the supply system by placing a transformer at the output of the meter of the installation and use very low voltage lamps.

This solution, however, offers rather serious drawbacks. It would, in fact, be necessary to change all the conductors of the existing installation and replace them by conductors of larger cross-section, owing to the fact that very low voltage lamps (6 to 20 volts) require a heavier current. This modification of the installation would involve a fairly considerable initial expense. Furthermore, the transformer placed at the output of the meter would always have to be of higher power than that necessary for operating all the lamps of the installation simultaneously and said transformer would have to remain connected to the supply system, even for the operation of a single lamp, thereby involving fairly high continuous no-load losses.

The method which is the object of the present invention and the device for carrying out said method enable the above specified drawbacks to be obviated.

The method which is the object of the invention consists, on the one hand in converting solely the existing lighting apparatus (whatever they may be and designed to operate at a usual voltage of between 110 and 220 volts) into apparatus suitable for operating at a very reduced voltage, this being effected without its being necessary to touch the existing installation in any way, and on the other hand in interposing in parallel between the supply system and the very low voltage lamps, a choke-coil (preferably with a closed core) provided with a number of intermediate tappings equal to the divisor minus 1 adopted for transforming the voltage of the supply system down to a very low voltage, this being done so as to make it possible to supply individually or simultaneously the various lamps connected between the various tappings of the choke-coil, its being possible for said lamps optionally to be of different unit powers.

The device (tapped choke) used for carrying out the invention behaves like a very high efficiency 1/1 ratio autotransformer (a fact which is all to the user's advantage), the single winding of which is provided with a number of tappings, whereby one of the very low voltage lamps supplied by the device can cease to operate (either by being turned off purposely, or owing to deterioration) without the operation of the other low voltage lamps still in use being substantially modified.

The drawback of the well known system of the supplying at low voltage a plurality of lamps connected in series across the terminals of the supply system is thus avoided, in which arrangement all the lamps in question had to be constructed to take strictly the same amperage, the failure of one of them necessarily involving the stoppage of the whole arrangement.

In the two figures of the accompanying drawing, there is shown, on the one hand the fundamental diagram for carrying out the method, and on the other hand the practical wiring diagram of a device according to the invention.

According to the invention and as shown in Fig. 1, a choke-coil S preferably provided with a closed core N, is connected across the terminals A and B of an alternating current supply system whereof the voltage is E. In addition to the output terminals *a* and *g*, the coil S is provided with intermediate tappings *b*, *c*, *d*, *e*, *f* (which are preferably equidistant), in such a manner that between each bridge *a*—*b*, *b*—*c*, *c*—*d*, *d*—*e*, *e*—*f* and *f*—*g*, a voltage E′ is obtained which is suitable for supplying a lamp at a very low voltage.

It will immediately be seen that the various lamps may have unit powers that are slightly different from each other; furthermore, one of the lamps may be switched off without involving

a stoppage of the operation of the other lamps connected to the circuit. A device of the type of the one shown herein can readily be incorporated, owing to its small size, in chandeliers and any other lighting apparatus, its being quite possible for the switch I of the existing installation to subsist for the control of all the lamps connected to the device.

The device shown diagrammatically in Fig. 2 for practically carrying out the method is similar, in principle, to the one shown diagrammatically in Fig. 1, but is provided at one end of the choke-coil S with a number of tappings C which enable it to be connected to supply systems of different voltages.

In this figure, $i_1$, $i_2$, $i_3$, etc. designate the individual switches controlling the very low voltage lamps $L_1$, $L_2$, $L_3$, etc.

Tests which were carried out when the invention was applied to very low voltage electric lighting gave results that showed in a striking manner the economy it was possible to effect.

One of these tests was made on an existing installation comprising fifteen 150 watt 115 volt lamps giving 90 lux (measured on a plane one meter from the ground, below the luminous source) for an exact consumption of 2,268 watts. After the installation had been converted according to the invention and fifteen 100 watt lamps were used all operating at 20 volts, 105 lux were obtained for a consumption of 1,540 watts, measured under the same conditions as above. The result is therefore a decrease of consumption of 728 watts (i. e. over 30%), on the one hand, and an increase of 15 lux on the other hand.

The invention can equally well be applied to the lighting of dwelling houses and to that of commercial or industrial premises.

The invention is moreover applicable not only to electric lighting, but also anywhere it is desired to supply at will, simultaneously or individually, a plurality of apparatus at a voltage which is not dangerous (for example electric toys).

It is moreover obvious that the device for carrying out the novel method may be subjected to modifications of detail without departing from the invention. Thus, for example, the multiple tapping choke-coil may be arranged simultaneously either as a voltage step-up autotransformer (in the case of the simultaneous supply of a fairly large number of low voltage apparatus by a relatively low voltage supply system, for example 110 to 115 volts), or as a voltage step-down autotransformer (case of the simultaneous supply of a small number of low voltage electric apparatus by a relatively high voltage supply system, for example 220–240 volts.

CHARLES FRANCHINI.

PUBLISHED
MAY 18, 1943.
BY A. P. C.

C. FRANCHINI

METHOD AND DEVICE FOR INCREASING, ON ALTERNATING CURRENT SUPPLY SYSTEMS, THE EFFICIENCY OF ELECTRIC LIGHTING INSTALLATIONS AND FOR SUPPLYING ELECTRICAL APPARATUS OPERATING AT VERY LOW TENSION

Filed Dec. 11, 1939

Serial No. 308,738

Issued Jan. 5, 1940.

FIG.1

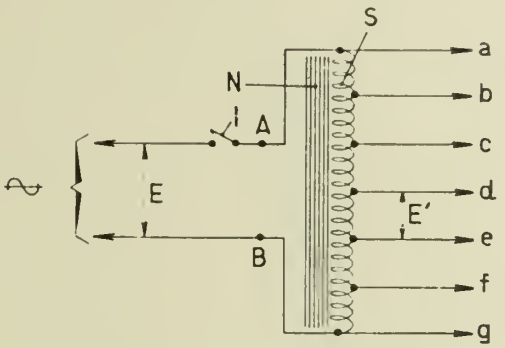


FIG.2

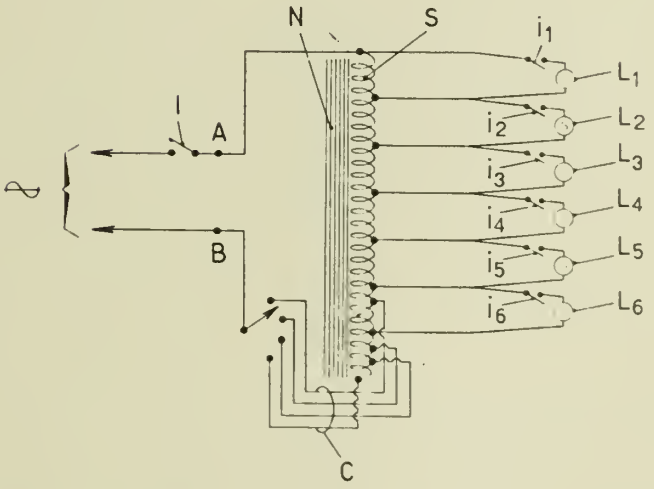

Published May 18, 1943 Serial No. 309,108

# ALIEN PROPERTY CUSTODIAN

## OVERHEAD CONTACT HOOP

Ottmar Conradty, Rothenbaeh on the Pegnitz, Germany; vested in the Alien Property Custodian

Application filed December 13, 1939

This invention relates to collector bows or overhead contact hoops of the carbon type for electrically driven vehicles.

It is an object of the present invention to provide a collector bow or trolley brush ensuring very intimate contact between the carbon material and the holder therefor.

Another object of the invention is to reduce the weight of the complete collector bow.

Still another object of the invention is to provide a collector bow having a favourable streamline shape and low aerodynamic resistance.

With these and other objects in view, as may become apparent from the within disclosures, the invention consists not only in the structures herein pointed out and illustrated by the drawings, but includes further structures coming within the scope of what hereinafter may be claimed.

The character of the invention, however, may be best understood by reference to certain of its structural forms, as illustrated by the accompanying drawings in which:

Fig. 1 is a cross sectional view of a known form of a collector bow.

Fig. 2 is a cross sectional view of a further known form, comprising a stream-lined holder for the carbon brush.

Fig. 3 is a cross sectional view of still another known form, comprising a hollow holder for the carbon brush.

Fig. 4 is a cross sectional view of a collector bow having the invention applied thereto.

Fig. 5 is a perspective, sectional view of a mould for casting the collector bow shown in Figs. 4 and 6.

Fig. 6 is a front elevation, partly in section, of my novel collector bow system.

Figs. 7 and 8 are cross sectional views showing modifications of the form of Fig. 4.

Similar reference numerals denote similar parts in the different views.

Referring now to the drawings in greater detail and first to Figs. 1, 2 and 3, showing known constructions, it will be seen that a strip 1 of carbon or similar brush material is held dove-tail fashion in a holder or mounting 2, or 2*a*, or 2*b*, respectively, consisting, for instance, of light metal, applied to the carbon in a casting process. The shape of the holder 2 according to Fig. 1 is unfavourable from an aerodynamic standpoint, while the stream-line shape 2*a* shown in Fig. 2 is rather heavy. It has been suggested, therefore, to provide a recessed holder, as indicated at 2*b* in Fig. 3, however, while in the constructions according to Figs. 1 and 2 pressure is exerted by the holder upon the carbon due to the shrinking of the holder as it cools down after the casting, no such pressure is produced in the design according to Fig. 3 and hence, no intimate contact between the holder and the carbon brush is obtained. Moreover, the contact area between the carbon and the holder is diminished, since the foot of the carbon strip is not engaged by the metal holder.

It will thus be seen that none of the known forms of collector bows meets with all of the above mentioned requirements, viz—intimate contact, stream-line shape and light weight.

Referring now to Fig. 4, it will be noted that the holder is also hollow similar to the holder 2*b* shown in Fig. 3, however, the portions 2′ and 2″ of the holder forming the dove-tail mounting are additionally connected by a transverse wall portion 2‴, and the hollow space between the walls is filled up by a very light core 3, thus re-establishing the shrinking action which is present with the solid holder shown in Fig. 2. The shrinking effect is indicated by the arrows in Fig. 4.

The structure shown in Fig. 4 may be produced by a mould of the type shown in Fig. 5. The carbon strip 1 is embedded in the lower half 4 of the mould, with its dove-tail portion extending into the upper half 5 of the mould which is formed with a hollow space corresponding to the stream line shaped cross section of the holder. A very light core 3 is disposed in the mould, by means of spacer pins 6, and the hollow space within the mould is now filled up by the light metal melt, through channels 7. On cooling down, the casting is removed from the mould and corresponds to the bow shown in Fig. 4.

In order to permit shrinking of the cast metal, the core 3 must be somewhat porous to permit a certain compression, or it must consist of a material which is also subject to shrinkage when cooling down.

The core may be subdivided into several portions 3, 3, as indicated in Fig. 6, and spacings may be left between the portions to form intermediate partition wall 8 by which the strength of the holder is improved.

Further, or by way of alternative, longitudinal partition walls 9 may be arranged as indicated in Fig. 7 by the provision of two parallel spaced core portions 3′ and 3″ in the mould.

It is also contemplated to further reduce the weight of the complete structure by the provision of hollow cores 3*a*′ and 3*a*″, as shown in Fig. 8.

Cores of various materials may be used, but preferably asbestos wool or kieselguhr and similar materials are used, in a loosened form to permit compression.

The method and apparatus of the present invention have been described in detail with reference to specific embodiments. It is to be understood, however, that the invention is not limited by such specific reference but is broader in scope and capable of other embodiments than those specifically described and illustrated in the drawing.

OTTMAR CONRADTY.

PUBLISHED
MAY 18, 1943.
BY A. P. C.

O. CONRADTY
OVERHEAD CONTACT HOOP
Filed Dec. 13, 1939

Serial No.
309,108

Fig. 1

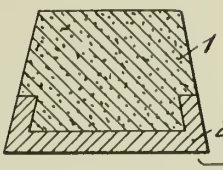


Fig. 2

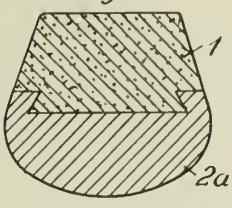


Fig. 3

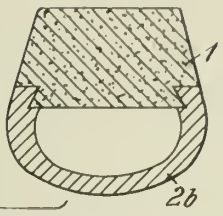


Known construction

Fig. 4

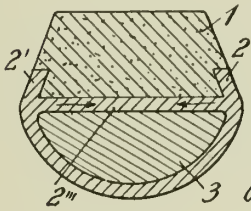


Fig. 5

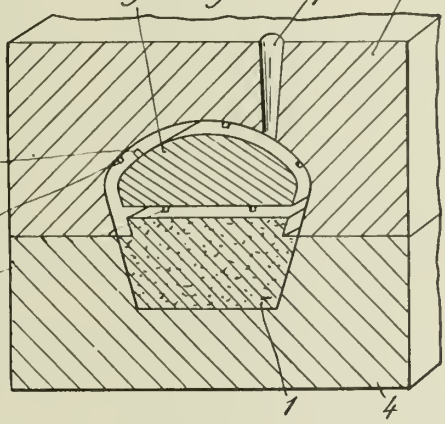


Fig. 7

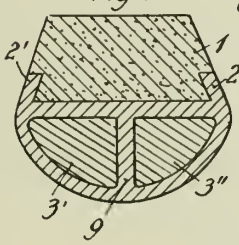


Fig. 6

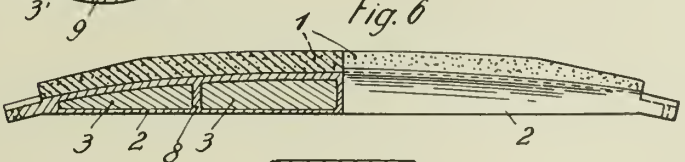


Fig. 8

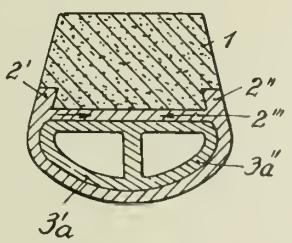


Inventor:
Ottmar Conradty
By
Young, Emery & Thompson
Attorneys

Published May 18, 1943 Serial No. 309,215

# ALIEN PROPERTY CUSTODIAN

## TICKET DELIVERING MACHINE

Biagio Beria, Turin, Italy; vested in the Alien Property Custodian

Application filed December 14, 1939

This invention relates to a machine which delivers tickets and performs checking registrations. The machine has been more particularly developed for automatically distributing tickets having a fixed value, for instance railway tickets for a determined mileage, and it comprises special controlling and checking devices that may be usefully employed also in machines delivering tickets for public amusement places, such as theaters, cinemas and the like, with a guaranteed accuracy both in respect of its operator and taxation authorities.

The accompanying drawings show diagrammatically by way of example the machine according to this invention used for delivering railway tickets having a fixed value that may be formed with coins of two different denominations, for instance one and two with a fixed value for instance of six dollars.

Figures 1, 2 and 3 show a front view of the wholly closed machine, as it appears in use, a side view with the normally locked inspection lid, removed to show the counters and the "reading" lever, and a plan view of the machine, respectively.

Figure 4 is a detail view on an enlarged scale of the inner parts visible in Figure 2.

Figure 5 is a detail view on an enlarged scale of the device for changing the day and month to be printed on the ticket and checking tape, which would be visible in the position of the machine shown in Fig. 1 upon opening the normally locked lid.

Figure 6 shows a detail of the device released by the coins inserted into and accepted by the machine which, on passage of each coin, actuates the device shown in Figures 9 and 10.

Figure 7 shows the knob, visible also in Figures 2 and 4, which becomes accessible by opening the locked lid of the machine, for actuating the machine by hand after the "reading" lever has been brought into a position rotated through 90° to the right or left, respectively, with respect to the position shown in Figures 2 and 4.

Figure 8 shows a detail of the automatic mechanism for closing the coin slots when the paper strip tears or is near the end, and for closing the slot for the coin of higher denomination when insertion of one of these coins would exceed the fixed ticket price, and, finally, for closing the slits when the fixed value is reached. This mechanism further comprises means for automatically uncovering the slits at the end of the operating cycle of the machine and fully restoring the mechanism shown in Figures 9 to 10 to its initial position.

Figures 9 and 10 show the two parts mounted on one axis which form the central mechanism. This mechanism gives a light signal on insertion of each successive coin, blocks the coin slots as mentioned above and automatically releases the machine when the fixed value has been reached by the coins thrust in and accepted by the machine.

Fig. 11 shows the printing mechanism and a device controlling two counters, one of which records all the operating cycles performed by the machine, while the others only record the checking cycles which deliver "void" tickets with total or sub-total reading, that is with and without return to zero position.

Figure 12 shows the main electric diagram of the machine.

Figures 13, 14 and 15 show three examples of how a ticket is printed, namely, printing of a "valid" ticket delivered by the machine operating automatically on insertion and reception of coins for the fixed predetermined amount, and printing of a "void" ticket during the checking operation actuated by the hand knob, with total and sub-total taking, respectively.

The main features of the machine are as follows:

1. The ticket may be obtained by any combination of good coins forming the fixed value.

2. Successive receptions by the machine of the the coins thrust in are checked by means of light signals.

3. Automatic blocking of the coin slot when the coins inserted into and accepted by the machine reach a value such that any further coin would exceed the total fixed value.

4. Exhibiting accepted coins.

5. Possibility of recovery by user of all the coins accepted before reaching the full fixed value.

6. On reaching said fixed value, the machine automatically starts and actuates the totalizer, the automatic recording devices, etc. and prints the ticket and check strip.

7. The machine may operate in two different manners: firstly, automatically, on reaching the fixed amount inserted by the user and accepted by the machine (in this case the totalizer adds up the inserted and accepted amount; secondly, by hand, after performing a special manipulation by means of the "reading" lever key and depressing a starting knob which, like the lever, is not accessible to the public. In hand operation

the machine does not sum up any longer, because the totalizer is inoperative, but prints the amount cashed up to that moment. Both cycles are controlled by the two counters mentioned under 9).

The difference between the two counters indicates the actual number of tickets delivered by the machine on accepting the money introduced by the public. The number of tickets multiplied by the fixed amount should exactly correspond to the figure printed on the ticket and check strip during a reading operation by and as mentioned above.

In reading and testing cycles for the purpose of setting the strips the machine delivers a ticket which is automatically annulled by well-visible signs or inscriptions; for instance, a red strip or the word "void" in red or a combination of this word with lines or other marks printed in red.

8. The machine is provided with two counters, one of which records the operating cycles of the machine including tests carried out for setting the strips adapted to form the tickets and the check record and for reading totals, while the other counter only records tickets delivered for testing or reading purposes.

9. When the machine is at standstill and in ready-for-operation condition, a white lamp burns and indicates this condition and also lights the instructions for use by the public. On starting the machine this white light goes out and a red lamp is switched on and burns as long as the machine operates, i. e. till the end of the cycle, which denotes that the machine works satisfactorily. At the end of the cycle, the white light is switched on again. If the red light is not extinguished, this denotes a failure in the machine. In this case, the coin slots are automatically blocked.

A further green light lights, while the white one is put off and the slots automatically close, when the ticket or check strip tears or is near the end. The device actuating the green lamps is arranged in such manner that it safely guarantees delivery of the ticket corresponding to the operation under progress, inasmuch as the feeler of said device is mounted at a distance from the point where the tickets are cut, which is greater than the length of a ticket.

10. A suitable device permits recovery of the coins by the public before automatic starting of the machine.

The machine and its operation shall now be described with reference to the accompanying drawings which diagrammatically show a construction of the machine. The machine is enclosed in a cabinet which comprises a foundation, a locked lid S' giving access to the coin magazine, and an upper portion which is provided on top with slots F, F'' for insertion of the coins; two inspection glasses H, H' through which the coins are exhibited as they are inserted and remain visible till the fixed value is formed; lamps G which automatically light on insertion of the coins, a board Q with the instructions for use lighted by a white light when the machine is inoperative but ready for operation, and which is lighted by a red light R when the machine performs its operating cycle or is not in ready-for-operation condition, and by a green light V when the ticket or check strip tears or fails. At the base of the top portion near the surface P, an outlet B is provided through which the coins inserted into the machine may be discharged by actuating the knob 122 before the machine starts. The top portion enclosing the various mechanisms and recording and printing means, is provided with a lid S, which is normally locked. This lid gives access to the "reading" lever, key T for hand-actuation of the machine and knob X (fig. 5) for setting the day and month to be printed on the ticket. It is also possible to actuate the knob 25 (fig. 8) which after mending or renewing the strip sets the slots F and F' free from the arms 17 and 15 that had automatically blocked them as a consequence of tear or failure of the paper. This automatic mechanism operates as follows:

Thes electromagnct 1 is energized by closure of its feeding circuit, produced by a feeler acting on the ticket or check strip when the latter tears or is near the end, but there is still a sufficient length for one ticket which corresponds to the operating cycle of the machine under progress. The electromagnet 1 (fig. 8) draws the armature 2 carried by a lever rocking about the pivot 3 and provided with a further arm 4 having a pivot 5 engaged by an eyelet 6 cut in the link 7, pivoted at 8 to the arm 9 of a four-armed lever rocking about the pivot 10. This four-armed lever has an arm 11 pivoted to the link 12 provided with an eyelet 13 engaging a pivot 14 secured to the arm 15 covering the slit F for the two dollar coins and rocking about the pivot 16. The four-armed lever further carries an arm 17 adapted to cover the slot F'' for thrusting in the one dollar coins. Obviously, when the armature 2 is drawn through the leverage described, the two arms 17 and 15 come over the coin slots F and block them.

A spring 19 presses against the fourth arm 18 of the four-armed lever the arm 20 of a lever rocking about the pivot 21, of which the other arm is connected through the link 22 to the bell crank lever 23 rocking about the pivot 24, and the other arm of which may be acted upon by the knob 25 not accessible to the public. On oscillation of the armature 2, when this is drawn by the electromagnet 1, the pawl arm 20 snaps behind the arm 18 of the four-armed lever, so as to keep it in the position in which the latter blocks the slot F'' by its arm 17. Similarly, the end of the arm 26 of the three-armed lever carrying the arm 15 hiding the slot F, is acted upon by the arm 27 of a lever rocking about 28 and subjected to the action of a spring 29.

When the armature is attracted by the electromagnet 1, the link 12 brings the arm 15 over the slot F, so that the pawl 27 snaps behind the arm 26 and the spring 29 keeps the arm 15 over the slot F in the same manner as the spring 19 keeps the arm 17 on the slot F'' even as energization of the electromagnet 1 ceases.

The attendant is warned by the green signal given by the lamp V which is switched on, and opens by means of a key the lid S of the machine, which gives access to the inner mechanism in which the paper is renewed or repaired. On completing this operation, before closing the machine, the operator presses the knob 25, lowering the arm or pawl 20 and setting free the arm 18 of the four-armed lever which, under the action of a spring 30, is rocked about its pivot 10 so as to uncover the slot F'' by its arm 17.

Before closing the machine and after depressing the knob 25, the attendant having renewed or mended the paper should move the "reading" lever L from the position shown in the drawing (figures 2 and 4) to a position normal thereto, by

rotating it through 90° either to the right or left over the green mark *v* or red mark *r*, depending upon whether the attendant is in possession of the longer or shorter key for reading a sub-total or a total respectively. In this position of the lever L the operator may operate the machine after depressing the key T (figs. 4 and 11) which is prevented from being lowered unless the lever L has been displaced, by a wheel situated under the key and formed with two cuts **31**, **32** (fig. 11) which, when they are brought under the key T, permit lowering of the latter, while in the other positions the key cannot be lowered because it soon strikes against the wheel on its portion deprived of cuts and the cuts **31**, **32** come under the key T on rocking to the right or left, respectively, of the lever L over said green and red marks.

When the key T is lowered, the machine is automatically started by electrical means. For this purpose, the key T (fig. 7) is provided with a lateral pin **32'** engaged by the notch **33** in a lever **34** rocking about the pivot **35**, and the other arm of which **36** is pivoted to a small stay **37**, of which the free end cooperates with a lever **38** rocking about the pivot **39** and carrying at its end the movable contact **43** adapted to close on the fixed contact **44** the electrical circuit controlling the electric motor actuating the machine on depression of the key T.

On operation of the machine, the cam-sector **45** (fig. 8) pivoted at **46** rocks to the left of the position shown in the drawing, and the roller **47**, carried by a link suitably guided and pivoted to an arm **49** of the lever carrying the pawl arm **27**, is lifted from the position shown in dotted lines, to which it had been brought on reception of the last coin forming the fixed value required for operation of the machine; consequently the pawl arm **27** is lowered, setting free the arm **26** of the three-armed lever, of which the arm **15** is moved under the action of the spring **50** away from the slot F, which is set free.

On automatic starting of the machine, the two slots F and F' are closed by the arms **15** and **102**, as will be described hereinafter, and the same cam **45** uncovers said slots at the end of the operating cycle of the machine.

*Operation of the machine.*—The machine has two slots F and F' for thrusting in the coins Mo which are guided in a suitable chute **53** (fig. 4) under the control of known devices for diverting false or unlegal coins, and form a visible pile which is exhibited through H and H', respectively (fig. 1).

The luminous check means for the coins thrust in and received by the machine are constituted by a set of lamps G six in the example shown, in which the ticket is obtainable at the cost of six dollars in 2 and 1 dollar coins. On introduction of each coin of the higher denomination, two upper lamps are switched on and project light downwardly and on insertion of each coin of the lower denomination, one bottom lamp lights up and projects light upwardly. In this manner, it is possible to form the full amount required for purchase of the ticket by thirteen combinations obtainable with the two different denominations.

The device for lighting the lights and controlling the slots F and F' so as to close the slit for the coin of higher denomination when coins for five dollars have already been introduced and close the other slit when the full value has been thrust in and accepted by the machine, and to reopen them automatically on completion of the operating cycle of the machine, is as follows:

Two electromagnets **51** and **52** (figure 9) are energized by the passage of each coin of the lower and higher denomination, by means of a device similar to the one shown in fig. 6, while, the coins slide in the chute **53** to the windows H and H'. The arm **54** of a lever pivoted at **55** comes within range of the chute, the other arm of said lever carrying the movable contact **56** which closes by the other fixed contact **57** the circuit of the electromagnet **51**, **52**, respectively, on passage of each coin of the lower and higher denomination, owing to the fact that the coins rock the arm **54**. The armatures **58** and **59** of the said electromagnets, that are drawn on flow of the current as each coin is thrust in oscillate the sectors **69**, **70**, respectively, by means of the links **60** and **61** (fig. 9) connected to the arms **62**, **63** of bell crank levers pivoted at **64** and of which the other arm **65**, **66**, respectively, has pivoted thereto the pawls **67**, **68**.

The pawls act on the sets of teeth **71**, **72**, respectively of said sectors. The lever ratios are such that the pawl **68** is carried along on a path which is twice that of the pawl **67**, so as to move the sector **70** twice as much as the sector **69**. The pawls **83** and **84** maintain the sectors in the positions reached on each current flow, while the bell crank levers resume each time their initial position.

The sectors **73**, **74**, respectively of insulating material (fig. 10) are positively connected to the sectors **69**, **70**.

The two sectors **73**, **74** carry a conducting leaf **75**, **75'** respectively, over their whole periphery and the sector **73** further carries two front curved conducting leaves **76**, **77**, respectively, extending beyond the sector **73** towards the other sector **74**. The latter is provided with a radial conducting leaf **78** carrying towards the sector **73** and opposite the leaf **76** a laminated projection **79**. Sliding contacts **80**, **81** rest on the leaves **75** and **75'** of the sectors **73**, **74** and are connected in the circuit of the electric motor M' driving the machine.

The leaf **77** is electrically connected with the motor actuating means and the leaf **76** is permanently to the leaf **75'**. Movements of the sectors **73**, **74** take place in such manner that when the fifth dollar has been inserted, the leaf **76** contacts on the projection **79** closing the circuit feeding the electromagnet **82** which moves in the manner described hereinafter the lever carrying the arm **15** closing the slot F for the introduction of the coin of higher denomination. A further displacement of the sector **73** causes the leaf **77** to contact with the leaf **76** and the motor circuit to close, whereby the machine performs its ticket delivery cycle in the manner that will be hereinafter described.

Successive displacements of the sectors **73**, **74** close contacts between extensions of the leaves **75**, **75'** over contact leaves $l_1$, $l_2$, $l_3$ . . . $l_6$ which connect in the circuit the check lamps G described above. As the sector **74** performs an oscillation which is twice that of the sector **73**, it closes on each movement the circuit of two lamps, while the other sector closes the circuit of one lamp only proceeding in an opposite direction so as to produce lighting in the above described

manner. When the operation is completed and the ticket has been printed and delivered and the amount cashed as will be described hereinafter, the machine should entirely resume its initial position illustrated above. The pawls 83, 84 (Fig. 9) that should retain the sectors 69 and 70 in the position they have reached on each impulse produced by the passage of a coin under the action of the pawls 67, 68 which, as said impulses cease, are released and returned by the levers 65, 66 to their initial position, cooperate with the tails of the pawls 67 and 68.

In order to vary at will the coin combinations within the maximum limit determined by the end positions of the selectors (delivery position), each sector (73, 74) is subjected to the action of a stepped cam (190, 191). Displacement of a stepped cam to a higher step, for instance to the next higher step, moves the corresponding sector by one step in the direction towards the delivery position. Therefore, the sector moves a step less for reaching said end position, in which its contact leaf comes into contact with the conducting leaf of the other sector, and resumes its initial position (zero position) which is nearer said end position by one step. A coin less should therefore be introduced in order to close the delivery circuit, when the other sector has not been similarly moved by its cam. By bringing one or both sectors towards or away from this position, it is possible to obtain any desired combination of coins by setting on the machine in an easy and rapid manner any other amount for the ticket to be delivered. The heigth of the cam steps is proportional to the displacement produced by a set of teeth on its respective sector; the cam steps 191 are therefore twice as high as the corresponding steps on the cam 190, so that rotation of the cam 191 through one step moves its respective sector twice as much as rotation of cam 190 through one step moves the sector 73.

The head of the rod 85 (Fig. 8) actuated by the lever 86 rocking about the pivot 87 and arranged under the tails of the pawls 67, 68 returns to its initial position the whole mechanism shown in Figures 9 and 10 at the end of an operating cycle of the machine. The lever 86 is provided with an arm 88 with which cooperated the arm 89 of a three-armed lever oscillating about the pivot 90 and provided with an arm 91, of which the end is subjected to the action of a cam 92 keyed on a shaft 93, which performs a rotation through 360° at each full operating cycle of the machine. In this manner, at the end of the cycle the cam 92 lifts the rod 85 which raises the tails of the pawls 67 and 68, releasing them from the corresponding toothed sectors and simultaneously actuating the tails of the pawls 83 and 84 and releasing them from said sets of teeth. The springs with which all the levers are provided, as shown, restore the entire mechanism at the end of the cycle.

As the fifth dollar is accepted by the machine, the circuit closes over the leaf 75' and projection 79, which feeds the electromagnet 82 closing through the arm 15 the slit F; on accepting the sixth dollar, by effect of the closure of the motor circuit through the contact established by the leaf 77 with the leaf 78 (Fig. 10), current is supplied also to an electromagnet 94 (Fig. 8), of which the armature 95, rocking about 96, lifts by means of its arm 97 and pivot 98 fixed thereto the link 99 provided with an eyelet and of which the other end is pivoted to the arm 100 of a three-armed lever rocking about 101 and provided with an arm 102 which closes the slot F' for the coins of lower denomination. The shorter arm 103 of this lever is acted upon at its end by a pawl 104 pivoted at 105 and provided with an arm 106 connected to the link 108, having at its other end an eyelet 109 engaging a pin 110 on an arm 111 fast with the above described pawl 27 that acts on the lever carrying the arm 15 closing the slot F for the two coins of higher denomination.

In this manner on starting the machine the slot for the coins of lower denomination may be closed, the slot F for the coins of higher denomination having previously been closed as a result of the introduction of coins up to 5 cents.

Rotation of the eccentric 92 of the machine at the end of each cycle releases from the pawl 27 the arm 26 of the lever carrying the arm 15 for covering the slot F whereby the arm 103 of the lever carrying the arm 102 closing the slot F' is also released through the connection established by the link 108 with parol 104.

After said release, the springs 50 and 50' rock the blocking levers setting the slots free. The pile of coins of the two denominations formed behind the inspection glasses H and H' of the machine, is supported by a member 112 mounted for oscillation about the pivot 46 and fixedly connected with the cam sector 45. The member 112 has a tail portion 113 acted upon by a relatively weak spring 114. The same pivot 46 has loosely keyed thereon a three-armed lever comprising an arm 115, which is pressed against a fixed stop 116 by a relatively strong spring 117 acting on the other arm 118, while the third arm 119 is provided with an adjustable stop 120 cooperating with the member 112.

The lever 89, 91 oscillating about the pivot 90 and acted upon by the above described cam 92 of the machine, is provided with an arm 121 which, as the cam is lifted, by raising the arm 113 produces at the same time as the already previously described operations an oscillation in the direction of the arrow $\alpha$ of the member 112. By effect of this oscillation the coins, laterally retained in the guides, slide along the side of said member 112 and fall along a shoot, not shown, into the magazine.

The machine is provided with means for permitting recovery by the public, if desired, of the coins, before the latter fall into the magazine. This means comprises a knob 122 (Figs. 1 and 8) projecting to the outside of the machine, provided with a lateral pin 123 and an end eyelet which engages a lateral pin on the previously described lever 86.

Pressure on the knob 122 first oscillates the lever 86 through the pin 124 engaged by the eyelet and then lifts the rod 85 restoring the light signalling mechanism for the coins inserted which, as the coins reach the full value, starts the machine, whereupon, under the action of the pivot 123 the three-armed lever is rocked against the action of the strong spring 117, so that the weak lever 114, no longer overcome by the former, acts on the arm 113 rocking the member 112 in a direction opposite that of the arrow $\alpha$ and the coins in the pile above said member slide in front of it and are delivered by suitable guides to the outside of the machine.

By unlocking the lid S of the machine, access is given to a knob X (Fig. 5) rotating about its axis and fixedly connected to a disc carrying numerals from one to thirty-one corresponding to the days of the month. Rotation is trans-

mitted, through a suitable gearing to a further disc concentric with the former, carrying on its periphery the names of the twelve months of the year, in order to switch over to the next month after all the days of the month have elapsed.

By operation of the knob X, the attendant may set every day through the inspection window the proper day and month and movement is transmitted from the two above mentioned discs to the printing rolls, loosely mounted on the same shaft 125 carrying a further printing roll 126 provided with a cam 127 (Fig. 11). The disc 126 is provided with three peripheral projections 128 adapted to print the letters TT meaning "total taking", a "numeral" corresponding to the number of the machine and, finally, the letters ST meaning "sub-total taking". These inscriptions are printed on the ticket and check strips, as will be hereinafter described.

Printing is effected by means of a printing roll 129 carried at the end of a bell crank lever pivoted at 130, of which the other end is connected by the link 131 to the bell crank lever 132 pivoted at 133, of which the other end is operated by the cam 134 that performs a full revolution at each cycle of the machine by which it is automatically actuated.

The cam 127 acts on the end of a lever 35 rocking about the pivot 136 and subjected to the action of a spring 137, said lever carrying a printing roll 138 fed by the inking roll 139 adapted to print a suitable sign or inscription, preferably coloured in red if the ticket is printed in black, in order to distinguish "void" tickets printed during the testing or reading operation. The paper C, from which the tickets are cut, unrolls from a spool 140, travels between feed rolls 141 after having moved over the feeler, not shown, adapted to signal tear or failure of the paper by lighting a red lamp and block the machine. As will be seen from the drawing, the paper strip travels under the printing rolls, including the roller 126 shown in the drawing and the roller 138 for the "void" mark. Cutting is effected automatically past the rollers 141 and ahead the printing rollers.

C' indicates the ribbon forming the check strips which unrolls from the spool 142 and is wound up on the roll 143 after having travelled over the printing roller 129. The rollers 142, 143 are mounted on a support fixedly connected with the bell crank lever pivoted at 130. The lever 130' performs two rocking movements at each cycle of the machine, as the cam 134 which performs one turn at each cycle, has two points as clearly shown in the drawing. The first oscillation produces print of the ticket which is immediately cut and expelled, the second oscillation prints the check strip at the end of the cycle of the machine, which is made possible by the fact that, as said above, the ticket has been expelled and the check strip is now free to be printed. A cam 144 is operatively connected to the cam 134 and acts on the arm 145 of a double lever pivoted at 146 and of which the arm 147 is provided with a radial eyelet 148. On the same pivot 146 a further lever 149 is loosely mounted and is provided with an L-shaped eyelet, of which an arm is radially directed and coincides with the arm 148 of the other lever, while the other arm 150 is arc-shaped and has its center on the pivot 146. The above mentioned eyelets engage a lateral pin 151 on a link 152 connected to the ends of the arm 153 of a three-armed lever 153 oscillating about the pivot 154 and on the other two arms 155 of which acts the double cam 156 actuated in the manner explained hereinafter, by the reading lever L on introduction of the key *Ch*. On fitting the key into the key-hole, and moving the lever L through 90° from the position shown in Fig. 4 to the right or left, the bevel gear 157 rotates through 90° the double cam 156 and oscillates the three-armed lever about 154, whatever the direction of rotation of the lever L is.

In the position shown, the cam 144 oscillates the arm 145 which advances by one figure by means of the lever 158 the counter Co counting all the tickets delivered by the machine, including void tickets.

In this position of the lever L the cam 144 does not move the lever 149 nor the counter Co', which is adapted to count only the tickets marked "void" delivered by the machine and is connected by the lever 159 to the arm 160 of the lever 149. When the lever L is rotated through 90° with respect to the position described, the lever 155 is rocked and lowers the link 152, of which the lateral pin 151 moves to the lower end of the radial eyelet 148 in the two levers 147, 149. Rocking of the arm 145 produced by the cam 144 also rocks the lever 149 with lever 147, thereby actuating the counter Co'. A toothed wheel 161 coupled to the toothed wheel 157 and actuated by the lever L as the key is fitted into it, meshes with a further toothed wheel 162 meshing in turn with a toothed wheel 163 having keyed on its pin 164 a cam 165 actuating the end of a lever 166 provided at the opposite end of a tooth 167 which, when lowered towards the tail 168 of the pawl 169, causes the latter to engage with the toothed wheel 170 actuating the amount counter; in the example shown, it records the six dollars every time the latter are introduced and the machine performs its cycle. The pawl is carried by a lever 171 which performs at each cycle of the machine a reciprocating rocking movement about its pivot 172 and is under the action of a spring 173 connecting it to the pawl tail. When the cam does not lift the arm 166 (position of the lever L rotated through 90° to the position shown in the drawing) the tooth 167 does not come within range of the pawl tail and the disc actuating the amount totalizer through the toothed wheel 170 does not come into action.

As shown by the enclosed drawing (Figs. 13, 14 and 15), the ticket bears the date (in the example "may 17"), the serial number of all the ample "May 17"), the serial number of all the operations which is visible, on opening of the lid S, also on the counter Co, this number being in the example shown 9735, further another number indicating how many grand-total readings have been effected on the machine, in the example 364 and 365, respectively, further, if the tickets are void ones, an indication as to whether in the operation in which the ticket has been delivered a total (Fig. 14) or a sub total (Fig. 15) has been taken or, in the case of valid tickets, the number distinguishing the machine (Fig. 13); finally, a number indicating, in the case of valid tickets, the figure corresponding to the amount actually accepted by the machine for delivering said tickets (in the example six dollars, consequently, the number 00006) and, in the case of "void" tickets, the figure appearing, at the time of delivery of the ticket, on the counter on the machine, not illustrated for simplicity's sake, from the last total taking effected on the machine, in the example shown 00018). As stated above, by omitting the coin insertion device and the device for automatic actuation through the

central mechanism, and by providing the machine with one or more keys T acting like the one described for hand actuation of the machine and corresponding to the various ticket values, for instance of cinemas, with the printing, numbering and checking devices of the above described type, the machine may be usefully employed for delivering tickets for the admission to public amusements.

It will be understood that the forms and constructional details of the various devices may be varied from what has been described and illustrated by way of example, leaving the characteristic principle unvaried, without departing from the scope of this invention.

BIAGIO BERIA.

PUBLISHED
MAY 18, 1943.
BY A. P. C.

B. BERIA

TICKET DELIVERING MACHINE

Filed Dec. 14, 1939

Serial No.
309,215
5 Sheets-Sheet 1

Fig. 1

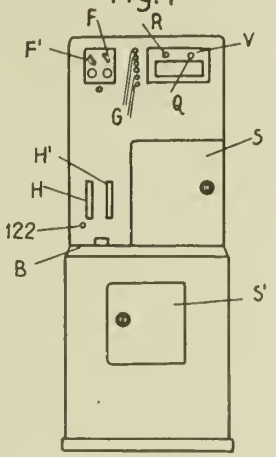


Fig. 2

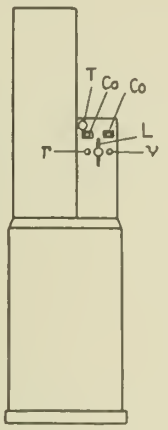


Fig. 5

Fig. 4

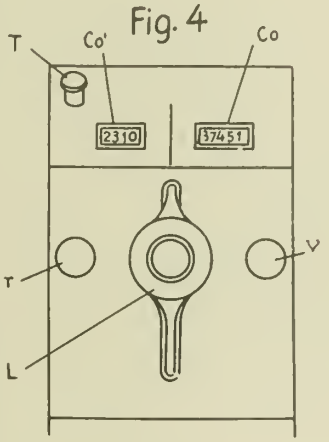


Fig. 3

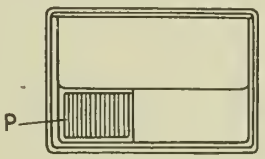


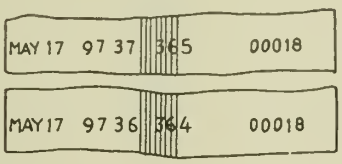


Fig. 14

Fig. 15

Fig. 13

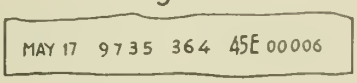


Inventor
Biapo Beria
By J. Feldman
Attorney.

PUBLISHED
MAY 18, 1943.
BY A. P. C.

B. BERIA

TICKET DELIVERING MACHINE

Filed Dec. 14, 1939

Serial No.
309,215

5 Sheets-Sheet 2

Fig. 8

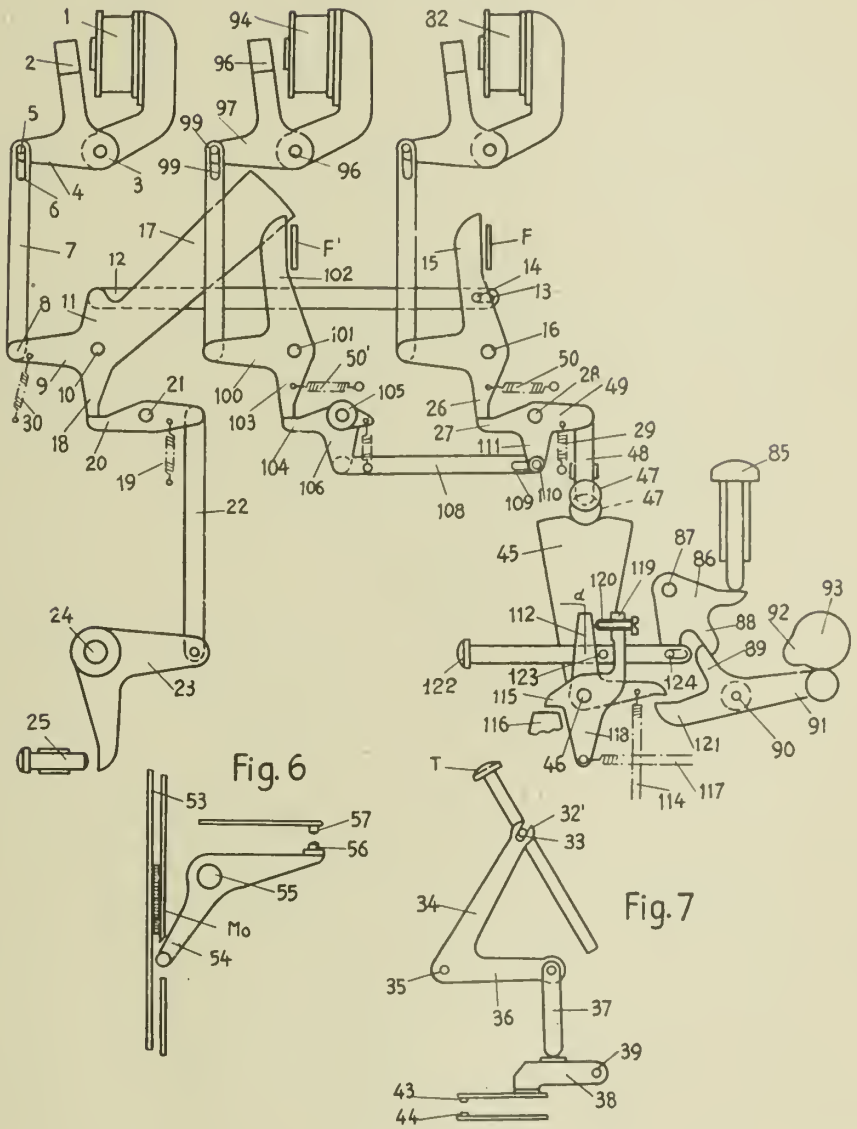


Fig. 6

Fig. 7

Inventor
Biagio Beria

By J. Trilleman
Attorney.

PUBLISHED
MAY 18, 1943.
BY A. P. C.

B. BERIA
TICKET DELIVERING MACHINE
Filed Dec. 14, 1939

Serial No.
309,215
5 Sheets-Sheet 3

Fig. 10

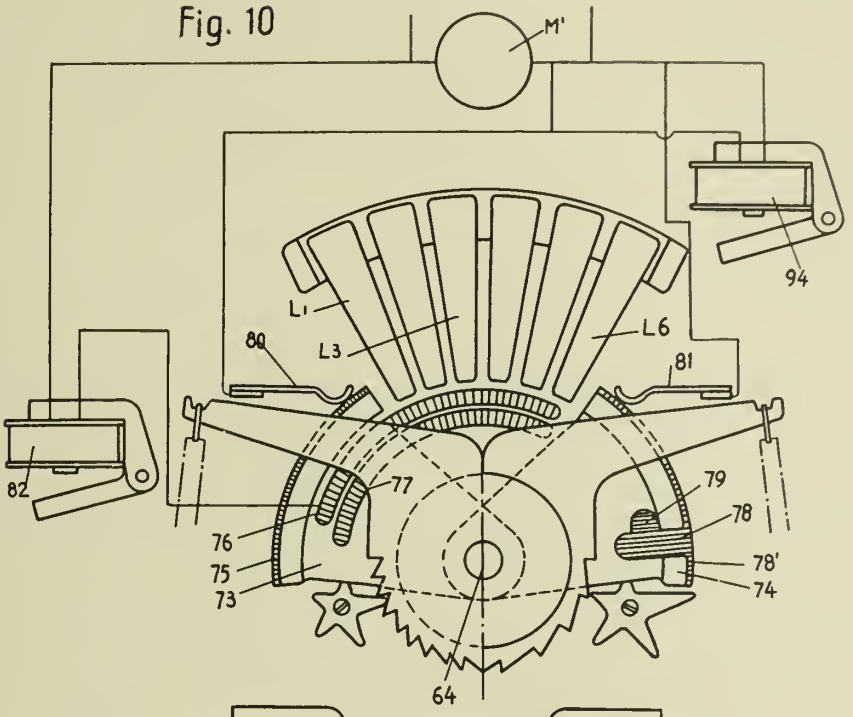


Fig. 9

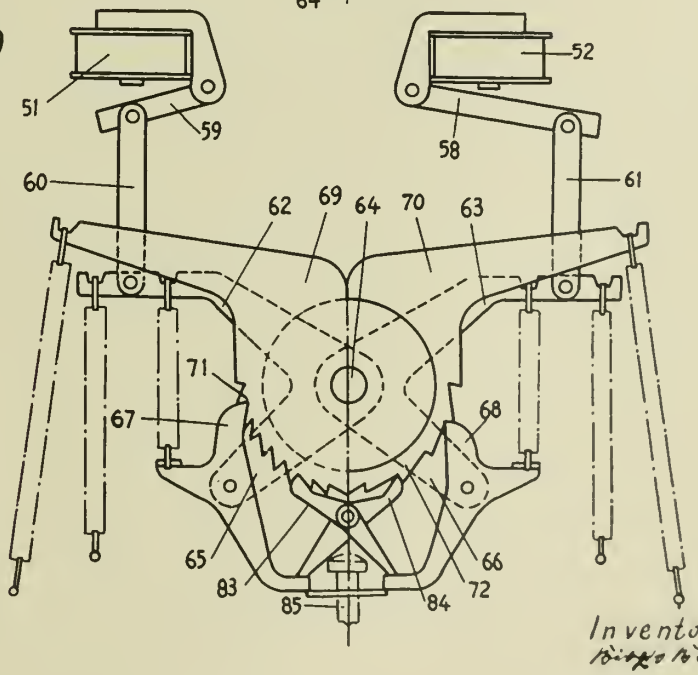


Inventor
Biago Beria

By J. Wilkinson
Attorney.

PUBLISHED
MAY 18, 1943.
BY A. P. C.

B. BERIA
TICKET DELIVERING MACHINE
Filed Dec. 14, 1939

Serial No.
309,215
5 Sheets-Sheet 4

Fig. 11

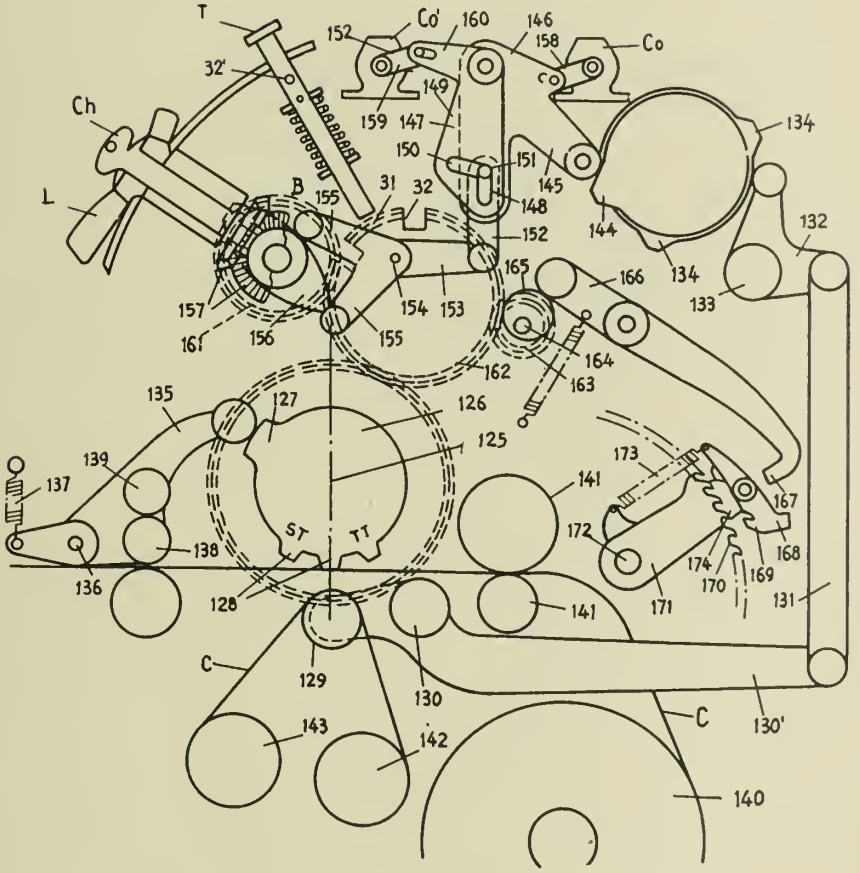


Inventor
Angelo Beria
By Attorney.

PUBLISHED
MAY 18, 1943.
BY A. P. C.

B. BERIA
TICKET DELIVERING MACHINE
Filed Dec. 14, 1939

Serial No.
309,215
5 Sheets-Sheet 5

Fig. 12

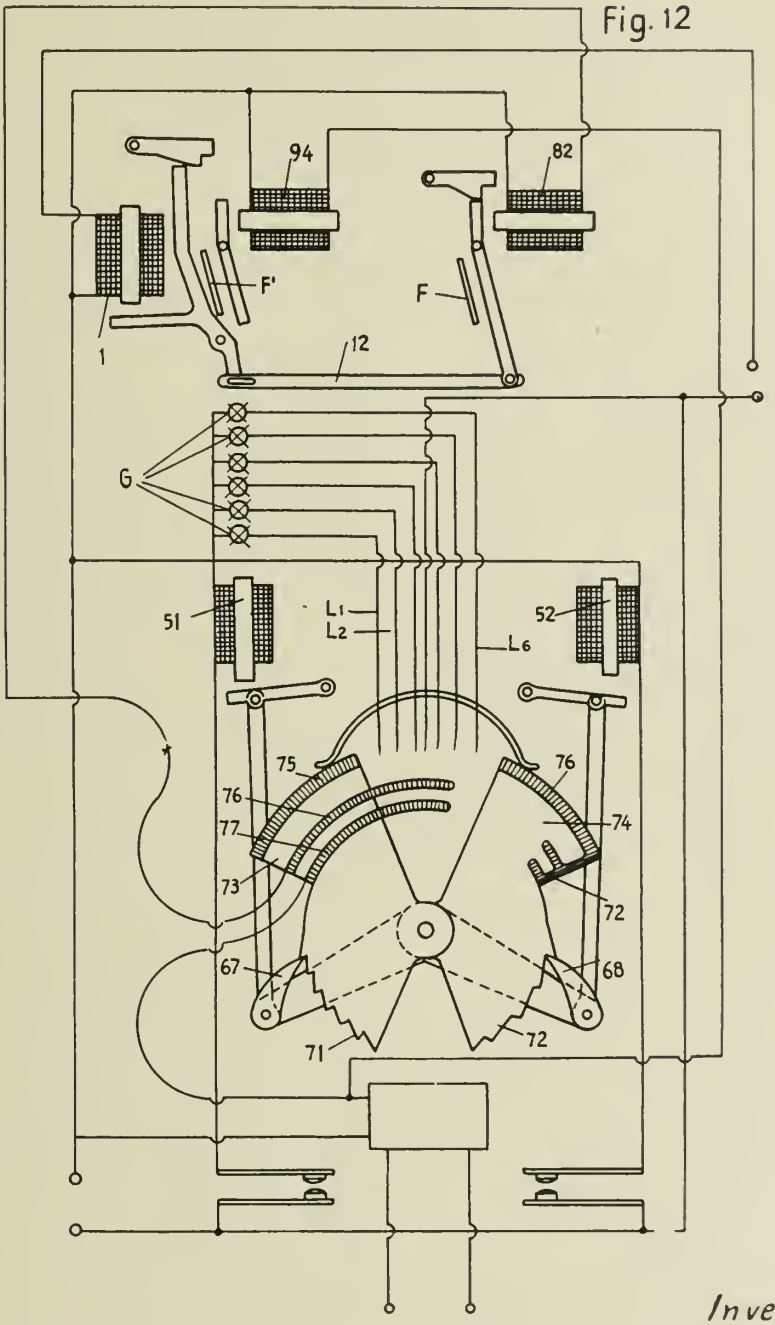


Inventor
Biagio Beria
By [illegible]
Attorney.

Published May 18, 1943 Serial No. 309,917

# ALIEN PROPERTY CUSTODIAN

## DISCONNECTING GEAR FOR VENDING MACHINES

Johannes Petersen, Aalborg, Denmark; vested in the Alien Property Custodian

Application filed December 18, 1939

The known disconnecting gears for vending machines work by the influence of the weight of the coin on the disconnecting gearing, which is often disadvantageous, as no goods can be had from the vending machine, unless the particular coin for which the machine is made is thrown in. Thus by these disconnectors the machine cannot be brought to work by throwing in a number of other coins representing the value of the goods in question. This disadvantage has been avoided by the present invention, which relates to a disconnector for vending machines, in which each coin thrown in forms part of an electric line connection, which is not fully closed until the sum of the coins represents the amount by which disconnecting may take place, irrespective of which coins are used.

The drawing shows:

Figs. 1 and 2 a disconnector according to the invention in top and side view respectively,

Fig. 3 a section on the line *a*—*a* in Fig. 1,

Fig. 4 a section on the line *b*—*b* in Fig. 2,

Fig. 5 a section on the line *c*—*c* in Fig. 3 and drawn to a larger scale than the other figures.

1 is a plate of insulating material, in which are formed a number of canals 2, 3, 4, 5 and 6, one for each kind of coin. Above this is arranged a funnel-shaped part 7 with corresponding rooms for the throwing in of the coins. In the plate 1 are fixed some stays 8, on which a plate of insulating material 9 is fixed. Further, a plate of insulating material 10 is movably arranged on the stays 8. Finally, on the utmost end of the stays a plate 11 is fixed, the kind of material of which is indifferent. To the plate 10 is fixed a strap 12, provided with a pivot 13 which passes through a hole of the plate 11 and is movable therein. Through the plate 11 is carried a rod 14, which is movable in the plate. Further, a stay 15 is fixed on the plate 11. Round a pivot 16 of this stay is movably arranged an arm 17, which passes into a slit—not shown in the drawing—of the pivot 13 and, besides, into a slit 18 of the rod 14. On the plate 11 is further fixed a rail 19, on which is movably arranged a rod 20 furnished with a slit 21, through which a fixed pivot 22 of the rail 19 passes. Further, the rod 20 has a slit 23, through which the rod 14 passes. Between the pivot 22 and a fixed pivot 24 of the rod 20 a spring 25 is inserted. On the rod 14 is fixed a key 26 which passes into the slit 23. On the pivot 12 is fixed a boss 27. The arm 27 is kept out from the plate 11 by the influence of a spring 28 round the pivot 13 and a spring 29 round the rod 14.

When the vending machine is to be used, the coins are thrown, each into its room of the part 7. By way of example we take a price of 1 krone for the article in question. Disconnection can then be obtained by throwing in either one 1 Kr. piece or two 50 öre pieces or four 25 öre pieces or two 25 öre and one 50 öre pieces or 2 25 öre and five 10 öre pieces.

If a 1 Kr. piece is thrown in, this will glide through the canal 2 and reach off two movable pins 30 and 31 respectively. If then a button 32 of the rod 14 is pressed, the rod 14 will be pressed inwards, and the arm 17 will then press the pivot 13 with the strap 12 and the plate 10 inwards, so that the pins 30 and 31 will be pressed against the coil. Hereby the electric current is closed, which from a source of current—not shown in the drawing—through a line 32 is carried to a rail 33 fixed on the plate 10, from there through a line 34 to a contact spring 35 which is in contact with the pin 30, then through the coin to the pin 31 and to a contact spring 36, which is in contact with the pin 31 and in conducting connection with a rail 37 fixed on the plate 10, and from this through a line 38 to a rail 39 of the plate 10, from where the current through a line 40 returns to the source of current. The circuit thus closed furthermore passes through a magnet or other electric contrivance—not shown in the drawing—which can operate upon the disconnecting gear of the vending machine.

If the question is of disconnecting the vending machine by four 25 öre pieces, the coins are thrown into the canal 4. The bottom coin will stop off two pins 41 and 42 respectively. To disconnect the machine by this coin only will now prove impracticable, as the electric circuit will not be closed. The electric current through the line 32 and the rail 33 will pass through a contact spring 43 to the pin 41, then through the coin to the pin 42, from where it can get no further. If then another 25 öre piece is put into the canal 4, it will stop off two pins 58 and 59 respectively. If disconnecting is then tried, the current will go from the line 32 through the rail 33 through a contact spring 57 to the pin 58, through the coin to the pin 59 and from there through a contact spring 60 to a rail 45 of the plate 10. From the rail 45 the current proceeds through a line 46 to a rail 47 of the plate 10. Then the connection is cut out, so that disconnecting can take place. If then two 25 öre pieces more are put into the canal 4, disconnecting can take place, as the current from the line 32 through the rail 33 proceeds to a contact

spring 50 and from there to a pin 48 through the top coin to a pin 49 and from there through a contact spring 51 to a rail 52 of the plate 10. From the rail 52 the current goes through a line 53 to the rail 39 and further to the line 40, so that disconnecting of the vending machine can take place.

If the question is of disconnecting the vending machine by means of two 25 öre pieces and one 50 öre piece, two 25 öre coins are thrown into the canal 4 and one 50 öre coin into the canal 3. The electric putting in circuit will now be effected in the following manner: Through the line 32 to the rail 33, from there through the contact spring 57 to the pin 58, through the coin, the utmost 25 öre coin, to the pin 59, the contact spring 60, the rail 45, the line 46, the rail 47, a contact spring 61, a pin 62, the 50 öre coin, a pin 63, a contact spring 64, the rail 37, the line 38, the rail 39 and the wire 40.

The drawing shows several pins and contact springs, which are not provided with reference figures, as they are not mentioned in the specification. These serve the purpose of forming other connections than the examples given, when other coins are used or other prices of the commodities are in question.

By the pressing of the plate 10 the funnel 7 is pushed in over the plate 1, thereby covering the coin-canals of it, so that it will not be possible by pressing in the plate 10 when no coins have been thrown in, by which the pins in question will also be pressed slightly into the canals, to form circuit-closing by means of a single coin brought into contact with the upper pins.

The above-mentioned pins are movably arranged in the plates 9 and 10 and, likewise, they go movably into the plate 1 to the respective coin-canals. As stated above, the pins will be pressed inwards together with the plate 10. When the pressing in of this plate ceases, the pins will return under the influence of some springs 54 arranged round the pins and set under the pressing in.

The examples described above all deal with 1 krone as the price of the article in question, but by changing the electric lines and using some other pins and contact springs the disconnecting can easily be altered so as to be effected in connection with other sums of coins and, consequently, for other prices of the goods.

In order to make the disconnector small so as not to take up too much space in the vending machine, the canals 2–6 are not all placed side by side, but are arranged in stories.

Under the canals 2–6 is movably arranged a flap 55, which, under the influence of a spring—not shown in the drawing—is held up against the plate 1 and preventing the coins from falling out. On the flap 55 is fixed an arm 56, which can be connected with the device—not shown in the drawing—for the throwing out of the article, so that the flap 55 is opened and allows the coins to drop into a box—not shown in the drawing—together with the throwing out of the goods.

Under the pressing in of the rod 14 and the pivot 13 the broader part of the key 26 will be pressed out from the slit 23, whereby the spring 25 can pull the rod 20 to the left, by which when the pivot 13 with the boss 27 has also been pressed inwards, it will go in under the boss 27 and prevent the pivot 13 from returning at once after the pressing in has ceased. Not until the key 26 has moved backwards so much that it can press the rod 20 away from the boss 27 will the pivot 13 together with the plate 10 be able to move back, which happens all of a sudden, by which contact breaking spark by the breaking of the electric current is avoided.

JOHANNES PETERSEN.

PUBLISHED
MAY 18, 1943.
BY A. P. C.

J. PETERSEN

DISCONNECTING GEAR FOR VENDING MACHINES

Filed Dec. 18, 1939

Serial No.
309,917

2 Sheets-Sheet 1

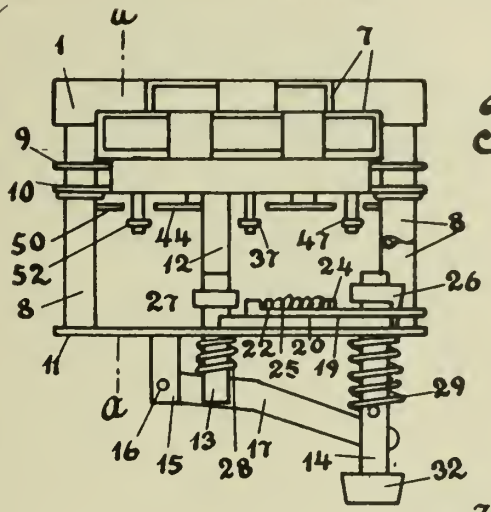


Fig.1

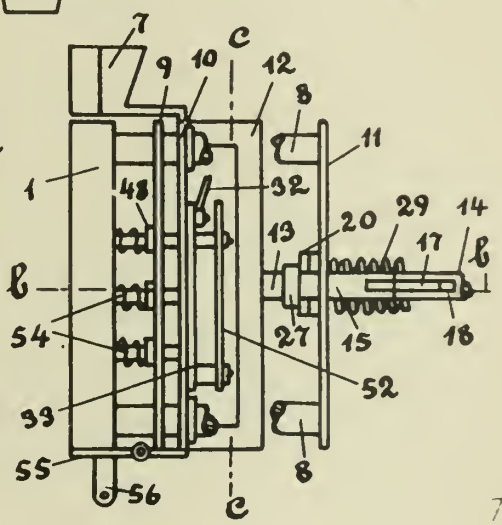


Fig.2

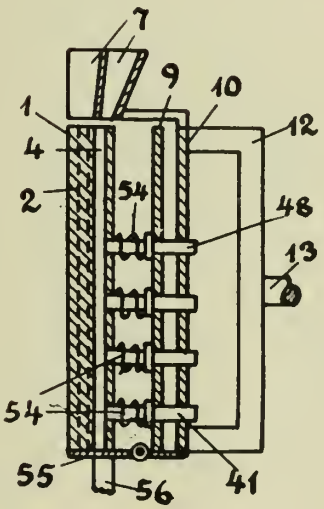


Fig.3

Inventor:
Johannes Petersen
By Young, Emery & Thompson
Attorneys

PUBLISHED MAY 18, 1943. BY A. P. C.

J. PETERSEN

DISCONNECTING GEAR FOR VENDING MACHINES

Filed Dec. 18, 1939

Serial No. 309,917

2 Sheets-Sheet 2

Fig. 4

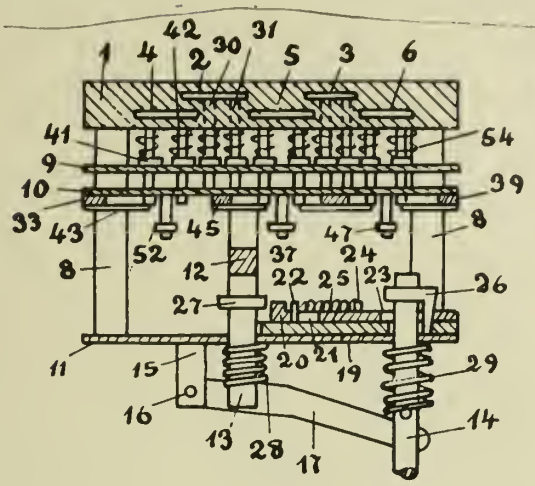


Fig. 5

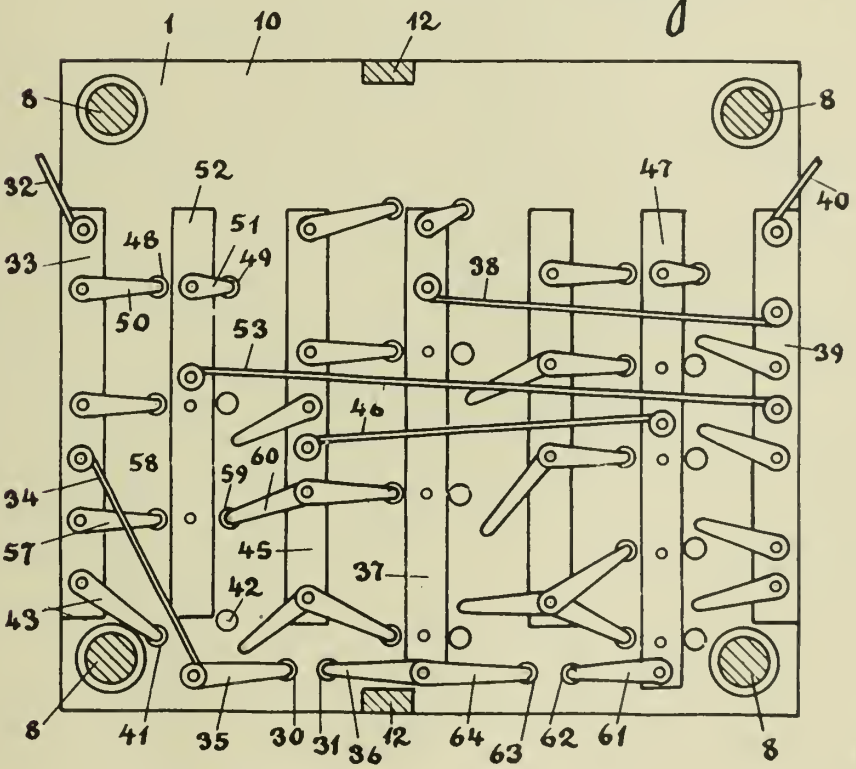


Inventor:
Johannes Petersen
By Young, Emery & Thompson
Attorneys

Published May 18, 1943

Serial No. 311,314

# ALIEN PROPERTY CUSTODIAN

## VIBRATING CONVERTER

Alfred Leifer and Friedrig Schilgen, Berlin, Germany; vested in the Alien Property Custodian

Application filed December 28, 1939

In a vibrating converter or vibrating rectifier the vibrating flat spring carrying the moving contacts generally consists of steel. The spring thus possesses a certain magnetic permeability, a certain electric conductivity and the necessary mechanical elasticity.

In accordance with the present invention the properties of the vibrating spring as regards permeability, electric conductivity and elasticity are substantially enhanced in that the flat spring is composed of at least two layers on which the one consists of a material which has a high permeability while the other layer consists of a material having a high electric conductivity and favorable mechanical elastic properties, more especially spring bronze.

An example of construction embodying the idea of the invention is shown in the figure. The oscillating spring F of the vibrating converter consists of two thin layers *a* and *b* which are welded together or soldered together or simply riveted and of which the one (*a*) consists of soft iron while the other one (*b*) consists of spring steel or which is even better of spring bronze. The layer formed of soft iron provides a high resultant permeability of the flat spring thus establishing a favorable magnetic closing of the field of the exciter coil E by the strap B and the flat spring F. The part consisting of spring bronze assures a high conduction so that the current heat transmitted to the spring will be low. At the same time there can be attained a sufficient elasticity without subsequent effects. This is assured more especially if the layer (*a*) composed of soft iron is substantially thinner than the layer (*b*) made of spring bronze.

ALFRED LEIFER.
FRIEDRIG SCHILGEN.

PUBLISHED
MAY 18, 1943.
BY A. P. C.

A. LEIFER ET AL
VIBRATING CONVERTER
Filed Dec. 28, 1939

Serial No.
311,314

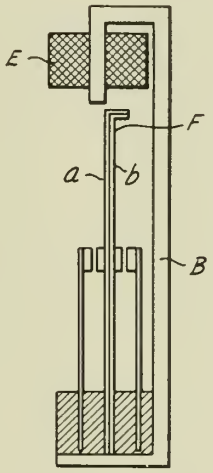


INVENTORS
ALFRED LEIFER AND FRITZ SCHILGEN
BY H. S. Brower
ATTORNEY.

Published May 18, 1943 Serial No. 311,694

# ALIEN PROPERTY CUSTODIAN

## DEVICE FOR MEASURING DISTANCES BY THE ECHO SOUNDING METHOD

Robert Wellenstein and Werner Holle, Bremen, Germany; vested in the Alien Property Custodian

Application filed December 29, 1939

In measuring distances by the echo sounding method, it is endeavoured to let the individual soundings succeed each other as rapidly as possible in order to obtain the closest possible progression of indications. However, the soundings must not succeed each other so rapidly that the individual measurings temporarily overlap each other, as otherwise the clearness of indication is lost.

In devices for measuring distances by the echo sounding method operating with a time measuring instrument for determining the running time of the sound, it has been proposed to provide a hand operated switch in order to be able to change over to a more rapid or to a slower succession of soundings according to the magnitude of the distance measured. Simultaneously with the change in the rate of the succession of soundings, the measuring range or the time measuring and indicating device is changed. In addition, it is necessary, in order to avoid wrong indications when using a rapid succession of soundings, to change over to a slow succession of soundings, from time to time, for making sure whether the indication is clear.

It has also been proposed to do without the time giver and to start the sound impulses directly by the echoes, whereby the frequency of soundings serves as a measure for the distance. Though in this way the quickest possible succession of soundings may be obtained, there results an inappropriately rapid succession of soundings in the case of small distances. For, it is of no use to sound more rapidly than the instrument is capable of adapting itself to. With airplane echo soundings, in which gas oscillation generators are used as sound transmitters, an excessively rapid succession of soundings also results in an unnecessarily high consumption of compressed air and, therefore, an undesirably high weight of the compressed air plant, whether operated with compressed air plant, whether operated with compressed air cylinders or with an air compressor. Moreover, frequency measuring for landing altimeters is also unsuitable, as in this case measurings of down to about 0.5 Hertz are necessary for comparatively low altitudes.

According to the present invention, all these disadvantages are avoided with an echo sounding device having a time measuring instrument for measuring the running time of the sound by automatic regulation of the succession of soundings, effected by a device adjusting itself according to the distance to be measured. This kind of regulating the succession of soundings combines the advantages of the known frequency method with those of echo sounding with fixed or manually switched succession of soundings by automatically increasing the succession of soundings when the distances to be measured are decreasing, but, in contradistinction to the frequency method, only to an extent which will enable an improvement of the accuracy of measurements.

The member adjusting itself according to the distance and regulating the succession of soundings may itself be adjusted by the arriving echoes via the time measuring instrument. On the other hand, it may be adjusted by an independent distance measuring device, for example in the case of airplane echo sounding by means of a barometric altimeter.

If the succession of soundings is regulated by the arriving echoes, this may, for example, be effected by automatically slowing down the succession of soundings at a certain interval when echoes are not arriving, whereas this slowing down is prevented by the echoes arriving within the respective interval.

The regulation of the succession of soundings may be effected with or without changing the measuring range; moreover, it may be effected continuously or by jumps. If the sounding is slowed down beyond the measuring range, it is advisable also to interrupt the indicating preparedness.

In order to avoid that the succession of soundings is altered by rapidly passing changes of the distance, as will be the case when flying over buildings or trees, or by singly occurring disturbing impulses, which may result in overlapping of the indications, the regulating device is preferably arranged so that with decreasing distance the succession of soundings is adjusted with delay to the new value of the succession of soundings corresponding to the shorter distance. As the danger of overlapping only exists with rapid succession of soundings, the device may advantageously be arranged so that with increasing distance the succession of soundings will adjust itself, without substantial retardation, to the slower value.

Moreover, it may be advantageous, especially in the case of a succession of soundings regulated by the echoes for measuring altitudes in airplanes, where there is a particularly great danger of overlapping caused by frequently occurring sudden changes of altitude, to automatically influence the succession of soundings according to the changes of the distance at a certain interval, for example, each time unit.

If the succession of soundings is regulated by the echo, there is a danger of disturbing impulses influencing the succession of soundings in such a way that continuous overlapping of the indications will occur. By a suitable rate or regulation of the transmitting retardation, the danger of overlapping owing to the action of disturbing impulses may be effectively prevented, and according to the invention this may be achieved by arranging or regulating the transmission device in such a way that the time of retardation increases with the running time of the sound. Thus, the emission of a sound caused by any disturbing impulse is retarded long enough as not to be effected, even for the greatest distance to be measured, before the return of the echo belonging to the previous sound impulse. In order to obtain a comparatively rapid succession of soundings for small altitudes, in spite of the transmitting retardation, the sensitivity or the degree of amplification of the receiver may be gradually increased in known manner, beginning with the sound emission, up to a maximum value. In the retardation, it is then merely necessary to consider disturbing impulses within the time range of full sensitivity, as the disturbing impulses, whose intensity generally depends upon the altitude, cannot become effective in the range of decreased sensitivity with a sufficient intensity of the transmitting impulse or of the echoes.

The retardation, depending upon the altitude, may be obtained by correspondingly influencing the transmitting time circuit, for example by regulating the time constant.

The danger of overlapping owing to disturbing impulses may also be reduced or prevented by starting the sound impulses in a first range immediately following the sound emission in a succession regulated by the echoes, but uninfluenced in the subsequent upper range by the arriving echoes in a succession arbitrarily determined by a special time circuit or the like. For the range of a fixed succession of soundings there is no danger of overlapping, as the succession of soundings in this range is prevented from being influenced by arriving impulses. In the lower range, in which the succession of soundings is regulated by the arriving impulses, the disturbing impulses may be made harmless by letting this range coincide with the range of reduced receiver sensitivity.

In order also to obtain in the range of the fixed succession of soundings the most rapid possible succession of soundings, but nevertheless to avoid overlapping by echoes arriving at greater altitudes, a device may be provided by which the following transmitting impulse is suppressed or delayed until there is no more danger of overlapping.

Several constructional examples of the invention applied to landing altimeters for airplanes operating by the echo sounding method are illustrated diagrammatically in the drawing in which:

Fig. 1 is a diagram of connections of a first form of construction with a rotating potentiometer as time giver and graded regulation of the succession of soundings,

Fig. 2 is a modification of the connections according to Fig. 1,

Fig. 3 is a connection with a condenser as time giver, with motor operated transmitting contacts, and with graded regulation of the succession of soundings,

Fig. 4 is a connection with a condenser as time giver, with time circuit operated transmitting contacts, and with continuous regulation of the succession of soundings,

Fig. 5 is a connection with a condenser as time giver, with time circuit operated transmitting contacts, and with graded regulation of the succession of soundings,

Fig. 6 is a modification of the connection according to Fig. 1,

Fig. 7 is a modification of the connection according to Fig. 4,

Fig. 8 shows diagrams illustrating the action of the connection according to Fig. 7,

Fig. 9 is a modification of the connection according to Fig. 7,

Fig. 10 shows diagrams corresponding to Fig. 8 for the constructional example illustrated in Fig. 9,

Fig. 11 is a connection with a condenser as time giver, with time circuit operated transmitting contacts, and with combined continuous and graded regulation of the succession of soundings,

Fig. 12 shows diagrams corresponding to Figs. 8 and 10 for the constructional example according to Fig. 11,

Fig. 13 is a modification of the connection according to Fig. 1 with delayed regulation of the succession of soundings,

Fig. 14 is a modification of the connection according to Fig. 4, with delayed regulation of the succession of soundings,

Figs. 15 and 16 are modifications of the connection according to Fig. 14,

Figs. 17, 17*a*, and 17*b* are a modification of the connection according to Fig. 4,

Fig. 18 shows diagrams illustrating the action of the connection according to Fig. 17,

Fig. 19 is a connection for avoiding different regulating voltages influencing each other,

Fig. 20 shows diagrams of the action of the connection according to Fig. 19,

Fig. 21 is a connection according to Fig. 7 in a somewhat different form of construction.

In the drawings, A indicates the place where the electric impulses of the echoes enter the connection illustrated.

The devices illustrated by way of example serve to determine the altitude of airplanes especially when landing. They are operated by the known echo sounding method. The period between the emission of a sound impulse and the return of the echo from the surface of the earth is used as a measure for the distance to be determined.

The device substantially consists of a sound transmitter, a receiver and an indicator for the echoes, and a time measuring device for determining the running time of the sound.

In the example illustrated in Fig. 1, the transmitter consists of a whistle **1** operated by compressed air. At regular intervals a cam disc **2**, operated by a motor not illustrated, closes the contacts **3**, **4**; thereby the whistle is connected for short periods to a source of potential and is thus caused to emit a short, sharply defined sound impulse.

There are provided two pairs of contacts **3** and **4** arranged 180 degrees apart, the pair **4** being disconnectable by a switch **5**. When the switch **5** is closed, two sound impulses are emitted on each revolution of the cam disc, whereas only one sound impulse is emitted on each revolution when the switch **5** is open. If the period for one revolution of the cam disc amounts to 1.3 sec., there

will be emitted one sound impulse every 1.3 sec. with the slow succession of soundings, whereas this will occur every 0.65 sec. with the rapid succession of soundings. As the next sound impulse must not be emitted before the return of the echo, in order to obtain a clear indication, the interval between two soundings will determine the respective measuring range of the altitude. As the distance covered within 1.3 sec. in air is about 400 metres, the slow succession of soundings corresponds to a measuring range of 200 metres, whereas the rapid succession of soundings is only applicable to altitudes of 0 to 100 metres. Changing over from slow to rapid succession of soundings is effected automatically according to the respective altitude of flight by means of a device which will be described later on.

The time giver is a rotating potentiometer which is provided with two sliding arms 6 and 7 revolving in equal time with the cam disc 2, the voltages applied to the contacts of the collector 8 being transferred by the sliding arms 6 and 7 via a switch 9 and a switching relay 10, operated by the echo, to a voltmeter 11, for example a tube voltmeter. At the moment of the arrival of the echo, the voltage corresponding to the respective position of the sliding arm 6 or 7 is applied by short-period closing of the relay 10 to the tube voltmeter 11 and is retained by a condenser 12 until the next indication of the voltmeter is effected. The indicator circuit 13 is connected via the switch 9 always only to one of the two sliding arms 6, 7 of the potentiometer, the circuit 13 being connected to the single sliding arm 6 in case of slow succession of soundings, and to the double-armed sliding arm 7 in case of rapid succession of soundings.

The sliding arm 6 slides on the outside and the sliding arm 7 on the inside of the collector 8. In order that always only one of the two arms of the sliding arm 7, serving for the rapid succession of soundings, should be in contact with the collector, the one half of the inside of the collector corresponding to the measuring range of 100 to 200 metres is covered by an insulation 14. Therefore, the entire voltage range corresponding to the measuring range 0 to 200 metres in the sliding arm 6 is run through once during one revolution, whereas in the case of the double sliding arm 7 the one half of the voltage range corresponding to the measuring range of 0 to 100 metres is run through twice during one revolution.

The switching of the transmitter and of the time giver by the contacts 5 and 9 is effected automatically by means of a relay 15, which is operated by the echo (contact 16) via a preparing contact device revolving in equal time with the cam disc 2 and the sliding arms 6, 7 of the time giver according to the moment of the arrival of the echo in one direction or the other. In the example illustrated, this contact device consists of two contact arms revolving synchronous with the cam disc 2, a single arm 17 for the slow succession of soundings co-operating with a contact path 18 which extends over the entire measuring range of 0 to 200 metres, and a double arm 19 co-operating with a semicircular contact path 200 corresponding to one half of the measuring range. Each of the two contact paths 18 and 200 is subdivided into two contact strips 181, 182, 201, 202 insulated with respect to each other, of which the strips 181 and 201 extend, for example, over the range of 0 to 25 metres, and the strips 182 and 202 over the range of 25 to 200 metres or of 25 to 100 metres. There is always only one of the two contact arms 17 or 19 connected in the circuit of the echo contact 16. Changing over to the one or the other contact arm is effected by means of a switch 21, which is operated by the relay 15, the same as the switches 5 and 9. The contact strips 181 and 201 are connected to a winding 22, and the contact strip 202 is connected to a winding 23 of the relay 15 acting in opposite direction.

Moreover, the relay is connected to a third winding 24, which acts in the same way as the winding 22 and which is in connection with the disconnectable transmitting contact 4. The winding serves as holding coil when the armature is attracted in using rapid succession of soundings.

The action of the device is as follows: In the position of the switch 5, 9, and 21, assumed in the drawing, the device is operated with slow succession of soundings. Of the contact arms 17 and 19, only the contact 17 is operative. Then the winding 22 in the range of 0 to 25 metres is connected, attracting the switching contacts 5, 9, and 21 when energized.

When the airplane is going to land, it will first enter the upper range of 25 to 200 metres. Upon arrival of echoes in this range, the switches will remain in their left positions. As soon as the altitude decreases below 25 metres, the first echo arriving in this range will throw the contacts 5, 9, 21, owing to a current impulse through the winding 22, into the position for rapid succession of soundings. Thus, the coil 24 will also be energized and will cause the armature to be held in the attracted position. Now, the double-armed contact 19 of the switching device will co-operate with the contact path 201, 202. As long as the echoes continue to arrive in the range of 0 to 25 metres, the switch position will be retained. But if the altitude increases again, owing to rising of the airplane or to unevennesses of the surface of the land, the first echo arriving in the range of 25 to 100 metres will, by a current impulse through the coil 23, cause switching over to slow succession of soundings. In this way, perfectly automatic switching over to rapid or slow succession of soundings is effected according to the altitude of flight.

If, in flying over a building or a steep slope, the altitude of flight suddenly changes from the 25 metres range to the range above 100 metres without an echo having entered the range of 25 to 100 metres, the desired switching over to slow succession of soundings would not be effected. In the example illustrated this case is already practically avoided by the fact that the lower range is made three times as small as the following upper range (25 to 100 metres) for switching over to slow succession of soundings. A jump from below 25 metres to above 100 metres will usually not occur in landing.

Figure 1 shows a second solution for avoiding a wrong indication in this case. A special relay winding 25 is provided, being in connection with the source of voltage via a switch 26 and a contact 28, which is introduced for a short period at or just before each sound emission, for example by means of a cam disc 27, and via a polarized relay 29, switched on by the transmitting impulse and switched off by the echo. This device serves, when using rapid succession of soundings, to automatically switch over to slow succession of soundings if up to the end of the 100 metres range no echo has arrived. If the echo arrives in the range of 0 to 25 metres, switching

over to slow succession of soundings is prevented by disconnecting the relay 29. Instead of providing a special winding 25, it is of course possible to use the winding 23 for this purpose too.

Changing over the succession of soundings may, of course, be effected in connection with other time measuring and indicating devices.

Instead of controlling the switching relay via a special time giver contact device, it is possible, as illustrated in Fig. 2, to use the voltage given by the potentiometer 6, 7, 8 (collector with sliding arms) at the moment of the arrival of the echo, for example via a special tube voltmeter 36 for operating the switch relay 15, 151, as this, when exceeding or sinking below a certain voltage, will let the switching contacts 5, 9 fall off or will attract them respectively. Also with this connection a holding winding 24 may be provided. The voltage for operating the switching relay may, if desired, be derived from the tube voltmeter 11 serving to indicate the altitude. In this case, it is advantageous that the relay used requires equal flows for attracting its armature and for letting it fall off, in order to obtain equal attracting sensitivity for both switching devices. so that changing over to rapid as well as to slow succession of soundings is effected with about the same voltage valuc or at the same altitude of flight.

Instead of operating two transmitting contacts, sliding arms, or contact arms from one shaft, several deviations with corresponding different numbers of revolution may be provided for the various successions of soundings. Instead of electromagnetic relays, tube relays may be used. Moreover, it may be advantageous not to prepare the switching by a time giver contact device and to cause it by the arriving echo, but, inversely, to prepare the switching by the arriving echo and to cause it by time giver contacts.

In the connections according to Figs. 3 to 5, the time giver is a condenser 61 which is charged via a resistance 81 by a voltage 71, and which is discharged on every sound emission by short circuit via the transmitting contacts 3, 4. In this case, the voltage of the condenser 61, at the moment of the arrival of the echo, is used as a measure for the time which has elapsed since the sound was emitted, or for the distance covered by the sound.

Otherwise, the connection according to Fig. 3 is the same and acts in the same way as the connection according to Fig. 1.

In the constructional example illustrated in Fig. 4, the whistle is not operated by revolving contacts or cams, but by a relay 221 with a transmitting contact 231. The relay 221 with the transmitting contact 231 has a coil 241. This coil lies in a double time circuit 251 consisting of a source of voltage, a condenser 261, and two charging resistances 271 and 281. Parallel to the condenser 261 and to the relay coil 241 there is a gas discharge tube 291 which ignites as soon as the condenser 261 exceeds a certain maximum voltage. Upon ignition of the glow tube 291, a strong current impulse occurs in the relay coil 241, closing the transmitting contact 231 and thereby releasing the sounding impulse. Then the glow tube 291 extinguishes, the condenser 261 is recharged by the quenching voltage, and the operation starts from the beginning.

Of the two resistances 271 and 231, the resistance 271 is constantly connected in the time circuit 251. The second resistance 281, however, may be switched on or off by a switching contact 301. When switching on, the two resistances 271 and 281 lie parallel to each other.

In the two constructional examples illustrated in the drawing (Figs. 4 and 5), the resistance 281 is switched on and off in different ways.

In the constructional example according to Fig. 4, the resistance 281 is regularly switched on with each sounding by the arriving echo by means of the relay coil 311, and it is switched off upon a sound emission by a second coil 321. Naturally, the time circuit condenser 261 is charged more rapidly when the resistance 281 is switched on, than if the charging is effected merely via the resistance 271. Thus, in switching on the resistance 281 by the arriving echo, the period for reaching the ignition voltage, i. e. until the next sound is emitted, is shortened, and this shortening will be noticed all the more, the sooner the echo arrives. Up to the arrival of the echo, the charging of the condenser 261 is effected according to the time constant determined by the resistance 271, but after the arrival of the echo according to the time constant determined by the combination resistance 271—281. The magnitude of the resistance 281 or of the combination resistance 271—281 determines the earliest moment when, after each sound emission, the next sound impulse may be released; on the other hand, the magnitude of the resistance 271 determines the latest moment when, after each sound emission, the next sound impulse is released.

The relay 221 not only operates the transmitting contact 231, but it is also provided with an alternating contact 331 which, in its inoperative position, illustrated in the drawing, keeps the charging circuit of the time giver condenser 61 closed. When the relay 221 is excited, i. e. with each sound emission, the contact 331 is reversed for a short period and short-circuits the condenser 61, whereupon the charging operation starts again.

Fig. 5 shows a modification of the connection illustrated in Fig. 4. In this case, the second time circuit resistance 281 is not switched on by each echo, but merely, if the distance from which the echo arrives is reduced below a certain minimum. Switching on is effected by means of a relay 341 to which the measuring voltage is constantly applied just as to the tube voltmeter 11. In the example illustrated, the relay 341 is directly connected to the tube voltmeter 11. If the distance or the measuring voltage is reduced below this certain minimum, the relay contact 351 will fall off and will switch on the second time circuit resistance 281. When the distance and the measuring voltage excced the corresponding limit value, the contact 351 is attracted and thereby the time circuit resistance 281 is switched off again.

The action of the connections according to Figs. 1 to 3 and 5 considerably differs from that illustrated in Fig. 4 owing to the fact that the succession of soundings is not continuously regulatable between two limits, as in that case, but adjusts itself merely by suddenly changing over to the rapid or slow succession of soundings. Otherwise, the device according to Fig. 5 operates in the same way as that according to Fig. 4.

Instead of a regulation by jumps, a continuous regulation of the time constant or of the time circuit resistance or time circuit condenser may be provided. For this purpose, for example, a selenium cell may be used as charging resistance,

the resistance value of which is regulatable by a light ray controlled by the echo.

Another modification of the connections illustrated in Figs. 4 and 5 might be effected by leaving away the second time circuit resistance 281 and the respective switching device and by providing the relay 221 with a second winding by means of which the echo causes the relay 221 to respond with a delay of about ½ second. In this case, the time circuit condenser 261 must be short-circuited by a special relay contact and thus started again.

It would be possible to regulate the time constant by varying the circuit capacity instead of by varying the time circuit resistance.

Fig. 6 shows a further connection for graded variation of the succession of soundings. In this case, an interval between the soundings is inserted by interrupting the transmitting and receiving circuit each time when, after a certain period of say 0.8 sec., no echo has arrived after the immediately preceding transmitting impulse. For this purpose, the transmitting circuit has a second pair of contacts 42 in series with the pair of contacts 3 and belonging to a relay 52, which is influenced by the receiver circuit, in a way to be described later on, so that a transmitting impulse is suppressed each time when the echo has not arrived within 0.8 sec. after the emission of a sound.

By means of the echo relay 10, the arriving echo connects to the voltmeter a rotating potentiometer 72 passing through zero at the moment of the sound emission. The echo relay 10 is operated from the receiver 92 via the amplifier 102.

The rotating potentiometer 72 performs 60 revolutions per minute, the same as the impulse transmitter 2. One revolution of the rotating potentiometer or the total voltage passed through by the potentiometer corresponds to a running time of the sound of one second or a measuring range of 0 to 150 metres altitude. The voltmeter 11 has a corresponding scale for 0 to 150 metres altitude. In order that the potentiometer voltage applied by the echo contact 10 to the voltmeter should not be retained at the voltmeter for any length of time, even if no more echoes should arrive, for example owing to the fact that the range of action of the echo sounding instrument has been exceeded, there is provided a special time circuit 122, 132, 142 with a tippling tube 152 connected in parallel with the time circuit condenser 122. The condenser 122 is earthed via the receiver and thus discharged at each arrival of an echo by a polarized relay 162 provided at the output of the amplifier. If several echoes fail to arrive, the condenser 122 is charged so far that the ignition voltage of the discharge tube 152 is reached. The current impulse passing through the discharge tube 152 when tipping, operates a relay 172 which applies to the voltmeter 11 a voltage exceeding the measuring voltage range. The measuring pointer of the voltmeter thus jumps to a specially marked scale range, which shows the observer that the echo has repeatedly failed to arrive.

The polarized relay 162 also ensures that each time only the first echo is indicated, whereas, especially when flying low, the frequently occurring re-echoes are suppressed. Only upon the next sound emission, the polarized relay is returned into the position for switching on and thus the amplifier is connected up again.

In the input of the amplifier there is another relay contact 218 corresponding to the relay contact 42 of the transmitting circuit for disconnecting the receiving circuit if the echo has not arrived within 0.8 sec. after the sound emission. This disconnection is, however, not effected immedialy after 0.8 sec. has elapsed, but is merely prepared after this interval and is only effected immediately before the next operation of the transmitting contacts 3. This is done by means of the following connection.

The relay 52 with the relay contacts 42 and 218 is provided with a holding coil 192 and with a switching coil 220. In the circuit of the holding coil there is a source of direct current 212, a series resistance 222, and the switching contact 232 of a polarized relay. This relay is provided with two relay coils 242 and 252, one of which serves for opening and the other for closing the holding circuit.

The holding circuit is opened by the arriving echo, though not by each echo, but merely by echoes arriving within 0.8 sec. after the sound emission. After this interval has elapsed, the circuit of the coil 242 is made ineffective up to the next operation of the transmitting contacts by short-circuiting via a resistance by means of a cam disc 262 and contacts 272, so that the coil 242 cannot be excited by echoes arriving within this period.

The holding circuit is closed by means of a cam disc 282 and 292 operating in equal time with the cam disc 2 and the transmitting contacts 3.

The switching coil 220 regularly receives a short switching current impulse shortly before the next operation of the transmitting contacts, for example with a lead of 5° before the next operation of the transmitting contacts, by means of a cam disc 302 and contacts 312 from a source of current 322. This current impulse is effected, according to the position of the relay contacts 42 and 218, in one or the other direction, this reversal of the direction being attained by means of two further contacts 332 and 342 operated by the relay 52.

The action of the device is as follows:

It is assumed that a sound impulse has been emitted at the last operation of the transmitting contacts 3 by means of the cam disc 2, but that, for example owing to flying at an altitude of more than 120 metres, the echo did not arrive before 0.8 sec. had elapsed after the sound emission or that it failed to arrive at all. In this case, the contacts will be, shortly before the next sound emission, in the position shown in the drawing. The armature of the relay 52 with the contacts 42, 218, 332, and 342 are assumed to have fallen off. Then, the circuit of the switching coil 220 is prepared by the relay contacts 332, 342 in such a way that, upon closing of the contacts 312, a current impulse passes through the switching coil 220 in the direction indicated by the arrow, so that the armature will be attracted. It is assumed, for example, that the echo belonging to the preceding sound impulse, owing to flying at an altitude of more than 120 metres, did not arrive before 0.8 sec. had elapsed or that it failed to arrive at all. The holding circuit is closed as the echo did not arrive within the given period. The armature attracted by the switching coil 220 is, therefore, held in the attracted position. Thus, the transmitting circuit is interrupted upon the following operation of the transmitting contacts, and the next sound impulse will be left out. The receiving system is also made ineffec-

tive by the opening of the contact 218, and the circuit of the switching coil 220 is reversed. Consequently, after a further revolution, the switching coil will receive a current impulse in opposite direction, causing the armature to fall off again and thereby connecting the transmitter and the receiving system. The next impulse is emitted, and the receiving system is ready to receive again. Thus, after a suppressed impulse, the transmitting and receiving plant is regularly connected again at the next operating period.

If, at the next impulse emission, the altitude of flight is 120 metres, the echo will arrive before 0.8 sec. has elapsed and will disconnect the holding coil 192. Consequently, the next current impulse will attract the relay contacts by means of the switching coil 220. However, these contacts will fall off again as soon as the current impulse has disappeared, as the holding coil 192 is without current, and there will be no suppression of the next transmitting impulse and no disconnection of the receiving system. Therefore, the suppression of the transmitting impulse only occurs when the echo of the preceding sound impulse has not arrived up to a certain moment, for example 0.8 sec. after the sound emission, that is, only if there is a danger of the echo not arriving until after the next operation of the transmitting contacts from an altitude of more than 120 metres and of falling into the next measurement. The indication itself remains perfectly uninfluenced by these occurrences, that it, it is only altered by means of the relay 172, if no echoes have arrived for several seconds.

The insertion of sounding impulses, if echoes fail to arrive within a given interval, may also be combined with an arrangement for increasing the succession of soundings when echoes arrive at small altitudes. The range within which the echo must have arrived, if no sounding intervals are to be inserted, may be chosen variously; for example, it may extend near to the next operation of the transmitting contacts. Instead of by reversing the switching coil, the connection of the transmitter and the receiving system may be effected in another way, for example by means of a time circuit, especially if no mechanical time giver, but an electric time circuit is used for starting the impulse and for measuring the time. In this case, it is possible to suppress several successive impulses. Thus, the receiver could also be disconnected for a longer period that need not be equal to the time during which the impulses are left out.

Figs. 7 to 12 show further examples for regulating the succession of soundings by time circuits or tipping devices. The regulation of the succession of soundings is in that case effected by varying the tipping frequency.

The receiver 92 acts via an amplifier 373 upon the relay tube 383. For measuring the time, the discharging or charging operation of the time circuit 61, 71, 81 started with the sound emission is used, whose condenser voltage is applied to the voltmeter 11 by the echo relay 10. The measuring range of the indicating device extends from 0 to 200 metres altitude.

The sensitivity of the relay tube 383 is regulated by a time circuit 393 in such a way that it gradually increases from a minimum value at the sound emission to a maximum value at about 0.5 sec. after the sound emission, corresponding to an altitude of 80 metres, retaining this maximum value up to the next sound emission. When flying over a badly reflecting surface, such as a forest or powder snow, it may be necessary to increase the sensitivity rapidly so that the echoes are still indicated at altitudes of more than 80 metres.

The transmitter 1 is excited by the closing of the transmitting contacts 233. The transmitting contacts 233 are operated by a relay coil 403 which receives a short current impulse from a condenser 413 via a gas discharge tube 293 each time the ignition voltage is exceeded. The condenser 413 is constantly connected via charging resistance 423 to a source of voltage of, for example, 200 volts, so that the condenser, immediately after having been discharged, is charged again via the glow tube 293 and the transmitting relay 403 in order to be discharged again and to emit a fresh sound impulse when the ignition voltage of the tube 293 is reached. In this case, the time constant of the transmitting circuit 413, 423, 433 is 2 sec.$^{-1}$. As long as no echo arrives, a sound impulse is emitted every 2 seconds according to this time constant.

But, as soon as an echo arrives, this succession of soundings is changed. In the constructional example illustrated in Fig. 7, the change is effected by suddenly connecting the condenser 413 of the transmitting time circuit to a larger condenser 453 by means of a relay 443 operated by the echo and thereby bringing it to the voltage of this larger condenser. The large condenser 453 is charged with a voltage of, for example, 90 volts at the moment of the sound emission by closing a contact 463 belonging to the transmitting relay 403, and is then discharged via a resistance 473. It is obvious that, as long as the condenser 413 shows a smaller voltage than the condenser 453, the parallel connection of the condenser 453 will effect a sudden increase in the voltage of the condenser 413, this jump being the greater, the earlier the echo arrives. The discharge of the condenser 413 and accordingly the succession of soundings will thus be accelerated at the arrival of the echo, the acceleration decreasing with increasing running time of the sound. The curve 483 in Fig. 8 shows the time between two soundings depending upon the altitude. It will be seen from this, that the sounding period of 0.3 sec. constantly increases at the altitude zero in an approximately straight line up to 2 seconds, and then it remains unchanged at 2 seconds. The straight line 493, Fig. 8, passing through zero, represents the running time of the sound depending upon the altitude of flight. The difference curve 503 illustrates the period $\Delta t$ between the mere running time of the sound or the arrival of the echo and the next sound emission. This delay of the sound emission, compared with the theoretically quickest possible emission, immediately after the arrival of the echo, increases constantly with the running time of the sound or with the altitude of flight, as will be seen from the course of the curve 503, until the total sounding period reaches the maximum duration of 2 seconds.

The increase of the retardation time $\Delta t$ in the connection described serves to prevent the measurement from being influenced by any disturbing impulses. If such a delay of transmission were not provided, a disturbing impulse might cause continuous overlapping of the indication. For, if a disturbing impulse occurs before the arrival of an echo, it must be prevented that the sound impulse released thereby is actually emitted before the arrival of the expected echo. However, it is only necessary to consider those

disturbing impulses which occur within the period of about 0.5 sec. up to the following sound emission, as only after 0.5 sec. from each sound emission the receiver has a sensitivity sufficient for disturbing impulses to be indicated and to influence the transmitting circuit. Therefore, in order to avoid overlapping of the indication being caused by disturbing impulses, it is merely necessary to make the transmitting delay equal to or greater than the greatest possible interval between an effective disturbing impulse and the echo to be expected from the preceding sound impulse. Thus, there results as minimum time of delay the period between the earliest possible disturbing impulse, that is about 0.5 sec. after the sound emission, and the latest moment for the arrival of the echo, that is 1.2 sec. after the sound emission, corresponding to an altitude of 200 metres. From Fig. 8 it will be seen that this time of delay actually exists in the example. Thus, the danger of overlapping owing to disturbing impulses is prevented. The time of delay $\Delta t$ increasing with the running time of the sound furthermore has the advantage that jumping places in the ground, for example gasometers, at which the sound impulse produces echoes from different distances, cannot cause continuous overlapping of the indication. On the contrary, the increasing time of delay automatically causes such a disturbance to disappear after a few successions of soundings.

In order to prevent echoes, at an altitude of more than 200 metres, from producing an indication, the polarized relay **513** (Fig. 7) is provided, which disconnects the receiver **92** by means of a time circuit **523** with glow tube **533** each time 1.2 sec. after the sound emission, unless the next sound impulse has in the meantime been emitted, and which connects the receiver again at a sound emission by means of a return coil **543** influenced by the transmitting circuit.

The receiver **92** may also be disconnected from the amplifier by each echo by means of a further relay coil **925**, in case the receiver was still connected on arrival of the echo, in order to make the reception ineffective for re-echoes which frequently arrive after the first echo.

As illustrated in Fig. 9, the transmitting relay may also be excited by two separate tipping circuits **553**, **563**, of which the circuit **553** has a fixed adjustment and only operates when the other tipping circuit **563** has not tipped within, for example, 2.2 seconds. The time constant of the tipping circuit **563** is, however, not invariable, but is regulated by the echo. The condenser **573** of this tipping circuit is connected at the sound emission by a relay **583** to a discharging resistance **593**, via which it is discharged from the quenching voltage of the tipping circuit **563**, for example 80 volts. On the arrival of the echo, the condenser **573** is connected by the relay **583** via the resistance **603** to a source of charging current **613** of, for example, 200 volts and is then charged up to the ignition voltage of the tipping circuit **563**, for example 100 volts. It is obvious that the period from the arrival of the echo up to reaching the ignition voltage is the longer, the later the echo arrives, as the voltage of the condenser **573** up to the arrival of the echo decreases owing to the discharge via the resistance **593** the more, the later the echo arrives. Thereby it is attained that the time of delay $\Delta t$ increases with the running time of the sound or with the altitude, as will be seen from the curves **623** and **633** in Fig. 10.

In the constructional example illustrated in Fig. 11, the transmitting arrangement is substantially as in the constructional example according to Fig. 7. As in that case, there are provided a transmitting time circuit **413**, **423**, **433** with a tipping tube **293** and a transmitting relay **403**, **233** as well as an additional time circuit **453**, **473**, whose condenser **453** is charged at the sound emission to a voltage which is lower than the ignition voltage of the relay **293**, resulting in an auxiliary voltage decreasing with the running time of the sound, which auxiliary voltage is connected by the echo by means of a relay **623'** parallel to the condenser **413** of the transmitting time circuit, thereby accelerating the charging and the emission of the next sound impulse to an extent decreasing with the running time of the sound.

The introduction of the auxiliary voltage or of the condenser **453** is, however, not effected, as in the constructional example according to Fig. 7, by each echo arriving within the measuring range (1.2 sec. corresponding to 0 to 200 metres), but only by echoes arriving within the range of 0 to 0.5 sec. corresponding to an altitude of 0 to 80 metres. For this purpose, the accelerating relay **623'** is not connected directly to the receiver or amplifier, but is inserted in a tipping circuit **633'**, **643** which is closed by a relay **653** operated by the echo. The condenser **633'** of the tipping circuit is charged at the sound emission by means of a transmitting relay contact **663** with a voltage which is higher than the ignition voltage of the glow tube **643**, for example 200 volts, and is thereupon discharged via a resistance **673** so that the voltage of the condenser at about 0.5 sec. after the sound emission will be below the ignition voltage of, for example, 100 volts. Thereafter, no tipping is effected when the echo contact is closed, and the acceleration relay **623'** remains uninfluenced by the echo. Consequently, no acceleration of the sound emission can be effected by the echo after 0.5 sec., the succession of soundings being only determined by the time constant of the actual transmitting time circuit **413**, **423**, **433**, which, for example, may amount to 1.3 sec. Therefore, one sound impulse is emitted every 1.3 sec., which substantially corresponds to the measuring or scale range of 0 to 200 metres.

Moreover, an arrangement is made to also prevent the emission of a sound impulse after 1.3 sec., in case the echo to be expected has not arrived up to, for example, 1.2 sec. after the sound emission. This is to prevent the echo from arriving after the fresh sound emission and thereby simulating at the next measuring an echo at a smaller altitude and causing the succession of soundings to be accelerated. In order to avoid this, the next sound emission must be postponed until an effective echo cannot arrive anymore. The insertion of such a pause in sounding is effected by discharging the condenser **413** of the transmitting time circuit by a tipping circuit **683**, **693** by means of a relay **713** in the tipping circuit down to a voltage which is lower than the ignition voltage, for example 30 volts, possibly by applying a corresponding source of voltage **723** to the condenser **413**. The tipping circuit **683**, **693** is regularly started at a sound emission by a transmitting relay contact **703** and will tip 1.2 sec. after each sound emission. At the same time, the condenser **683** of

the tipping circuit will be completely discharged by means of a contact 733 belonging to the tipping relay 713. Owing to being only partly discharged down to 30 volts, in spite of the time constant of the transmitting time circuit being greater, the condenser 413 will now reach the ignition voltage earlier than the tipping circuit condenser 633, namely after about 1.0 sec., whereas the tipping circuit owing to the complete discharge of the condenser 683, will require another 1.2 sec. until the next tipping. But then it cannot prevent any more the tipping of the transmitting tipping circuit and the emission of the sound impulse.

In order that the insertion of the pause in sounding by means of the tipping circuit 683, 693 is only effected in case the expected echo has not arrived before the tipping, the coil of the tipping relay 713 is short-circuited at the arrival of the echo by means of a polarized relay 743 with a return coil 753 to be excited by the transmitting impulse, and is thus made ineffective until the next sound emission.

In the tipping circuit 683, 693 there is also included the coil 763 of a polarized relay 773, whereby the receiver is disconnected each time the circuit 683, 693 is tipped, namely 1.2 sec. after each sound emission, until being connected again by a return coil 783 operated by the next transmitting impulse. Thus it is avoided that echoes, arriving at an altitude exceeding 200 metres, may influence the receiver and the indication. Apart from the wrong indication produced by such an echo, this is also not desired for the reason that the charging circuit used for measuring the time and the altitude is further charged up to the next sound emission and thus acquires voltages exceeding the voltage range of the voltmeter used.

The receiver is also disconnected by each echo by means of an additional relay coil 793, in case it is still connected on arrival of the echo, in order to make the receiver ineffective for the re-echoes which frequently arrive after the first echo.

The sensitivity of the receiving device is regulated in the same way as with the constructional example illustrated in Fig. 7.

With the connection described, a period of sounding is obtained which, as illustrated by the curve 803 in Fig. 12, rises in the range of the altitudes of 0 to 80 metres from about 0.3 sec. to 1.3 sec. (section *a*), which remains constant in the range of the altitudes of 80 to 200 metres (section *b*), and which, for echoes in the range of the altitudes above 200 metres, jumps to 2.3 sec. (section *c*). Also with this regulation of the succession of soundings, the disturbing impulses cannot cause overlapping of the indication. In the range of 0 to 80 metres, disturbing impulses do not become effective, owing to the decreased sensitivity of the receiver. Above 80 metres, the succession of soundings cannot be influenced when the ignition voltage of the tipping circuit 633, 643 operating the acceleration relay 623 is exceeded.

It is not necessary that the degree of amplification or the sensitivity of the receiver is regulated as described. For, it is also an advantage to use a retardation period according to the invention in case the sensitivity of the receiver is invariable. This advantage consists in the fact that the range of disturbances is decreased according to the chosen retardation of the transmission or to the range of constant succession of soundings.

In case of continuous variation of the succession of soundings over the entire measuring range, it is furthermore not necessary also to let the retardation increase over the entire measuring range, but the retardation may gradually decrease again from the altitude, for which the sum of the running time of the sound and the period of retardation is equal to the running time of the sound corresponding to the entire measuring range, up to the end of the measuring range of altitudes. Finally, it is also possible to adjust the sensitivity, in the lower range with the succession of soundings regulated by the echo, to such a small value that disturbing impulses cannot become effective, and to change to a constant succession of soundings when a greater altitude of flight is reached for which a higher sensitivity is required for indicating the echoes.

Fig. 13 shows another constructional example of a connection with graded variation of the succession of soundings and with a rotating potentiometer 6, 7, 8 (cf. Fig. 1). Again there are provided two contacts 3 and 4 in the transmitting circuit 400 for operating the transmitter, which contacts are closed for short periods by the rotating cam disc 2. The contact 4, which is displaced with regard to contact 3 by 180°, may be disconnected by the switch 5. In this way, the succession of soundings may be reduced to one half.

In the transmitting circuit 400 there are also provided two switches or contacts 74 and 84 serving to prevent the next sound emission in case the echo of the last sound emission has not returned yet. These two switches are operated by current impulse relays 94 and 104 which throw the contact 74 or 84 with each current impulse. The relay 94 is operated at each sound emission, whereas the relay 104 is operated at each arrival of an echo. As will be easily understood, this serves to interrupt the transmitting circuit for one operation of the transmitting contacts each time when, up to this operation of the transmitting contacts, the echo of the preceding sounding signal has not arrived and not operated the switch 84 yet. Correspondingly, the circuit 114 of the receiver 92 is interrupted by switches 134 and 144, which are operated in the same way as the switches 74 and 84 by the relays 94 and 104, in case the expected echo has not arrived before the next operation of the transmitting contact. Thus, overlapping of the indication is prevented.

In the input of the amplifier 154 for the echo there is also inserted a polarized relay 162 which, upon arrival of an echo, disconnects the receiving circuit 114, and which connects it again at the next sound emission. Thus, re-echoes are prevented from being indicated.

To the output of the amplifier a number of echo relays are connected. The relay 10 serves for releasing the indication of the altitude as in Fig. 1.

Changing over from one succession of soundings to the other or operating the switch for the succession of soundings is effected by a relay 244 according to the altitude of flight.

The relay 244 is in the anode circuit of an electron tube 254, in whose grid circuit there is, besides a constant negative bias, a control voltage depending upon the altitude of flight and supplied, in the example illustrated, by a condenser 274.

In order to avoid that the succession of soundings is changed with each quickly passing reduction of the altitude of flight, for example when flying over a building or owing to a disturbing

impulse in the low range of indication, the voltage at the regulating condenser 274 adjusts itself with delay to the value corresponding to the smaller altitude when the altitude decreases. The condenser 274 receives its voltage from a second larger condenser 284, whose voltage, upon arrival of an echo, is brought to a value corresponding to the respective altitude of flight by means of an echo relay 294 connecting the condenser 284 for a short period to a larger condenser 304, which, upon sound emission, is charged by means of a cam disc 314 via contacts 324 or 334, 344 to, for example, 50 volts, and is then discharged up to the next sound emission via a resistance 354. The voltage of the condenser 304 at the moment of the arrival of an echo, received via the echo relay 294 by condenser 284, is therefore a measure for the running time of the sound or for the altitude of flight. The greater the altitude is, the lower will be the voltage. This voltage is supplied with delay to the regulating condenser 274 via a resistance 364 as far as it exceeds the voltage of the regulating condenser. The voltage, which depends upon the altitude, may be received by the rotating potentiometer, by the indicator 11, or by a special rotating potentiometer, instead of by a time circuit.

The voltage of the condenser 284 decreases with increasing altitude of flight and thus sinks below the voltage of the regulating condenser. In order that the change to slow succession of soundings should not also be effected with delay, which would increase the danger of overlapping, the retarding connection consisting of the R-C-combination 274, 364 (a combination of ohm resistance and capacity) operates together with a rectifier 374 in such a way that the time constant is smaller for the discharge of the regulating condenser 274 than for the charge. If the voltage of the condenser 274 sinks below a certain limit, the anode current exciting the relay 244 will not be sufficient to hold the contacts 5, 9, 344. The contacts for regulating the succession of soundings will fall off and change the transmitter and the receiver or the potentiometer to slow succession of soundings.

At the same time, the current impulse relay 94 controlled by the cam disc 634 and the device mostly provided for the time regulation of the degree of amplification controlled by a cam disc 384 are changed over to the slower succession of soundings by additional relay contacts 394 and 404.

In order to obtain an immediate change to slow succession of soundings, also in case no echo has arrived up to the next operation of the transmitting contact when using the rapid succession of soundings, a cam disc 414 is provided, which short-circuits the regulating condenser 274 shortly before the transmitting contact is operated, in case the echo to be expected from the last sounding signal has not yet arrived and not interrupted the short circuiting circuit by means of a polarized relay 424 to be returned upon a sound emission. This changing is effected only if one relay contact 106 of the relay is closed, that is, if rapid succession of soundings is used.

Fig. 14 shows a slowly or with delay operating regulation of the succession of soundings for an echo sounding device in which the succession of soundings is not determined by the number of revolutions of a cam shaft, but by the tipping frequency of an electric tipping device. In this case the succession of soundings is regulated by varying the tipping frequency. The illustration merely shows that part of the connection which is important for regulating the succession of soundings.

The tipping device consists of a condenser 435 which is started upon a sound emission by short-circuiting and which is charged via a resistance 445 up to the next sound emission. The condenser serves for unlocking an electron tube 455 in whose anode circuit there is a relay 475 operating the transmitting contact 465.

The tipping frequency is regulated by an adjustment of the negative bias in the grid circuit of the tipping tube 455 according to the altitude. This bias is supplied by a condenser 485 in the cathode circuit, which condenser, similar to the condenser 274 in the connection illustrated in Fig. 13, is discharged with delay when the altitude of flight decreases, and which is charged without delay to a higher voltage when the altitude of flight increases. The discharge is effected via a resistance 495 to a voltage adjusting itself to the respective altitude of flight upon arrival of an echo. This voltage is supplied by the cathode resistance 505 of an electron tube 515 controlled by a smaller condenser 535 which, upon arrival of an echo, is connected for a short period by a relay 525 to the tipping circuit condenser 435, thus receiving the voltage of this condenser at the moment of the arrival of the echo. A resistance 545 is connected parallel to the tube 515. The residual current, which, at the altitude zero and the grid voltage zero, flows through the tube 515 and the resistance 545, determines the minimum voltage at the resistance 505 and at the regulating condenser 485 and thus the maximum speed of the succession of soundings.

The tipping circuit condenser 435 is used not only for controlling the succession of soundings, and the regulation of the succession of soundings, but also as time giver, and the condenser 535 receiving the voltage of the condenser 435 upon arrival of an echo is used for retaining this measuring voltage at the voltmeter or altimeter 11. The charging of the regulating condenser 435 with increasing distance is accelerated, instead of by providing a rectifier (cf. Fig. 13), by conducting the anode current of the tipping tube 455 upon arrival of the echo via the transmitting relay 475, and before arrival of the echo via a relay 555. This changing over is effected by a polarized relay 565 which, upon sound emission, connects the relay 555, and upon arrival of the echo, connects the transmitting relay 475 to the anode circuit of the tipping tube 455. The relay 555 may be constructed so as to respond to the same anode current as the transmitting relay 475. As, owing to the retarded charging of the regulating condenser 485 with increasing altitude of flight, the anode current will reach the same value in the following sounding period only a little later than in the preceding sounding period, the relay 555 will, at a somewhat rapid increase of altitude, respond before the anode current is changed over to the transmitting relay 475 by the echo now arriving later. Therefore, the relay 555 will suddenly apply a higher voltage to the regulating condenser 485 whereby the anode current is reduced. The anode circuit will, at a later moment, reach the magnitude required for responding and will, if the echo has arrived in the meantime, operate the transmitting relay 475. The higher voltage to be applied by the relay 555 to the regulating condenser 485 for slowing

down the succession of soundings with increasing altitude of flight is supplied by a condenser 575, which is kept at a constant voltage by the anode voltage of the tube 555. This determines the minimum speed of the succession of soundings.

In order to operate the transmitter even if echoes fail to arrive, a second tipping tube 585 constructed as electron tube with a second transmitting relay 595 is provided. The negative bias of this tube is supplied by the condenser 575 so that the device, if echoes fail to arrive, will operate with the slowest succession of soundings, provided that the two tubes 455 and 585 are equal and that the transmitting relays 475 and 595 require the same anode current for responding. Each of the two transmitting relays 475 and 595 is provided with a second contact 605 and 615 for short-circuiting or re-starting the tipping circuit and the time giver condenser 435.

The receiving system is constructed similar to that illustrated in Fig. 13. In the present connection, the insertion of sounding pauses could, for example, be effected by supplying the second tipping tube, which operates when echoes fail to arrive, with a correspondingly high cathode voltage.

Instead of applying the regulating voltage to the same circuit as that of the tipping circuit condenser, it is possible, as shown in Fig. 15, to apply it to a second grid 645 of the tipping tube 655. The regulating voltage could also act via the grid of a charging tube upon the transmitting time circuit.

The retardation connection for supplying the voltage regulating the succession of soundings may consist, instead of an R-C-combination (Ohm resistance and capacity), of an R-L-combination (Ohm resistance and inductance).

In the connections illustrated in Figs. 13 to 15, the retardation, as mean value, extends over an interval preferably comprising several sounding periods. The arrangement may also be made so that the succession of soundings follows after the decrease of the distance with a certain delay which may also depend upon the altitude or its increase without forming a mean value or any other mutual influencing of the individual distance values, whereas, with increasing distance, the succession of soundings adjusts itself substantially unretarded according to the greater distance. If, in this case, for example, the retardation is made equal or greater than one sounding period, any disturbing impulses, occurring during this period and simulating an echo from smaller distances, cannot disturb the succession of soundings as the correct echo arriving later will compensate the action of these disturbing impulses.

In the connection according to Fig. 13, the retardation as mean value in regulating the succession of soundings depending upon the altitude may be obtained at another place, for example in the switching relay 244 itself. This or a similar retardation may also be used in the connections according to Figs. 11, 16, and 17 in a corresponding way.

Fig. 16 shows a tipping device with two tipping circuits 724 and 734 adjusted to different tipping frequencies. In the common part of the two tipping circuits, the transmitting relay 744 is inserted. Upon a sound emission, the tipping circuit 724 is disconnected from the transmitting relay 744 by a polarized relay 754 and is connected to a relay 764. Only an arrival of an echo, the tipping circuit 724 is closed via the transmitting relay 744. The tipping tubes are constructed as electron tubes 774 and 784, and are controlled by a common tipping circuit condenser 794.

As will be easily seen, the tipping circuit 724 will only act upon the transmitting relay 744 if the echo arrives before the tube 784 is tipped. Otherwise, the transmitting relay is operated by the tipping circuit 734.

If the echo has not arrived up to the tipping of the tube 774, the relay 764 will be excited by the anode current and will disconnect the receiver or will remove the preparedness for indicating. This moment is chosen so as to coincide with the lapse of the running time of the sound corresponding to the measuring range. If, for example, the measuring range is 0 to 200 metres altitude, the tipping frequency of the tipping circuit containing the tube 774 will be adjusted to the running time of the sound of about 1.2 sec. corresponding to the measuring range. In case the echo arrives before this period of 1.2 sec. has elapsed, it will find the receiver prepared for indicating, and the next sound emission will be effected when the 1.2 sec. has elapsed. If the echo arrives after the 1.2 sec. has elapsed, but before the tube 734 is tipped, it cannot release an indication, but it will instantaneously cause the transmitting relay to respond by switching the polarized relay 754. Then, the next sound impulse will be emitted at once and the preparedness for indication will be restored. Thus, the tipping circuit 734 determines the slowest, and the tipping circuit 724 the quickest succession of soundings. If, for example, the tipping period of the circuit 734 amounts to 3 sec., the maximum sounding pause will be 3 minus 1.2=1.8 sec. Echoes arriving between 1.2 and 3 sec. will shorten the sounding pause correspondingly.

Fig. 17 shows a connection in which the succession of soundings is slowed down when the altitude changes suddenly, for example when flying over a steep slope or over a building or when disturbing impulses simulate sudden changes of altitude.

The transmitting relay 795 or 804 is excited, in a similar way as in the construction according to Fig. 16, by two separate tipping circuits 814, 824, of which the circuit 814 has a fixed adjustment and is operated only in case the other tipping circuit 824 has not tipped within, for example, 2.2 seconds. The time constant of the tipping circuit 824 is, however, not invariable but is regulated by the echo. The condenser 834 of this tipping circuit is connected to a discharge resistance 854 by a relay 844 upon sound emission, being further discharged via the resistance 854 from the quenching voltage of the tipping circuit 824 of, for example, 80 volts. On arrival of an echo, the condenser 834 is connected to a source of charging current 874 with a voltage of, for example, 200 volts, by means of the relay 844 via the resistance 864, and is then charged up to the ignition voltage of the tipping circuit 824 which, for example, is 100 volts. It is obvious, that the time between the arrival of an echo and the reaching of the ignition voltage is the longer, the later the echo arrives, as the voltage of the condenser 834 will decrease up to the arrival of the echo by the discharge via the resistance 854, the more, the later the echo arrives. Thus, it is attained

that the time of retardation $\Delta t$ increases with the running time of the second or with the altitude of flight, as will be seen from the curves 884 and 894 in Fig. 18.

In case of sudden changes of altitude, the condenser 834 of the tipping circuit 824 will be discharged to a certain extent by closing a contact 904 via a resistance 107, thereby retarding the tipping of the circuit 824 and the sound emission for a corresponding period. The contact 904 is operated by a relay 924, excited by the compensating current between two condensers 934 and 944, which are connected with each other by a contact 954 on arrival of the echo. One of these two condensers is constantly charged via a resistance 964 by a source of voltage 974 and is started again upon each sound emission by a short-circuiting contact 984. In case of sudden changes of altitude or if such a change is simulated by a disturbing impulse, the two condensers show substantially differing voltages upon being connected by closing the echo contact 954, and a compensating current will flow and will excite the relay 924 and retard the tipping of the circuit 824.

The special advantage of this connection is that sudden changes of altitude do not cause overlapping of the indication. Even if, in flying over a house or a steep slope, a sounding impulse is emitted just at the jumping place, so that the same impulse will cause echoes to return at the smaller as well as at the greater altitude, the present method will serve to avoid overlapping, as in this case a jump in the indication or a difference in the voltage influencing the succession of soundings will occur regularly.

The magnitude of the retardation may also be made dependent upon the time within which the echo or the disturbing impulse arrives, if, for example as shown in Fig. 17*a*, a condenser 101 started upon sound emission by means of a short-circuiting contact 994 and gradually charged via a resistance 100, is connected parallel to the condenser 834 of the tipping circuit 824 and thus applies its voltage to the latter.

The connection may also be made so that the relay 924 is excited only when a sudden decrease of altitude occurs or is simulated by a disturbing impulse. For this purpose, the two condensers 934 and 944 may, as illustrated in Fig. 17*b*, be connected with each other via rectifiers 102 and 103 in such a way that through the relay 924 only one compensating current can return from the condenser 944 to the condenser 934, whereas the voltages of the two condensers are compensated in the other directions via a side way with the rectifier 103. The arrangement of the rectifier might, however, also act in the opposite direction, as indicated by the arrows 105 and 105'.

A succession of soundings controlled by a tipping device may be regulated, instead of by impressing accelerating or retarding voltages or by alternating actions of different tipping devices, in various ways, especially by influencing the other constants of the tipping circuits, such as the capacity and the resistance.

The regulation of the succession of soundings may also be used in combination with other devices, for example operating in the way of stop watches or indicating devices in which a revolving time giver will be caused to act on arrival of an echo, and which either serves itself as indicating member or brings a visible sign, resting on the scale of distances according to its present position, into action.

Simultaneously with the regulation of the succession of soundings, an automatically operated variation of the measuring range may be provided. If it is desired to avoid a change of the measuring range, but at the same time to obtain a high measuring accuracy, especially in the distance range which is of interest, a correspondingly irregular scale may be provided.

Finally, the methods described for regulating the succession of soundings may be used independently of each other as well as in various combinations.

In order to avoid, in controlling the sound emission by several time circuits or other time members, an undesired mutual influencing of the different regulating voltages produced by the time circuit connections, a connection, as illustrated in Fig. 19, may be used. In this case, 287 is the relay serving to operate the transmitter. The relay 287 is in the anode circuit of a tube 297 which is controlled by time circuit voltages in the grid circuit. Two condensers 307, 317 are provided in the grid circuit of the tube, both of which are short-circuited for a short period upon the sound emission by contacts 327 and are thereby brought to the voltage zero. The condenser 307 is constantly connected via a resistance 337 to a source of charging current 347, whereas the condenser 317 is connected via a second resistance 367 to a source of charging current only by the arriving echo by means of a polarized relay 357 opened upon a sound emission. The two condensers are connected via rectifiers 705, 607 to the grid of the tube 297, and owing to this connection, the grid can only be acted upon by the condenser with the higher voltage, whereas the condenser with the lower voltage is locked by the rectifier. The two charging circuits formed by the resistances 337, 367 and the condensers 307, 317 are operated by the correspondingly rated resistances and capacities with different time constants. The curve 377 in Fig. 20 may, for example, illustrate the charging curve of the condenser 307. If an echo arrives after the time $t$, the second time circuit 317, 367 will be started by connecting the polarized relay 307. This circuit is charged more rapidly according to its smaller time constant and will reach the limiting voltage 387, required for the transmitting relay 287 to respond, earlier than the first time circuit. The charging curve of the second time circuit is illustrated by the curve 397. As will be seen from this, the transmitting relay will be caused to respond on arrival of an echo according to a retardation time $\Delta t$ only determined by the time constant of the second time circuit 317, 367, provided that the responding voltage is reached by the second time circuit earlier than by the first time circuit. If no echo arrives, the transmitting relay will be caused to respond after a time $t_1$ corresponding to a multiple of the retardation time $\Delta t$ of the second time circuit.

Finally, a grid controlled electron tube may be used in the various connections instead of the gas discharge tubes, in which case the tube current of the transmitting relay, when exceeding a certain current limit, will cause the relay to respond. Fig. 21 shows such a connection corresponding to that illustrated in Fig. 7. As in that case, the magnitude of the resistance 318 and of the capacity of the condenser 328 determines the time of the succession of soundings of, for example, about 1.8 sec. in case an echo fails to arrive or if the altitude of flight exceeds the measuring range of the scale. Upon a sound emission,

the contact 348 will apply to the condenser 338 a voltage of, for example, 14 volts, which will sink owing to discharge via the resistance 358 according to the time constant determined by the magnitude of the resistance 358 and of the condenser 338. On arrival of an echo, the condenser 328 will receive an additional charge from the condenser 338 which, by the relay 368 operated by the echo, will be connected to the condenser 328 for a short period. This additional charge will be large in case of a small altitude of flight, and it will be small in case of a great altitude. By suitably chosen condensers, resistances, and voltages, a regulation of the succession of soundings according to curve 483 (Fig. 8) may be adjusted.

The positive pole of the regulating voltage of the condenser 328 is connected to the grid of an electron tube 378, in whose anode circuit the coil 388 of the transmitting relay is inserted, operating the transmitting contact 398 as well as the contacts 348 and 408 for starting the time circuits. The transmitting relay will respond when a certain current value is exceeded.

The relay coil 388 forms the bridge of a bridge connection, in which the tube 378 together with a cathode resistance 428 forms one of the four bridge arm resistances 438, 448, 458 and (378+428). By this connection it is attained that fluctuations in the anode voltage 468 will not influence the bridge current flowing through the relay 388 and will therefore not disturb the regulation. The condensers 328 and 338 are charged by the voltage of the board system which is stabilized by an iron-hydrogen resistance.

ROBERT WELLENSTEIN.
WERNER HOLLE.

PUBLISHED
MAY 18, 1943.
BY A. P. C.

R. WELLENSTEIN ET AL
DEVICE FOR MEASURING DISTANCES BY THE ECHO SOUNDING METHOD
Filed Dec. 29, 1939

Serial No.
311,694

9 Sheets-Sheet 1

FIG. 1.

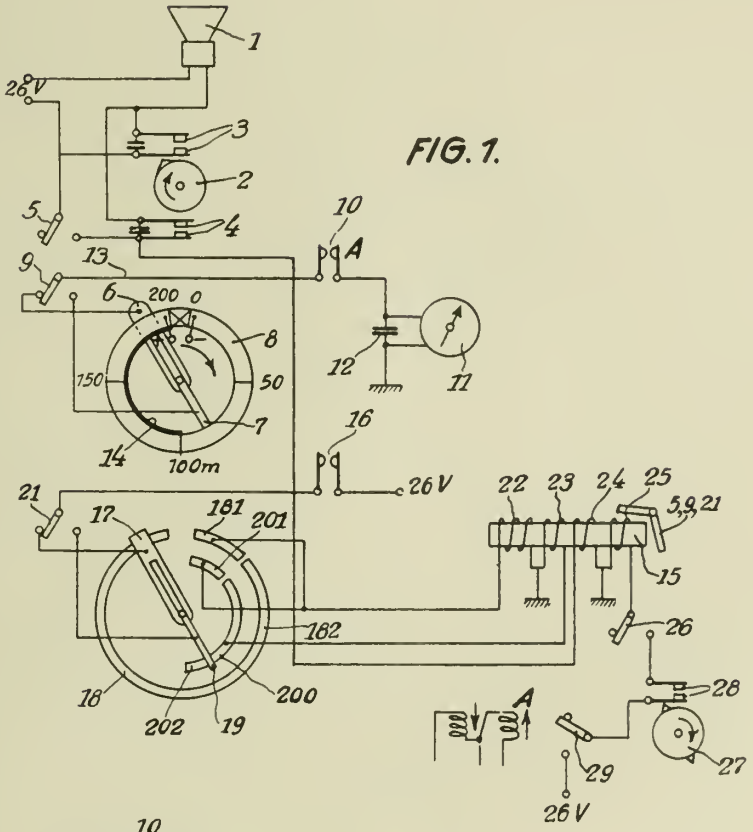


FIG. 2.

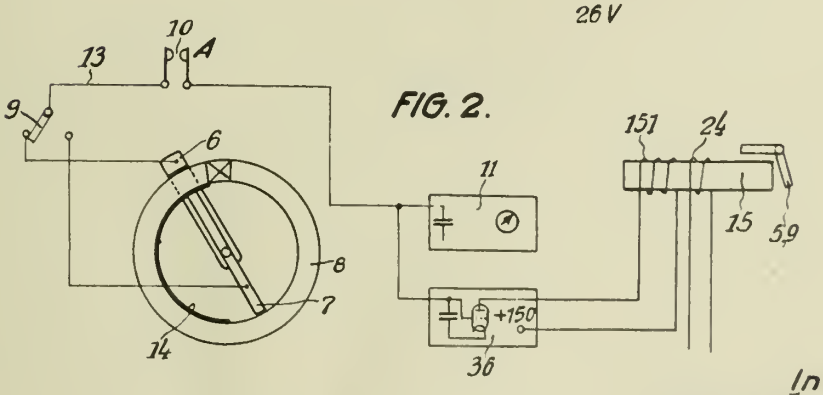


Inventors,
R. Wellenstein
& W. Holle
By:
Glascock Downing & Seebold
Attorneys.

PUBLISHED
MAY 18, 1943.
BY A. P. C.

R. WELLENSTEIN ET AL
DEVICE FOR MEASURING DISTANCES BY THE ECHO SOUNDING METHOD
Filed Dec. 29, 1939

Serial No.
311,694
9 Sheets-Sheet 2

FIG. 3.

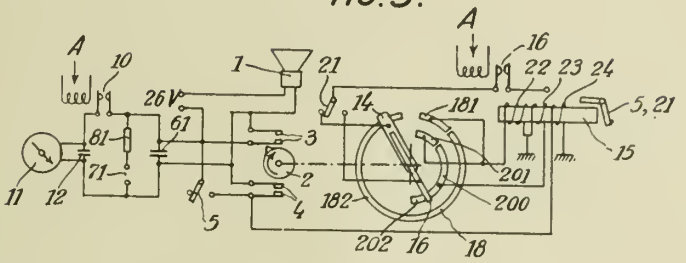


FIG. 4.

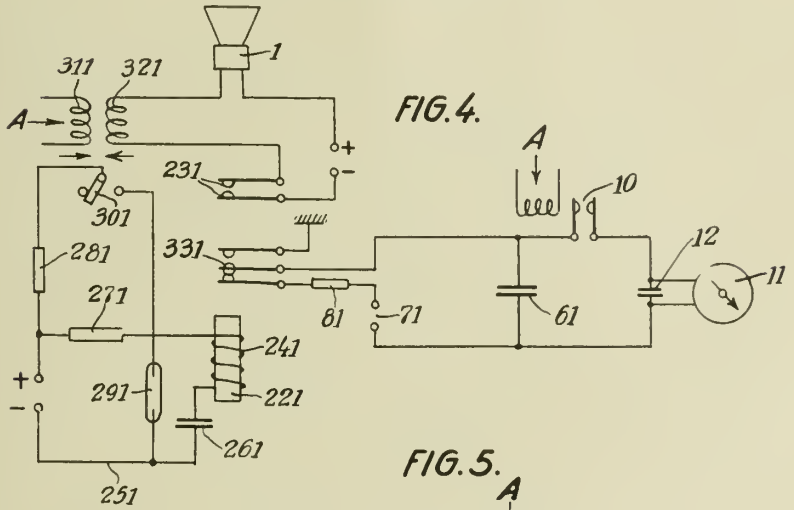


FIG. 5.

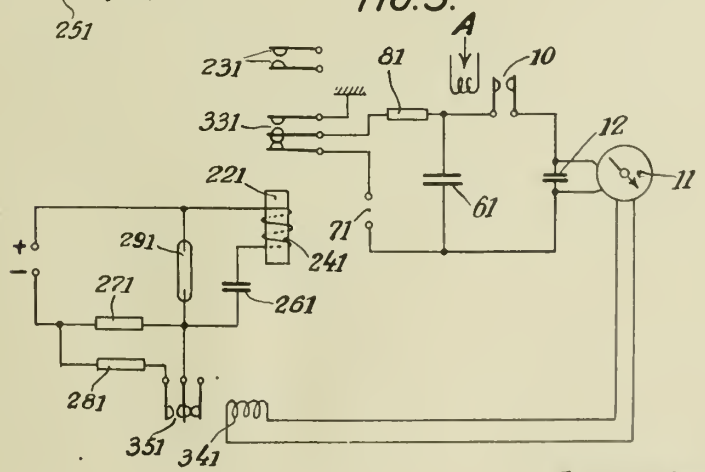


Inventors
R. Wellenstein
W. Holle

By: Glascock Downing & Seibold
Attorneys

PUBLISHED
MAY 18, 1943.
BY A. P. C.

R. WELLENSTEIN ET AL
DEVICE FOR MEASURING DISTANCES BY THE ECHO SOUNDING METHOD
Filed Dec. 29, 1939

Serial No.
311,694
9 Sheets-Sheet 3

FIG. 6.

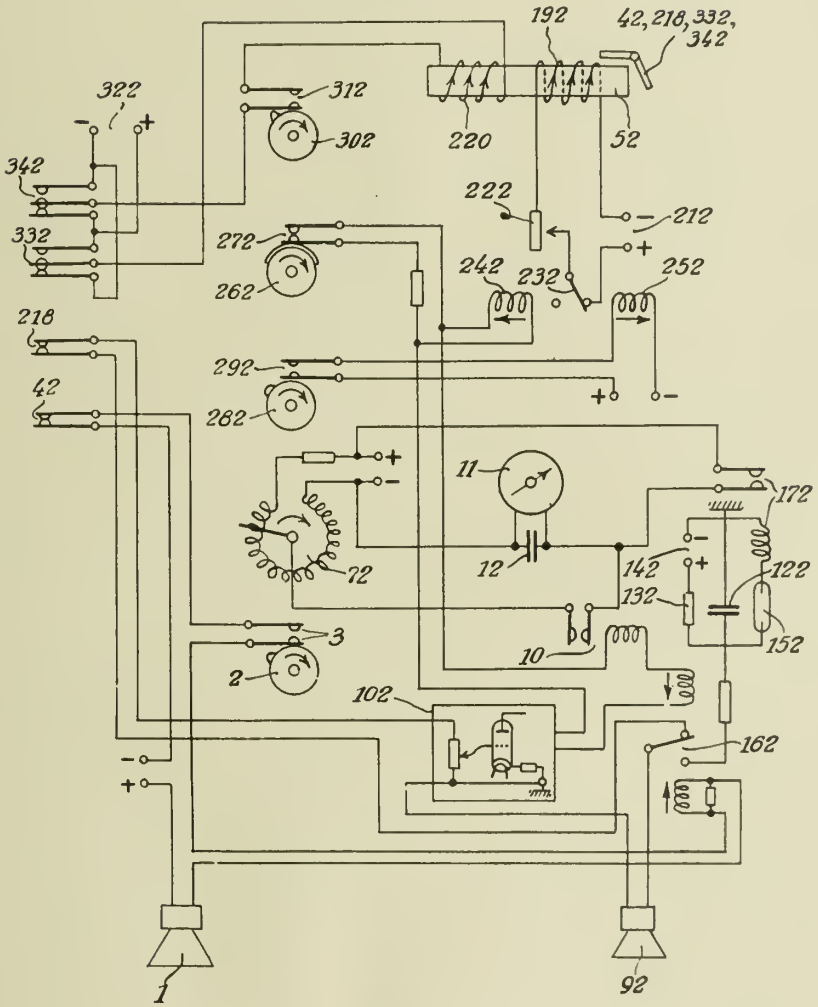


Inventors,
R. Wellenstein &
W. Holle
By:
Glascock Downing & Seebold
Attorneys.

PUBLISHED
MAY 18, 1943.
BY A. P. C.

R. WELLENSTEIN ET AL
DEVICE FOR MEASURING DISTANCES BY THE ECHO SOUNDING METHOD
Filed Dec. 29, 1939

Serial No.
311,694
9 Sheets-Sheet 4

FIG. 7.

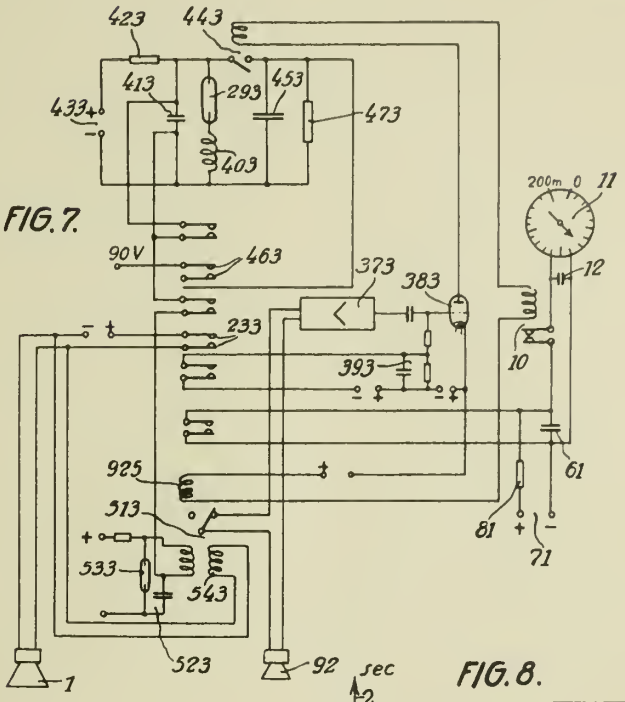


FIG. 8.

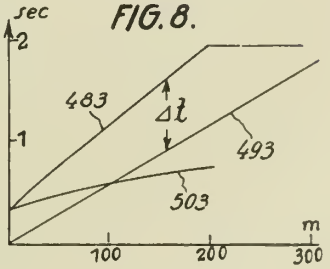


FIG. 9.

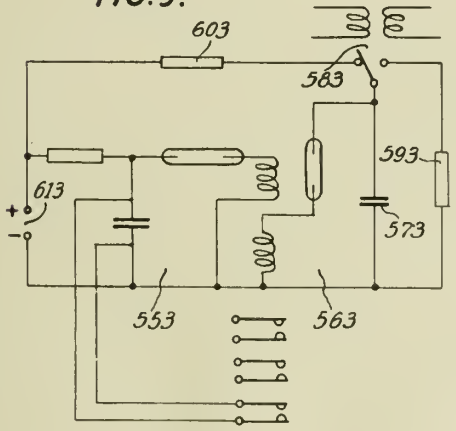


FIG. 10.

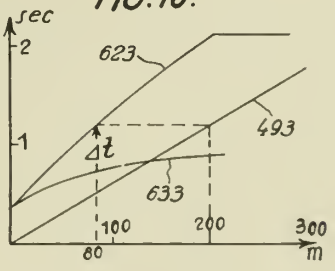


Inventors
R. Wellenstein &
W. Holle
By:
Glascock Downing & Seibold
Attorneys

PUBLISHED
MAY 18, 1943.
BY A. P. C.

R. WELLENSTEIN ET AL
DEVICE FOR MEASURING DISTANCES BY THE ECHO SOUNDING METHOD
Filed Dec. 29, 1939

Serial No.
311,694
9 Sheets-Sheet 5

FIG. 11.

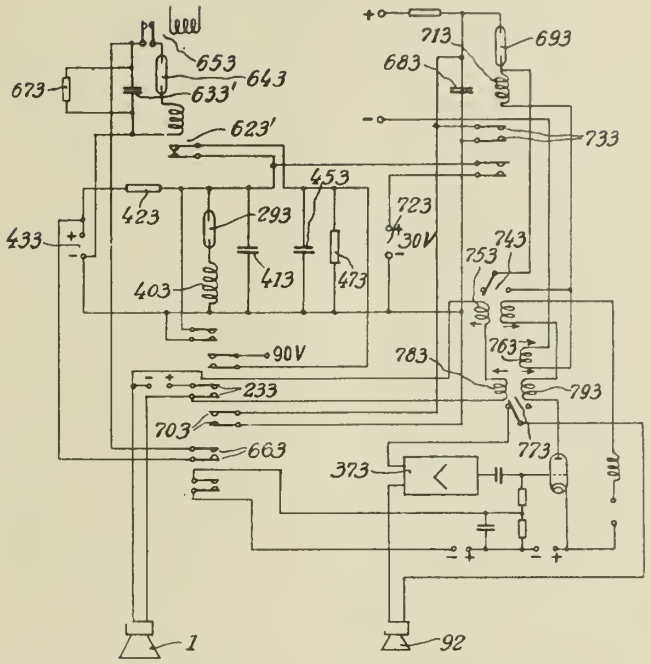


FIG. 12.

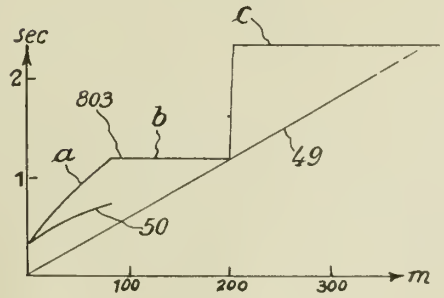


Inventors,
R. Wellenstein &
W. Holle
By:
Glascock Downing & Seibold
Attorneys.

PUBLISHED
MAY 18, 1943.
BY A. P. C.

R. WELLENSTEIN ET AL
DEVICE FOR MEASURING DISTANCES BY THE ECHO SOUNDING METHOD
Filed Dec. 29, 1939

Serial No.
311,694
9 Sheets-Sheet 6

FIG. 13.

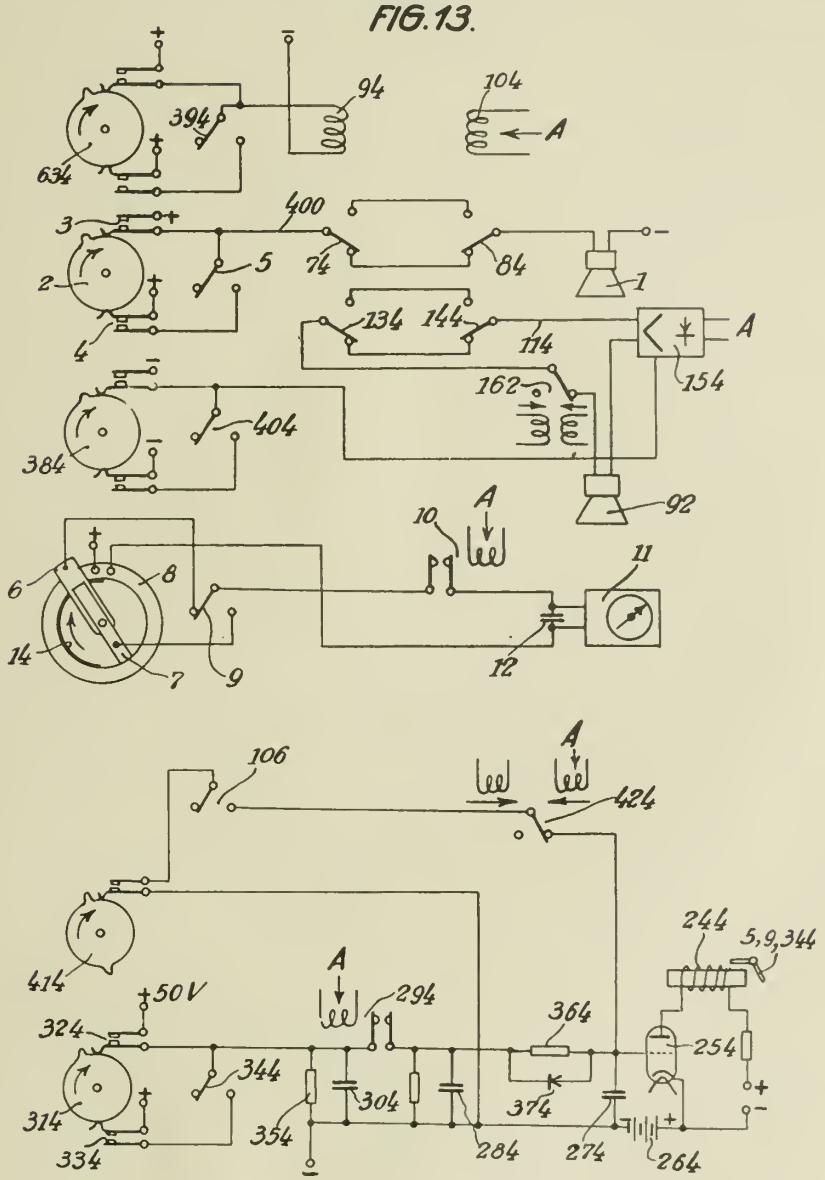


Inventors,
R. Wellenstein &
W. Holle
By:
Glascock Downing & Seebold
Attorneys.

PUBLISHED
MAY 18, 1943.
BY A. P. C.

R. WELLENSTEIN ET AL
DEVICE FOR MEASURING DISTANCES BY THE ECHO SOUNDING METHOD
Filed Dec. 29, 1939

Serial No.
311,694
9 Sheets-Sheet 7

FIG. 14

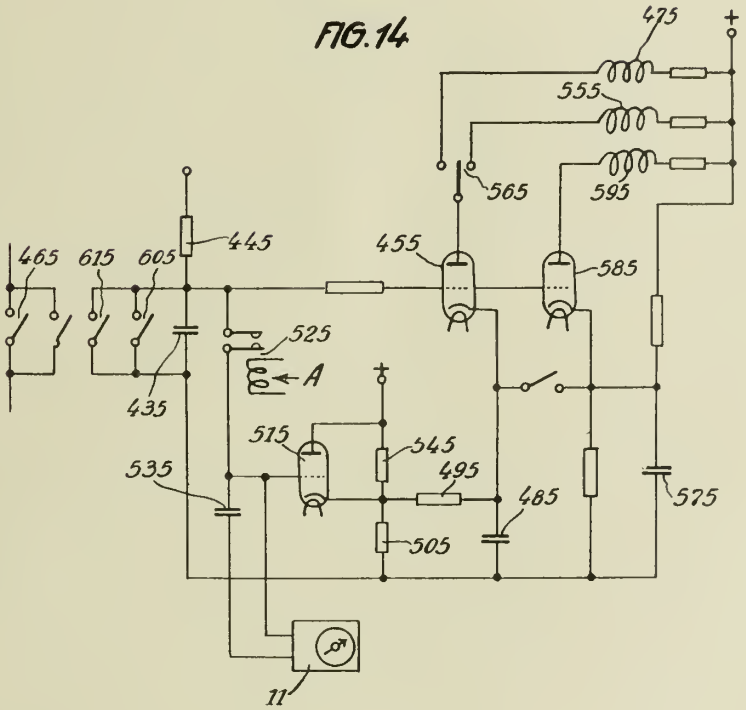


FIG. 15.

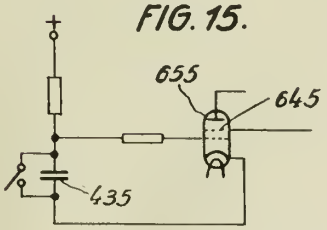


Inventors,
R. Wellenstein &
W. Holle
By:
Glascock Downing & Seibold
Attorneys.

PUBLISHED
MAY 18, 1943.
BY A. P. C.

R. WELLENSTEIN ET AL
DEVICE FOR MEASURING DISTANCES BY THE ECHO SOUNDING METHOD
Filed Dec. 29, 1939

Serial No.
311,694
9 Sheets-Sheet 8

FIG. 16.

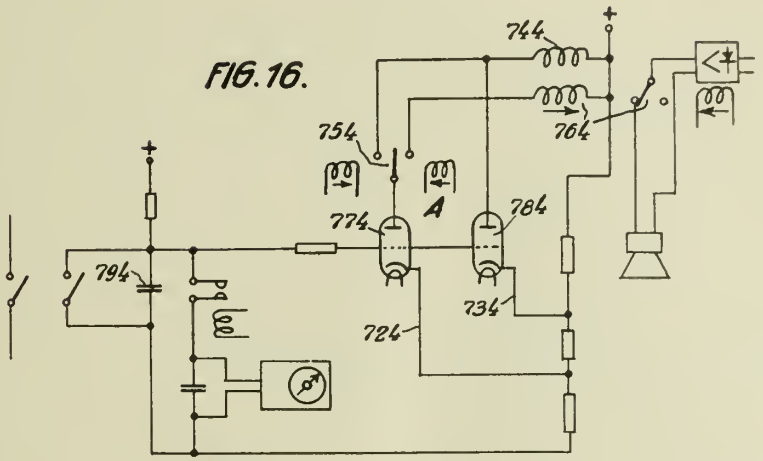


FIG. 17.

FIG. 17a.

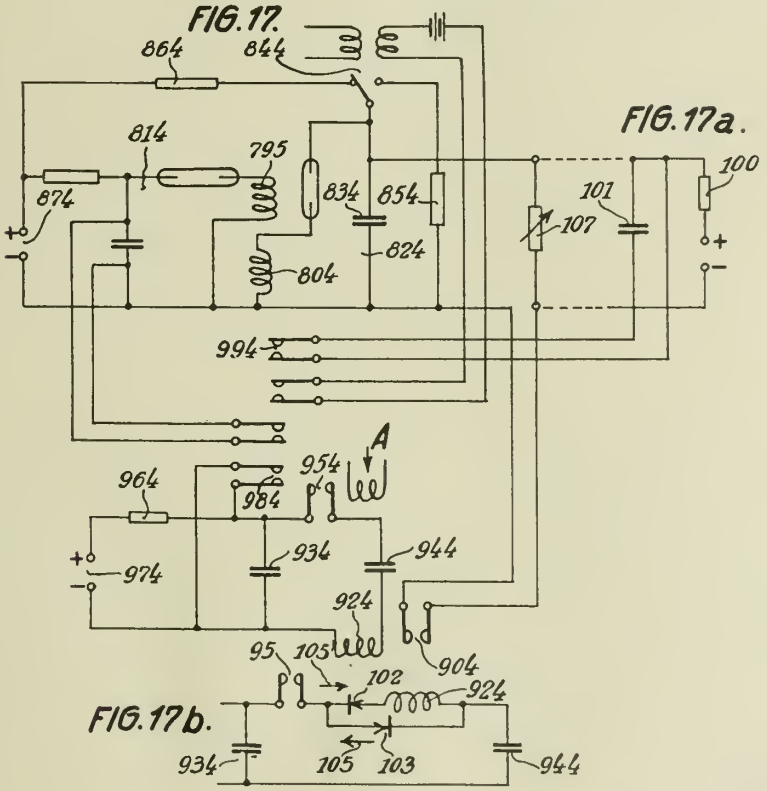


FIG. 17b.

Inventors
R. Wellenstein
A. W. Hotle
By: Glascock Downing & Seebold
Attorneys.

PUBLISHED
MAY 18, 1943.
BY A. P. C.

R. WELLENSTEIN ET AL
DEVICE FOR MEASURING DISTANCES BY THE ECHO SOUNDING METHOD
Filed Dec. 29, 1939

Serial No.
311,694
9 Sheets-Sheet 9

FIG. 18.

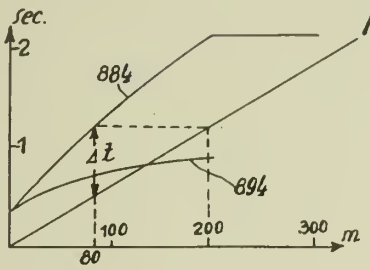


FIG. 19.

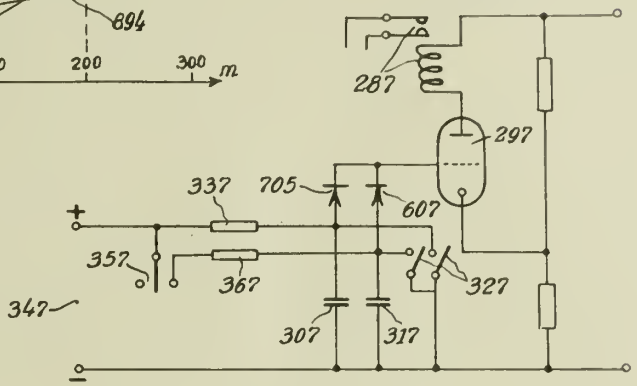


FIG. 20.

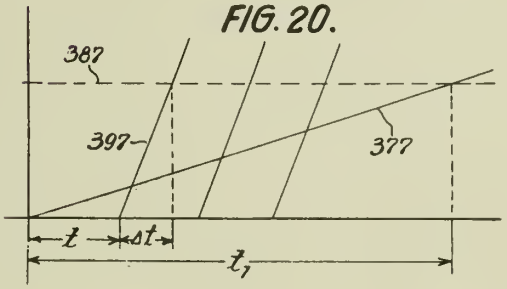


FIG. 21.

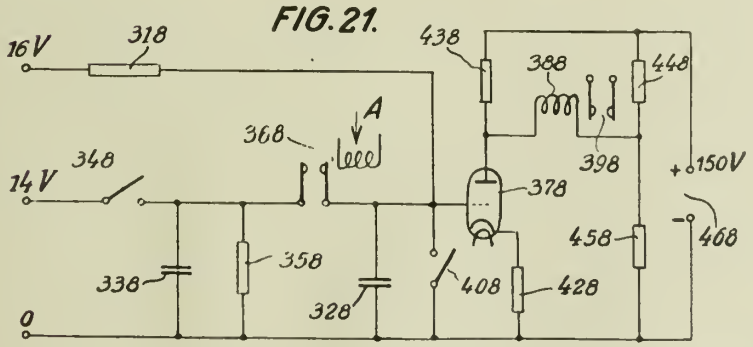


Inventors,
R. Wellenstein

By:
Glascock Downing & Seibold
Attorneys.